TRANSIT
WHAT'S NEW

- New 3.5L PFDi V6 (998) engine3.5L EcoBoost(99G) and 2.0L EcoBlue® Bi-Turbo I4 Diesel (99A) engine and Biodiesel Engine Prep Package (98B)
- New 10-speed transmission (44U) replaces the 6-speed transmission
- Revised Weights and Model Lineup
- Added Crew Van (201A) to the Transit program
- AWD optional for 3.5 and 3.5GTDI (4600 Lb front GAWR standard)
- Dual front passenger seat/new front console Cargo Van, C/C
- Added 4-way front swivel seat data
- Extended range fuel tank optional for both GAS and DIESEL
- 11,000 GVWR for CC/CA in optional to 10,360 GVWR
- Exhaust exit moved to pass side-- all models
- Revised front/dash airbag keep-out zone
- Increased AWD DRW rear track
- New wheels for AWD/DRW are not interchangeable
- ADAS- Driver Assist System "Field of View Zones" – Located in the Transit BEMM

TRANSIT
INDEX

TRANSIT | Page

What's New 1
Index 2
Introduction 3

MODEL LINEUP

PASSENGER WAGON RWB, LOW ROOF & MEDIUM ROOF 4
PASSENGER WAGON LWB, LOW ROOF & MEDIUM ROOF 5
PASSENGER WAGON LWB, HIGH ROOF 6
VAN RWB, LOW ROOF & MEDIUM ROOF 7
VAN LWB, LOW ROOF & MEDIUM ROOF 8
VAN LWB, HIGH ROOF 9
CHASSIS CAB,LOW ROOF 10
CUTAWAY-LOW ROOF 11

DIMENSIONAL DATA

REGULAR WB 8-PASSENGER WAGON 12
REGULAR WB 10-PASSENGER WAGON 13
REGULAR WB 12-PASSENGER WAGON 14
LONG WB 12-PASSENGER WAGON 15
LONG WB 15-PASSENGER WAGON 16
EXTENDED LENGTH LONG WB 15-PASSENGER WAGON 17
2-PASSENGER VAN 18
WAGON / VAN 19
WAGON / VAN 20
138" WB CHASSIS CAB / CUTAWAY 21
156" WB CHASSIS CAB / CUTAWAY 22
178" WB CHASSIS CAB / CUTAWAY 23
CHASSIS CAB / CUTAWAY 24

REAR FRAME EXTENSION CHASSIS CAB / CUTAWAY 25
SECOND UNIT BODY MOUNTING 26
BACK OF CAB MOUNTING HOLES CUTAWAY 27
FUEL TANKS ALL MODELS 28
REAR AXLE TRACK DIMENSIONS SRW & DRW 29
EXHAUST EXTENSION KIT CHASSIS CAB / CUTAWAY 30

TRANSIT | Page

FRONT SURFACE AREA WORKSHEET
CHASSIS CAB / CUTAWAY 31
FRONT SURFACE AREA WORKSHEET
CHASSIS CAB / CUTAWAY (CONT'D) 32
SEAT H-POINT ALL MODELS 33
AIRBAG OCCUPANT PROTECTION ZONES TYPICAL 34

ELECTRICAL

TRAILER TOW WIRING HARNESS 35
SEIC / PTO OPERATIONS 36
SEIC / PTO OPERATIONS (CONT'D) 37
SEIC / PTO OPERATIONS (CONT'D) 38
SEIC / PTO SCHEMATICS 39
SEIC / PTO CIRCUIT DESCRIPTIONS 40
SEIC / PTO CIRCUIT DESCRIPTIONS (CONT'D) 41

CHANGE CONTROL 42

WARNING:
During the production and servicing of these vehicles, due care should be taken to avoid damaging of safety or emissions related systems such as the braking system, fuel lines, sensors, catalysts, etc. through contacting them while working on adjacent areas of the vehicle. Inadvertent damage can also occur due to adjacent welding/cutting operations, people standing near/on unprotected systems while performing other tasks.

Important Notices

The information described herein is believed to be correct at the time of publication, but accuracy cannot be guaranteed. Ford reserves the right to discontinue models or change specifications or designs at any time without notice and without incurring any obligation.

Representations regarding the compliance of any Ford-manufactured incomplete vehicle to any rule, regulation or standard issued pursuant to the National Traffic and Motor Vehicle Safety Act or the Canadian Motor Vehicle Safety Act are set forth only in the Incomplete Vehicle Manual (IVM) which accompanies each incomplete vehicle.

Regulations such as those issued by the Federal Highway Administration (FHA) or issued pursuant to the Occupational Safety and Health Act (OSHA), and/or state, provincial, and local laws and regulations may require installation of additional equipment for the particular use intended for the vehicle. It is the responsibility of the subsequent stage manufacturer or completed vehicle alterer and the vehicle purchaser to ascertain how the vehicle will ultimately be used, if FHA, OSHA or state provincial or local regulations apply and how the vehicle as completed will comply with those requirements. Nothing contained herein is to be construed as a representation that such equipment required for the particular use intended has been installed on the completed or incomplete vehicle.

Reference Information

Ford Body Builder Advisory Service Publications

This document is an example of a program-specific Body Builders Layout Book (BBLB) published by the Ford Body Builder Advisory Service (BBAS) team. Each Ford Commercial Truck vehicle line has a similar document that aims to provide detailed information which may be of interest to a subsequent-stage manufacturer or alterer.

The Ford Transit and Transit Connect also have a Body and Equipment Mounting Manual (BEMM), which is a comprehensive resource dedicated to body and equipment mounting information.

Yet another source of program-specific information are the "Vehicle Specification" documents available on the Ford BBAS website. Information typically found in these documents are: vehicle curb and accessory weights, vehicle dimensions, component descriptions, capacities, GAWRs, alternator output, powertrain output and gear ratios.

In addition to the program-specific documents, there are several Ford BBLB documents that contain general best practices or information on specific subjects that span multiple vehicle lines. These include:

- General BBLB - contains Definitions, Design Recommendations and Vehicle Storage Guidelines.
- Snow Plow BBLB
- Pickup Box Removal BBLB

These publications are updated every model year and can be accessed via the web at https://fordbbas.com under "Publications". For BBLB and BEMM documents, expand the "Body Builder Layout Book" Section to view all available documents. For Vehicle Specifications, expand the "Vehicle Specifications" section. The website search function can be used to filter for specific content or vehicle line.

Ford Body Builder Advisory Service Bulletins

Occasionally, the Ford BBAS team will create an SVE "Bulletin" to address a specific issue or distribute important information in a timely manner. These documents can be accessed via the web at https://fordbbas.com under "Bulletins". The website search function can be used to filter for specific content or vehicle line.

If applicable, information from each SVE bulletin will be incorporated into the appropriate BBLB document the following model year. In some cases, SVE bulletins will continue to be referenced in this document.

Ford Body Builder Advisory Service Contact

The Ford Truck Body Builder Advisory Service may be consulted if questions regarding the completion of Ford commercial vehicles are not adequately addressed in the documentation described above. For assistance call (877) 840-4338 or e-mail via the web at https://fordbbas.com under "Contact Us" and select "General Questions".

For Ford vehicle CAD requests, please visit https://fordbbas.com, select "Contact Us" and then "CAD Request".

For both Questions and CAD Requests, please be as specific as possible with the request details to assure the most accurate and timely response.

Ford Service Publications

Ford Service Technical Resources (including wiring diagrams, repair manuals and diagnostic tool support) are available by subscription via the Motorcraft website: www.motorcraftservice.com

The following publications are examples of digital and printed manuals which are available from Helm Incorporated; call 1-800-782-4356 or contact Helm, Inc. at their website www.helminc.com:

- Ford Truck Shop Manuals
- Ford Towing Manuals
- Ford Wiring Diagrams

TRANSIT
MODEL LINEUP
WAGON REGULAR WHEELBASE

GVWR/PAYLOAD/ARC/GAWR/BASE CURB WEIGHT - Wagon Regular WB, Low Roof (82.2")

Wheelbase	Engine	Max. GVWR (lbs)	Max. Payload (lbs)	ARC Weight (lbs)	Max. Std. Spring Select GAWR		Base Curb Weight (lbs)			RWD or AWD
					Front	Rear	Front	Rear	Total	
130	3.5L PFDI	8550	2860	1399	4130	5070	3047	2584	5631	RWD
130	3.5L PFDI	8550	2630	1174	4380	5070	3252	2604	5856	AWD

GVWR/PAYLOAD/ARC/GAWR/BASE CURB WEIGHT - Wagon Regular WB, Medium Roof (98.7")

Wheelbase	Engine	Max. GVWR (lbs)	Max. Payload (lbs)	ARC Weight (lbs)	Max. Std. Spring Select GAWR		Base Curb Weight (lbs)			RWD or AWD
					Front	Rear	Front	Rear	Total	
130	3.5L PFDI	8550	2670	1215	4130	5070	3085	2730	5815	RWD
130	3.5L PFDI	8550	2440	990	4380	5070	3290	2750	6040	AWD

TRANSIT
MODEL LINEUP
WAGON LONG WHEELBASE

GVWR/PAYLOAD/ARC/GAWR/BASE CURB WEIGHT - Wagon Long WB, Low Roof (82.4")

Wheelbase	Engine	Max. GVWR (lbs)	Max. Payload (lbs)	ARC Weight (lbs)	Max. Std. Spring Select GAWR		Base Curb Weight (lbs)			RWD or AWD
					Front	Rear	Front	Rear	Total	
148	2.0L Diesel	9250	2860	1109	4465	5780	3433	2888	6321	RWD
148	3.5L PFDI	9250	3160	1407	4130	5780	3213	2810	6023	RWD
148	3.5L EcoBoost	9250	3080	1325	4130	5780	3279	2826	6105	RWD
148	3.5L PFDI	9250	2920	1171	4465	5780	3422	2838	6259	AWD
148	3.5L EcoBoost	9250	2840	1092	4465	5780	3485	2853	6338	AWD
148	3.5L PFDI	9550	3220	1021	4465	5830	3422	2838	6259	AWD
148	3.5L EcoBoost	9550	3140	942	4465	5830	3485	2853	6338	AWD
148	3.5L PFDI	9400	3310	1107	4130	5780	3213	2810	6023	RWD
148	3.5L EcoBoost	9400	3230	1025	4130	5780	3279	2826	6105	RWD

GVWR/PAYLOAD/ARC/GAWR/BASE CURB WEIGHT - Wagon Long WB, Medium Roof (99.2")

Wheelbase	Engine	Max. GVWR (lbs)	Max. Payload (lbs)	ARC Weight (lbs)	Max. Std. Spring Select GAWR		Base Curb Weight (lbs)			RWD or AWD
					Front	Rear	Front	Rear	Total	
148	2.0L Diesel	9250	2730	979	4465	5780	3464	2987	6451	RWD
148	3.5L PFDI	9250	3030	1278	4130	5780	3252	2900	6152	RWD
148	3.5L EcoBoost	9250	2950	1195	4130	5780	3317	2918	6235	RWD
148	3.5L PFDI	9250	2790	1042	4465	5780	3460	2928	6388	AWD
148	3.5L EcoBoost	9250	2710	962	4465	5780	3523	2945	6468	AWD
148	3.5L PFDI	9550	3090	885	4465	5830	3466	2929	6395	AWD
148	3.5L EcoBoost	9550	3010	809	4465	5830	3527	2944	6471	AWD
148	3.5L PFDI	9400	3170	971	4130	5780	3258	2902	6159	RWD
148	3.5L EcoBoost	9400	3090	892	4130	5780	3321	2917	6238	RWD
148	2.0L Diesel	9500	2980	779	4465	5830	3474	2977	6451	RWD

TRANSIT
MODEL LINEUP
WAGON LWB & LWB-EL, HIGH ROOF

GVWR/PAYLOAD/ARC/GAWR/BASE CURB WEIGHT - Wagon Long WB, High Roof (108.6")

Wheelbase	Engine	Max. GVWR (lbs)	Max. Payload (lbs)	ARC Weight (lbs)	Max. Std. Spring Select		Base Curb Weight (lbs)			RWD or AWD
					Front	Rear	Front	Rear	Total	
148	2.0L Diesel	9250	2590	839	4465	5780	3472	3119	6591	RWD
148	3.5L PFDI	9250	2880	1132	4130	5780	3257	3041	6298	RWD
148	3.5L EcoBoost	9250	2800	1049	4130	5780	3323	3058	6381	RWD
148	3.5L PFDI	9250	2650	896	4465	5780	3465	3069	6534	AWD
148	3.5L EcoBoost	9250	2570	816	4465	5780	3529	3085	6614	AWD
148	3.5L PFDI	9550	2950	748	4465	5830	3466	3067	6532	AWD
148	3.5L EcoBoost	9550	2870	666	4465	5830	3529	3085	6614	AWD
148	3.5L PFDI	9400	3040	833	4130	5780	3257	3039	6297	RWD
148	3.5L EcoBoost	9400	2950	749	4130	5780	3323	3058	6381	RWD
148	2.0L Diesel	9500	2840	639	4465	5830	3472	3119	6591	RWD

GVWR/PAYLOAD/ARC/GAWR/BASE CURB WEIGHT - Wagon Long WB Extended Length, High Roof (107.7")

Wheelbase	Engine	Max. GVWR (lbs)	Max. Payload (lbs)	ARC Weight (lbs)	Max. Std. Spring Select		Base Curb Weight (lbs)			RWD or AWD
					Front	Rear	Front	Rear	Total	
148	2.0L Diesel	10360	3140	801	4130	6725	3300	3839	7140	RWD
148	3.5L PFDI	10360	3420	1076	4130	6725	3093	3772	6865	RWD
148	3.5L EcoBoost	10360	3340	993	4130	6725	3159	3789	6948	RWD
148	3.5L EcoBoost	10360	3100	754	4465	6725	3365	3822	7187	AWD

TRANSIT
MODEL LINEUP
VAN REGULAR WHEELBASE

GVWR/PAYLOAD/ARC/GAWR/BASE CURB WEIGHT - Van Regular WB, Low Roof (83.6")

CARGO VAN

Wheelbase	Engine	Max. GVWR (lbs)	Max. Payload (lbs)	ARC Weight (lbs)	Max. Std. Spring Select		Base Curb Weight (lbs)			RWD or AWD
					Front	Rear	Front	Rear	Total	
130	2.0L Diesel	9070	3750	2300	4130	5515	3133	2129	5261	RWD
130	3.5L PFDI	9500	4460	2576	4130	5750	2923	2061	4985	RWD
130	3.5L EcoBoost	9500	4380	2495	4130	5750	2989	2078	5066	RWD
130	3.5L PFDI	9500	4230	2351	4630	5750	3128	2081	5210	AWD
130	3.5L EcoBoost	9500	4150	2267	4630	5750	3195	2098	5294	AWD
130	3.5L PFDI	8670	3630	2576	4130	5070	2923	2061	4985	RWD
130	3.5L EcoBoost	8670	3550	2495	4130	5070	2989	2078	5066	RWD
130	3.5L PFDI	8670	3400	2351	4630	5070	3128	2081	5210	AWD
130	3.5L EcoBoost	8670	3320	2267	4630	5070	3195	2098	5294	AWD
130	3.5L PFDI	9070	4030	2576	4130	5515	2923	2061	4985	RWD
130	3.5L EcoBoost	9070	3950	2495	4130	5515	2989	2078	5066	RWD
130	3.5L PFDI	9070	3800	2351	4630	5515	3128	2081	5210	AWD
130	3.5L EcoBoost	9070	3720	2267	4630	5515	3195	2098	5294	AWD

CREW VAN

Wheelbase	Engine	Max. GVWR (lbs)	Max. Payload (lbs)	ARC Weight (lbs)	Max. Std. Spring Select		Base Curb Weight (lbs)			RWD or AWD
					Front	Rear	Front	Rear	Total	
130	3.5L PFDI	8670	3300	2253	4130	5515	3051	2257	5308	RWD
130	3.5L EcoBoost	8670	3220	2172	4130	5515	3116	2273	5389	RWD
130	3.5L PFDI	8670	3080	2028	4630	5515	3256	2277	5533	AWD
130	3.5L EcoBoost	8670	2990	1945	4630	5515	3323	2293	5616	AWD
130	3.5L PFDI	9070	3700	2253	4130	5750	3051	2257	5308	RWD
130	3.5L EcoBoost	9070	3620	2172	4130	5750	3116	2273	5389	RWD
130	3.5L PFDI	9070	3480	2028	4630	5750	3256	2277	5533	AWD
130	3.5L EcoBoost	9070	3390	1945	4630	5750	3323	2293	5616	AWD
130	3.5L PFDI	9250	3880	2253	4130	5750	3051	2257	5308	RWD
130	3.5L EcoBoost	9250	3800	2172	4130	5750	3116	2273	5389	RWD
130	3.5L PFDI	9250	3660	2028	4630	5750	3256	2277	5533	AWD
130	3.5L EcoBoost	9250	3570	1945	4630	5750	3323	2293	5616	AWD

GVWR/PAYLOAD/ARC/GAWR/BASE CURB WEIGHT - Van Regular WB, Medium Roof (100.8")

CARGO VAN

Wheelbase	Engine	Max. GVWR (lbs)	Max. Payload (lbs)	ARC Weight (lbs)	Max. Std. Spring		Base Curb Weight			RWD or AWD
					Front	Rear	Front	Rear	Total	
130	2.0L Diesel	9070	3620	2168	4130	5515	3160	2234	5393	RWD
130	3.5L PFDI	9500	4330	2446	4130	5750	2947	2167	5115	RWD
130	3.5L EcoBoost	9500	4240	2360	4130	5750	3018	2184	5201	RWD
130	3.5L PFDI	9500	4100	2221	4630	5750	3152	2187	5340	AWD
130	3.5L EcoBoost	9500	4010	2132	4630	5750	3224	2204	5429	AWD
130	3.5L PFDI	8670	3500	2446	4130	5070	2947	2167	5115	RWD
130	3.5L EcoBoost	8670	3410	2360	4130	5070	3018	2183	5201	RWD
130	3.5L PFDI	8670	3270	2221	4630	5070	3152	2187	5340	AWD
130	3.5L EcoBoost	8670	3180	2132	4630	5070	3225	2204	5429	AWD
130	3.5L PFDI	9070	3900	2446	4130	5515	2947	2167	5115	RWD
130	3.5L EcoBoost	9070	3810	2360	4130	5515	3018	2183	5201	RWD
130	3.5L PFDI	9070	3670	2221	4630	5515	3152	2187	5340	AWD
130	3.5L EcoBoost	9070	3580	2133	4630	5515	3225	2204	5428	AWD

CREW VAN

Wheelbase	Engine	Max. GVWR (lbs)	Max. Payload (lbs)	ARC Weight (lbs)	Max. Std. Spring		Base Curb Weight			RWD or AWD
					Front	Rear	Front	Rear	Total	
130	3.5L PFDI	8670	3170	2123	4130	5515	3075	2363	5438	RWD
130	3.5L EcoBoost	8670	3090	2037	4130	5515	3146	2379	5524	RWD
130	3.5L PFDI	8670	2950	1898	4630	5515	3280	2383	5663	AWD
130	3.5L EcoBoost	8670	2860	1809	4630	5515	3352	2399	5752	AWD
130	3.5L PFDI	9070	3570	2123	4130	5750	3075	2363	5438	RWD
130	3.5L EcoBoost	9070	3490	2037	4130	5750	3146	2378	5524	RWD
130	3.5L PFDI	9070	3350	1899	4630	5750	3280	2383	5662	AWD
130	3.5L EcoBoost	9070	3260	1810	4630	5750	3352	2399	5751	AWD
130	3.5L PFDI	9250	3750	2123	4130	5750	3075	2363	5438	RWD
130	3.5L EcoBoost	9250	3670	2037	4130	5750	3145	2379	5524	RWD
130	3.5L PFDI	9250	3530	1898	4630	5750	3280	2383	5663	AWD
130	3.5L EcoBoost	9250	3440	1810	4630	5750	3352	2399	5751	AWD

TRANSIT
MODEL LINEUP
VAN LONG WHEELBASE

GVWR/PAYLOAD/ARC/GAWR/BASE CURB WEIGHT - Van Long WB, Low Roof (83.2")

CARGO VAN

Wheelbase	Engine	Max. GVWR (lbs)	Max. Payload (lbs)	ARC Weight (lbs)	Max. Std. Spring Select		Base Curb Weight (lbs)			RWD or AWD
					Front	Rear	Front	Rear	Total	
148	2.0L Diesel	9070	3650	2199	4130	5515	3222	2140	5362	RWD
148	3.5L PFDI	9500	4360	2474	4130	5750	3015	2072	5087	RWD
148	3.5L EcoBoost	9500	4280	2398	4130	5750	3082	2080	5163	RWD
148	3.5L PFDI	9500	4120	2238	4630	5750	3223	2100	5323	AWD
148	3.5L EcoBoost	9500	4050	2166	4630	5750	3289	2107	5395	AWD
148	3.5L PFDI	8670	3530	2474	4130	5070	3015	2072	5087	RWD
148	3.5L EcoBoost	8670	3440	2390	4130	5070	3082	2088	5171	RWD
148	3.5L PFDI	8670	3290	2238	4630	5070	3223	2100	5323	AWD
148	3.5L EcoBoost	8670	3210	2158	4630	5070	3289	2115	5403	AWD
148	3.5L PFDI	9070	3930	2474	4130	5515	3015	2072	5087	RWD
148	3.5L EcoBoost	9070	3840	2389	4130	5515	3081	2090	5172	RWD
148	3.5L PFDI	9070	3690	2238	4630	5515	3223	2100	5323	AWD
148	3.5L EcoBoost	9070	3610	2157	4630	5515	3288	2117	5404	AWD

CREW VAN

Wheelbase	Engine	Max. GVWR (lbs)	Max. Payload (lbs)	ARC Weight (lbs)	Max. Std. Spring Select		Base Curb Weight (lbs)			RWD or AWD
					Front	Rear	Front	Rear	Total	
148	3.5L PFDI	9500	4030	2151	4130	5750	3166	2244	5410	RWD
148	3.5L EcoBoost	9500	3930	2056	4630	5750	3244	2262	5505	RWD
148	3.5L PFDI	9500	3790	1915	4630	5750	3374	2272	5646	AWD
148	3.5L EcoBoost	9500	3720	1843	4630	5750	3440	2279	5718	AWD
148	3.5L PFDI	8670	3200	2151	4130	5070	3166	2244	5410	RWD
148	3.5L EcoBoost	8670	3100	2048	4630	5070	3244	2270	5513	RWD
148	3.5L PFDI	8670	2960	1915	4630	5070	3374	2272	5646	AWD
148	3.5L EcoBoost	8670	2880	1835	4630	5070	3440	2287	5726	AWD
148	2.0L Diesel	9070	3300	1856	4630	5515	3383	2321	5705	RWD
148	3.5L PFDI	9070	3600	2151	4130	5515	3166	2244	5410	RWD
148	3.5L EcoBoost	9070	3500	2047	4630	5515	3243	2272	5514	RWD
148	3.5L PFDI	9070	3360	1915	4630	5515	3374	2272	5646	AWD
148	3.5L EcoBoost	9070	3280	1834	4630	5515	3439	2289	5727	AWD

GVWR/PAYLOAD/ARC/GAWR/BASE CURB WEIGHT - Van Long WB, Medium Roof (100.7")

CARGO VAN

Wheelbase	Engine	Max. GVWR (lbs)	Max. Payload (lbs)	ARC Weight (lbs)	Max. Std. Spring Select		Base Curb Weight (lbs)			RWD or AWD
					Front	Rear	Front	Rear	Total	
148	2.0L Diesel	9070	3500	2052	4130	5515	3259	2250	5509	RWD
148	3.5L PFDI	9500	4210	2326	4130	5750	3051	2184	5235	RWD
148	3.5L EcoBoost	9500	4120	2243	4130	5750	3116	2201	5318	RWD
148	3.5L PFDI	9500	3970	2090	4630	5750	3259	2212	5471	AWD
148	3.5L EcoBoost	9500	3890	2011	4630	5750	3323	2228	5550	AWD
148	3.5L PFDI	8670	3380	2326	4130	5070	3051	2184	5235	RWD
148	3.5L EcoBoost	8670	3290	2243	4130	5070	3116	2201	5318	RWD
148	3.5L PFDI	8670	3140	2090	4630	5070	3259	2212	5471	AWD
148	3.5L EcoBoost	8670	3060	2011	4630	5070	3323	2228	5550	AWD
148	3.5L PFDI	9070	3780	2326	4130	5515	3051	2184	5235	RWD
148	3.5L EcoBoost	9070	3690	2243	4130	5515	3116	2201	5318	RWD
148	3.5L PFDI	9070	3540	2090	4630	5515	3259	2212	5471	AWD
148	3.5L EcoBoost	9070	3460	2011	4630	5515	3323	2228	5550	AWD

CREW VAN

Wheelbase	Engine	Max. GVWR (lbs)	Max. Payload (lbs)	ARC Weight (lbs)	Max. Std. Spring Select		Base Curb Weight (lbs)			RWD or AWD
					Front	Rear	Front	Rear	Total	
148	3.5L PFDI	9500	3880	2003	4130	5750	3202	2356	5558	RWD
148	3.5L EcoBoost	9500	3780	1901	4630	5750	3278	2383	5660	RWD
148	3.5L PFDI	9500	3640	1767	4630	5750	3410	2384	5794	AWD
148	3.5L EcoBoost	9500	3560	1688	4630	5750	3474	2400	5873	AWD
148	3.5L PFDI	8670	3050	2003	4130	5070	3202	2356	5558	RWD
148	3.5L EcoBoost	8670	2950	1901	4630	5070	3278	2383	5660	RWD
148	3.5L PFDI	8670	2810	1767	4630	5070	3410	2384	5794	AWD
148	3.5L EcoBoost	8670	2730	1688	4630	5070	3474	2400	5873	AWD
148	2.0L Diesel	9070	3150	1709	4630	5515	3420	2431	5852	RWD
148	3.5L PFDI	9070	3450	2003	4130	5515	3202	2356	5558	RWD
148	3.5L EcoBoost	9070	3350	1901	4630	5515	3278	2383	5660	RWD
148	3.5L PFDI	9070	3210	1767	4630	5515	3410	2384	5794	AWD
148	3.5L EcoBoost	9070	3130	1688	4630	5515	3474	2400	5873	AWD

TRANSIT
MODEL LINEUP
VAN LWB & LWB-EL, HIGH ROOF

GVWR/PAYLOAD/ARC/GAWR/BASE CURB WEIGHT - Van Long WB, High Roof (110.1")

CARGO VAN

Wheelbase	Engine	Max. GVWR (lbs)	Max. Payload (lbs)	ARC Weight (lbs)	Max. Std. Spring Select		Base Curb Weight (lbs)			RWD or AWD
					Front	Rear	Front	Rear	Total	
148	2.0L Diesel	9070	3410	1959	4130	5515	3286	2315	5602	RWD
148	3.5L PFDI	9500	4110	2231	4130	5750	3077	2253	5330	RWD
148	3.5L EcoBoost	9500	4030	2154	4130	5750	3144	2262	5407	RWD
148	3.5L PFDI	9500	3870	1995	4630	5750	3285	2281	5566	AWD
148	3.5L EcoBoost	9500	3800	1922	4630	5750	3351	2289	5639	AWD
148	3.5L PFDI	9070	3680	2231	4130	5515	3077	2253	5330	RWD
148	3.5L EcoBoost	9070	3600	2148	4130	5515	3144	2268	5413	RWD
148	3.5L PFDI	9070	3440	1995	4630	5515	3285	2281	5566	AWD
148	3.5L EcoBoost	9070	3360	1916	4630	5515	3351	2295	5645	AWD

CREW VAN

Wheelbase	Engine	Max. GVWR (lbs)	Max. Payload (lbs)	ARC Weight (lbs)	Max. Std. Spring Select		Base Curb Weight (lbs)			RWD or AWD
					Front	Rear	Front	Rear	Total	
148	3.5L PFDI	9500	3790	1908	4130	5750	3228	2425	5653	RWD
148	3.5L EcoBoost	9500	3690	1812	4630	5750	3306	2444	5749	RWD
148	3.5L PFDI	9500	3550	1672	4630	5750	3436	2453	5889	AWD
148	3.5L EcoBoost	9500	3470	1599	4630	5750	3502	2461	5962	AWD
148	2.0L Diesel	9070	3060	1616	4630	5515	3448	2497	5945	RWD
148	3.5L PFDI	9070	3360	1908	4130	5515	3228	2425	5653	RWD
148	3.5L EcoBoost	9070	3250	1806	4630	5515	3306	2450	5755	RWD
148	3.5L PFDI	9070	3120	1672	4630	5515	3436	2453	5889	AWD
148	3.5L EcoBoost	9070	3040	1593	4630	5515	3502	2467	5968	AWD

GVWR/PAYLOAD/ARC/GAWR/BASE CURB WEIGHT - Van Long WB Extended Length, High Roof (109.4")

CARGO VAN

Wheelbase	Engine	Max. GVWR (lbs)	Max. Payload (lbs)	ARC Weight (lbs)	Max. Std. Spring Select		Base Curb Weight (lbs)			RWD or AWD
					Front	Rear	Front	Rear	Total	
148	2.0L Diesel	9250	3380	1756	4130	6000	3146	2659	5805	RWD
148	2.0L Diesel	9500	3630	1756	4130	6000	3146	2659	5805	RWD
148	2.0L Diesel	9950	3870	1543	4130	6835	3153	2865	6018	RWD
148	2.0L Diesel	10360	4280	1926	4130	7275	3153	2862	6015	RWD
148	2.0L Diesel	9070	3200	1754	4130	5660	3145	2662	5807	RWD
148	3.5L PFDI	9500	3910	2028	4130	6000	2939	2594	5533	RWD
148	3.5L EcoBoost	9500	3820	1946	4130	6000	3000	2614	5615	RWD
148	3.5L PFDI	9500	3670	1792	4630	6000	3147	2622	5769	AWD
148	3.5L EcoBoost	9500	3590	1714	4630	6000	3207	2641	5847	AWD
148	3.5L PFDI	9900	4090	1818	4130	6835	2946	2797	5743	RWD
148	3.5L PFDI	9900	3850	1576	4630	6835	3154	2831	5985	AWD
148	3.5L PFDI	9950	4140	1818	4130	6835	2946	2797	5743	RWD
148	3.5L EcoBoost	9950	4060	1735	4130	6835	3008	2817	5826	RWD
148	3.5L PFDI	9950	3900	1576	4630	6835	3154	2831	5985	AWD
148	3.5L EcoBoost	9950	3820	1496	4630	6835	3215	2850	6065	AWD
148	3.5L PFDI	10360	4550	2198	4130	7275	2946	2797	5743	RWD
148	3.5L EcoBoost	10360	4470	2115	4130	7275	3008	2817	5826	RWD
148	3.5L EcoBoost	10360	4230	1876	4630	7275	3215	2850	6065	AWD
148	3.5L PFDI	9070	3480	2028	4130	5660	2939	2594	5533	RWD
148	3.5L EcoBoost	9070	3390	1946	4130	5660	3000	2614	5615	RWD
148	3.5L PFDI	9070	3240	1792	4630	5660	3147	2622	5769	AWD
148	3.5L EcoBoost	9070	3160	1714	4630	5660	3207	2641	5847	AWD

CREW VAN

Wheelbase	Engine	Max. GVWR (lbs)	Max. Payload (lbs)	ARC Weight (lbs)	Max. Std. Spring Select		Base Curb Weight (lbs)			RWD or AWD
					Front	Rear	Front	Rear	Total	
148	3.5L PFDI	9900	3770	1495	4130	6835	3097	2969	6066	RWD
148	3.5L PFDI	9900	3520	1253	4630	6835	3305	3003	6308	AWD
148	3.5L PFDI	9950	3820	1495	4130	6835	3097	2969	6066	RWD
148	3.5L EcoBoost	9950	3710	1386	4630	6835	3170	3005	6175	RWD
148	3.5L PFDI	9950	3570	1253	4630	6835	3305	3003	6308	AWD
148	3.5L EcoBoost	9950	3490	1173	4630	6835	3366	3022	6388	AWD
148	3.5L PFDI	10360	4230	1875	4130	7275	3097	2969	6066	RWD
148	3.5L EcoBoost	10360	4120	1766	4630	7275	3170	3005	6175	RWD
148	3.5L EcoBoost	10360	3900	1553	4630	7275	3366	3022	6388	AWD

TRANSIT
MODEL LINEUP
CHASSIS CAB

GVWR/PAYLOAD/ARC/GAWR/BASE CURB WEIGHT - Chassis Cab 138”/156”/178” WB, Low Roof (87.2")

Wheelbase	Engine	Max. GVWR (lbs)	Max. Payload (lbs)	ARC Weight (lbs)	Max. Std. Spring Select GAWR		Base Curb Weight (lbs)			RWD or AWD
					Front	Rear	Front	Rear	Total	
138	2.0L Diesel	9500	4940	4071	4130	5750	3184	1325	4509	RWD
138	2.0L Diesel	9950	5260	3464	4630	6835	3164	1476	4640	RWD
138	2.0L Diesel	10360	5670	4480	4630	7275	3164	1476	4640	RWD
138	2.0L Diesel	9070	4510	3871	4130	5515	3184	1325	4509	RWD
138	3.5L PFDI	9500	5210	3287	4130	5750	2982	1261	4243	RWD
138	3.5L EcoBoost	9500	5120	4246	4130	5750	3052	1282	4334	RWD
138	3.5L PFDI	9500	4980	3057	4630	5750	3188	1285	4473	AWD
138	3.5L EcoBoost	9500	4890	4016	4630	5750	3259	1305	4564	AWD
138	3.5L EcoBoost	9900	5340	3591	4130	6835	3061	1452	4513	RWD
138	3.5L EcoBoost	9900	5100	3355	4630	6835	3268	1482	4749	AWD
138	3.5L PFDI	9950	5480	3108	4130	6835	2991	1431	4422	RWD
138	3.5L EcoBoost	9950	5390	3591	4130	6835	3061	1452	4513	RWD
138	3.5L PFDI	9950	5240	2871	4630	6835	3197	1462	4659	AWD
138	3.5L EcoBoost	9950	5150	3355	4630	6835	3268	1482	4749	AWD
138	3.5L EcoBoost	10360	5840	4645	4130	7275	3035	1440	4475	RWD
138	3.5L EcoBoost	10360	5600	4408	4630	7275	3242	1470	4712	AWD
138	3.5L PFDI	9070	4780	3287	4130	5515	2982	1261	4243	RWD
138	3.5L EcoBoost	9070	4690	3196	4130	5515	3052	1282	4334	RWD
138	3.5L PFDI	9070	4550	3057	4630	5515	3188	1285	4473	AWD
138	3.5L EcoBoost	9070	4460	2966	4630	5515	3259	1305	4564	AWD
138	3.5L EcoBoost	11000	6390	4920	4630	7275	3064	1496	4560	RWD
138	3.5L EcoBoost	11000	6170	4707	4630	7275	3260	1513	4773	AWD
156	2.0L Diesel	9500	4850	3985	4130	6000	3268	1327	4595	RWD
156	2.0L Diesel	9950	5160	3364	4630	6835	3260	1480	4740	RWD
156	2.0L Diesel	10360	5570	4381	4630	7275	3260	1479	4739	RWD
156	2.0L Diesel	9070	4420	3785	4130	5515	3268	1327	4595	RWD
156	3.5L PFDI	9500	5170	3246	4130	5750	3024	1260	4284	RWD
156	3.5L EcoBoost	9500	5080	4205	4130	5750	3095	1280	4375	RWD
156	3.5L PFDI	9500	4940	3021	4630	5750	3227	1282	4509	AWD
156	3.5L EcoBoost	9500	4850	3980	4630	5750	3298	1302	4600	AWD
156	3.5L EcoBoost	9900	5310	3564	4130	6835	3095	1445	4540	RWD
156	3.5L EcoBoost	9900	5080	3333	4630	6835	3298	1474	4771	AWD
156	3.5L PFDI	9950	5450	3081	4130	6835	3024	1425	4449	RWD
156	3.5L EcoBoost	9950	5360	3564	4130	6835	3095	1445	4540	RWD
156	3.5L PFDI	9950	5220	2849	4630	6835	3227	1453	4681	AWD
156	3.5L EcoBoost	9950	5130	3333	4630	6835	3298	1474	4771	AWD
156	3.5L EcoBoost	10360	5740	4549	4130	7275	3128	1442	4571	RWD
156	3.5L EcoBoost	10360	5500	4318	4630	7275	3332	1471	4802	AWD
156	3.5L PFDI	9070	4740	3247	4130	5515	3023	1260	4283	RWD
156	3.5L EcoBoost	9070	4650	3156	4130	5515	3094	1280	4374	RWD
156	3.5L PFDI	9070	4510	3022	4630	5515	3226	1282	4508	AWD
156	3.5L EcoBoost	9070	4420	2931	4630	5515	3297	1302	4599	AWD
156	3.5L EcoBoost	11000	6290	4825	4630	7275	3157	1498	4655	RWD
156	3.5L EcoBoost	11000	6080	4616	4630	7275	3350	1514	4864	AWD

Wheelbase	Engine	Max. GVWR (lbs)	Max. Payload (lbs)	ARC Weight (lbs)	Max. Std. Spring Select GAWR		Base Curb Weight (lbs)			RWD or AWD
					Front	Rear	Front	Rear	Total	
178	3.5L EcoBoost	9900	5200	3455	4130	6835	3180	1469	4649	RWD
178	3.5L EcoBoost	9900	4960	3219	4630	6835	3386	1499	4885	AWD
178	2.0L Diesel	9950	5080	3287	4630	6835	3325	1492	4817	RWD
178	2.0L Diesel	10360	5490	4303	4630	7275	3325	1492	4817	RWD
178	3.5L PFDI	9950	5340	2972	4130	6835	3109	1449	4558	RWD
178	3.5L EcoBoost	9950	5250	3455	4130	6835	3180	1469	4649	RWD
178	3.5L PFDI	9950	5100	2736	4630	6835	3315	1479	4794	AWD
178	3.5L EcoBoost	9950	5010	3219	4630	6835	3386	1499	4885	AWD
178	3.5L EcoBoost	10360	5670	4478	4130	7275	3189	1453	4642	RWD
178	3.5L EcoBoost	10360	5430	4242	4630	7275	3395	1483	4878	AWD
178	3.5L EcoBoost	11000	6220	4753	4630	7275	3217	1509	4727	RWD
178	3.5L EcoBoost	11000	6010	4541	4630	7275	3413	1526	4939	AWD

TRANSIT
MODEL LINEUP
CUTAWAY

GVWR/PAYLOAD/ARC/GAWR/BASE CURB WEIGHT - Cutaway 138”/156”/178” WB, Low Roof (87.3")

Wheelbase	Engine	Max. GVWR (lbs)	Max. Payload (lbs)	ARC Weight (lbs)	Max. Std. Spring Select		Base Curb Weight (lbs)			RWD or AWD
					Front	Rear	Front	Rear	Total	
138	2.0L Diesel	9500	4970	4096	4130	5750	3166	1318	4484	RWD
138	2.0L Diesel	9950	5270	3479	4630	6835	3156	1469	4625	RWD
138	2.0L Diesel	10360	5680	4495	4630	7275	3156	1469	4625	RWD
138	2.0L Diesel	9070	4540	3896	4130	5515	3167	1317	4484	RWD
138	3.5L PFDI	9500	5230	3307	4130	5750	2971	1252	4223	RWD
138	3.5L EcoBoost	9500	5140	4266	4130	5750	3041	1273	4314	RWD
138	3.5L PFDI	9500	5000	3077	4630	5750	3177	1276	4453	AWD
138	3.5L EcoBoost	9500	4910	4036	4630	5750	3248	1296	4544	AWD
138	3.5L EcoBoost	9900	5370	3624	4130	6835	3041	1439	4480	RWD
138	3.5L EcoBoost	9900	5130	3388	4630	6835	3248	1469	4716	AWD
138	3.5L PFDI	9950	5510	3141	4130	6835	2971	1418	4389	RWD
138	3.5L EcoBoost	9950	5420	3624	4130	6835	3041	1439	4480	RWD
138	3.5L PFDI	9950	5270	2904	4630	6835	3177	1449	4626	AWD
138	3.5L EcoBoost	9950	5180	3388	4630	6835	3248	1469	4716	AWD
138	3.5L EcoBoost	10360	5850	4659	4130	7275	3027	1433	4461	RWD
138	3.5L EcoBoost	10360	5610	4423	4630	7275	3234	1463	4697	AWD
138	3.5L PFDI	9070	4800	3307	4130	5515	2971	1252	4223	RWD
138	3.5L EcoBoost	9070	4710	3216	4130	5515	3041	1273	4314	RWD
138	3.5L PFDI	9070	4570	3077	4630	5515	3177	1276	4453	AWD
138	3.5L EcoBoost	9070	4480	2986	4630	5515	3248	1296	4544	AWD
138	3.5L EcoBoost	11000	6400	4935	4630	7275	3056	1490	4545	RWD
138	3.5L EcoBoost	11000	6190	4721	4630	7275	3252	1507	4759	AWD
156	2.0L Diesel	9500	4850	3985	4130	6000	3268	1327	4595	RWD
156	2.0L Diesel	9950	5160	3367	4630	6835	3259	1478	4737	RWD
156	2.0L Diesel	10360	5570	4382	4630	7275	3260	1478	4738	RWD
156	2.0L Diesel	9070	4420	3785	4130	5515	3268	1327	4595	RWD
156	3.5L PFDI	9500	5170	3248	4130	5750	3023	1259	4282	RWD
156	3.5L EcoBoost	9500	5080	4207	4130	5750	3093	1280	4373	RWD
156	3.5L PFDI	9500	4940	3022	4630	5750	3226	1282	4508	AWD
156	3.5L EcoBoost	9500	4850	3982	4630	5750	3296	1302	4598	AWD
156	3.5L EcoBoost	9900	5310	3562	4130	6835	3097	1445	4542	RWD
156	3.5L EcoBoost	9900	5070	3331	4630	6835	3300	1474	4773	AWD
156	3.5L PFDI	9950	5450	3079	4130	6835	3026	1425	4451	RWD
156	3.5L EcoBoost	9950	5360	3562	4130	6835	3097	1445	4542	RWD
156	3.5L PFDI	9950	5220	2847	4630	6835	3229	1453	4683	AWD
156	3.5L EcoBoost	9950	5120	3331	4630	6835	3300	1474	4773	AWD
156	3.5L EcoBoost	10360	5740	4550	4130	7275	3128	1441	4570	RWD
156	3.5L EcoBoost	10360	5510	4319	4630	7275	3332	1470	4801	AWD
156	3.5L PFDI	9070	4740	3247	4130	5515	3023	1260	4283	RWD
156	3.5L EcoBoost	9070	4650	3156	4130	5515	3094	1280	4374	RWD
156	3.5L PFDI	9070	4510	3022	4630	5515	3226	1282	4508	AWD
156	3.5L EcoBoost	9070	4420	2931	4630	5515	3297	1302	4599	AWD
178	3.5L EcoBoost	9900	5240	3493	4130	6835	3156	1456	4611	RWD
178	3.5L EcoBoost	9900	5000	3257	4630	6835	3362	1486	4847	AWD
156	3.5L EcoBoost	11000	6290	4826	4630	7275	3157	1497	4654	RWD
156	3.5L EcoBoost	11000	6080	4617	4630	7275	3350	1513	4863	AWD

Wheelbase	Engine	Max. GVWR (lbs)	Max. Payload (lbs)	ARC Weight (lbs)	Max. Std. Spring Select		Base Curb Weight (lbs)			RWD or AWD
					Front	Rear	Front	Rear	Total	
178	2.0L Diesel	9950	5140	3351	4630	6835	3283	1470	4753	RWD
178	2.0L Diesel	10360	5550	4367	4630	7275	3283	1470	4753	RWD
178	3.5L PFDI	9950	5380	3009	4130	6835	3085	1435	4521	RWD
178	3.5L EcoBoost	9950	5290	3493	4130	6835	3156	1456	4611	RWD
178	3.5L PFDI	9950	5140	2774	4630	6835	3291	1465	4756	AWD
178	3.5L EcoBoost	9950	5050	3257	4630	6835	3362	1486	4847	AWD
178	3.5L EcoBoost	10360	5730	4542	4130	7275	3147	1431	4578	RWD
178	3.5L EcoBoost	10360	5490	4306	4630	7275	3353	1461	4814	AWD
178	3.5L EcoBoost	11000	6290	4817	4630	7275	3175	1487	4663	RWD
178	3.5L EcoBoost	11000	6070	4605	4630	7275	3371	1504	4875	AWD

TRANSIT
DIMENSIONAL DATA
REGULAR WB 8-PASSENGER WAGON

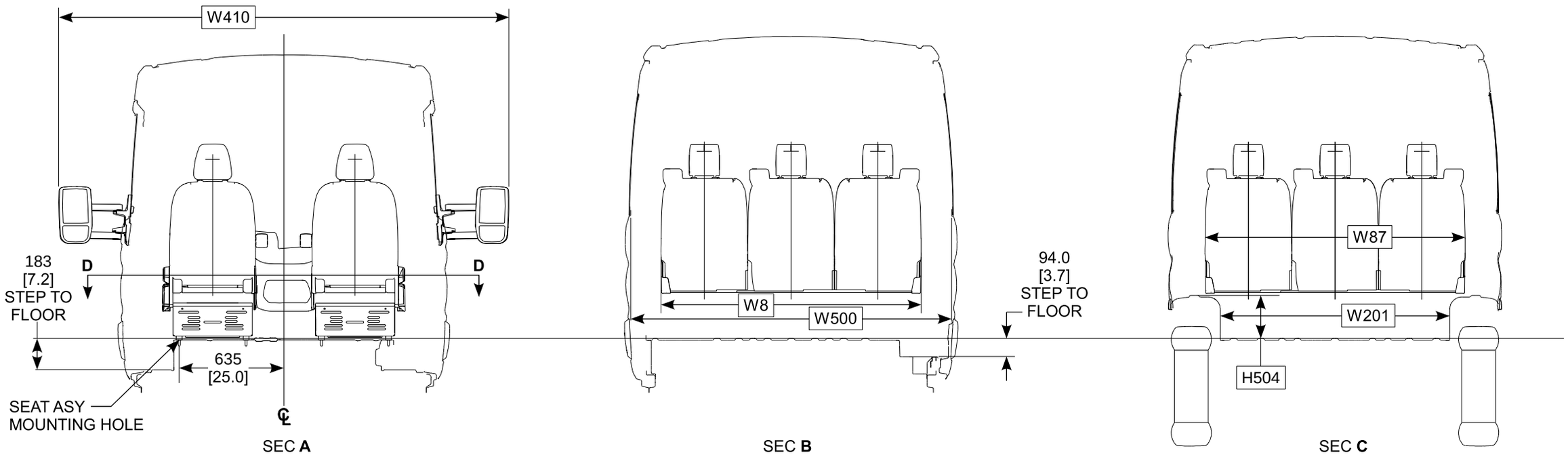

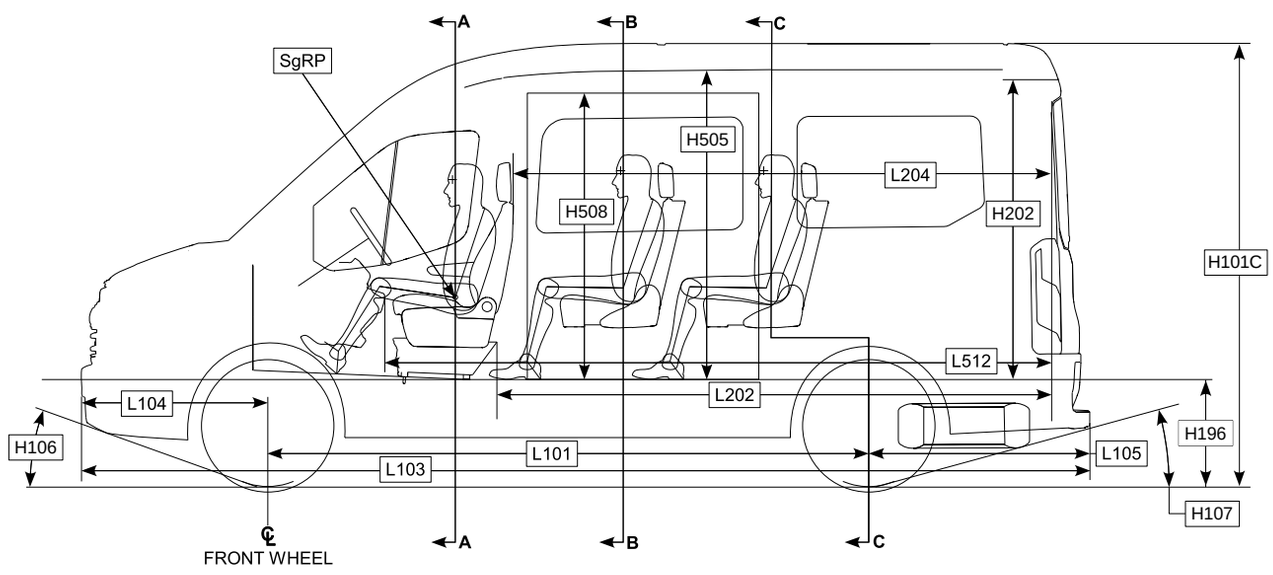

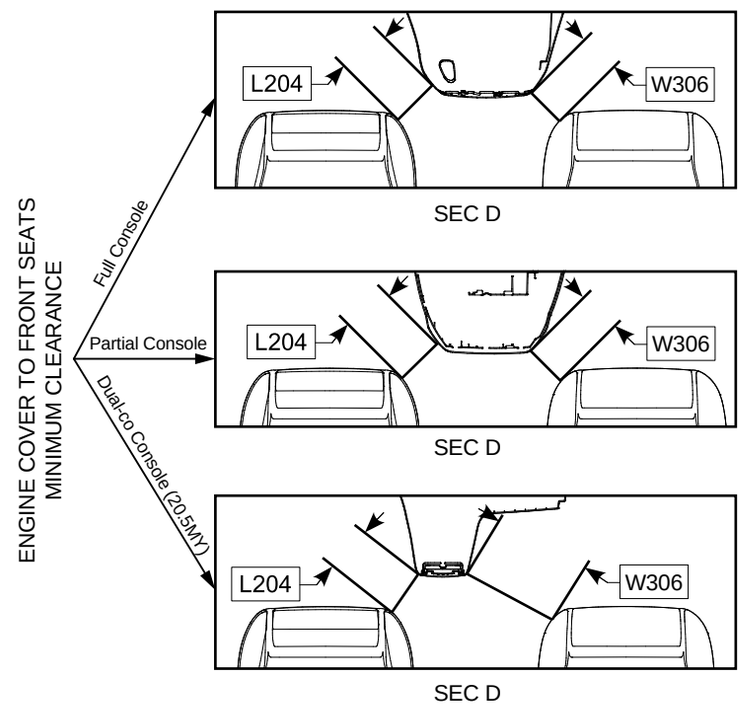

NOTE — [ ] DIMENSIONS ARE INCHES.

(Cont'd next page)

TRANSIT
DIMENSIONAL DATA
REGULAR WB 10-PASSENGER WAGON

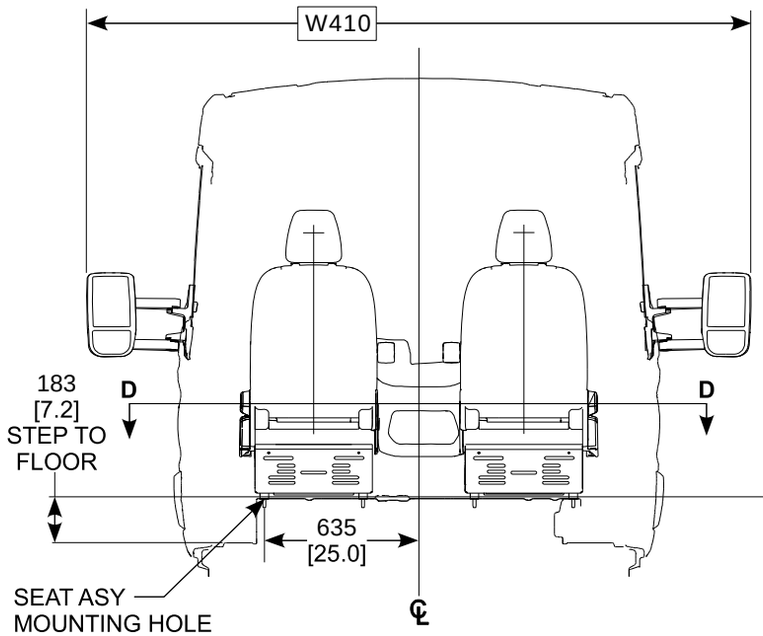

SEC **A**

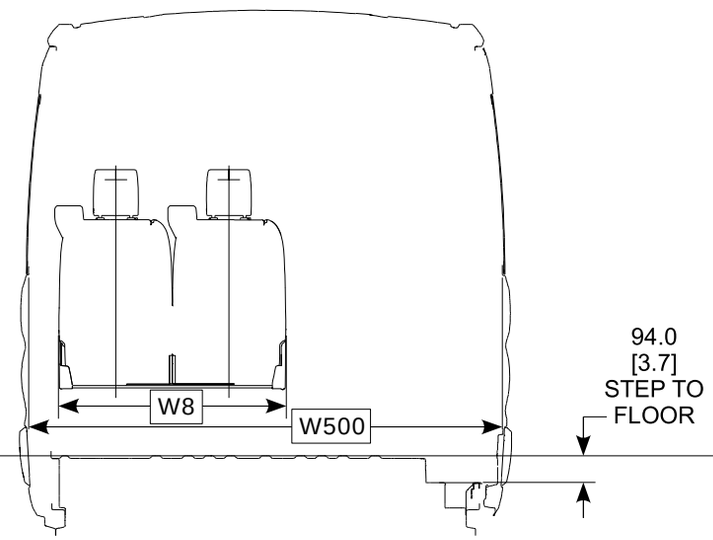

SEC **B**

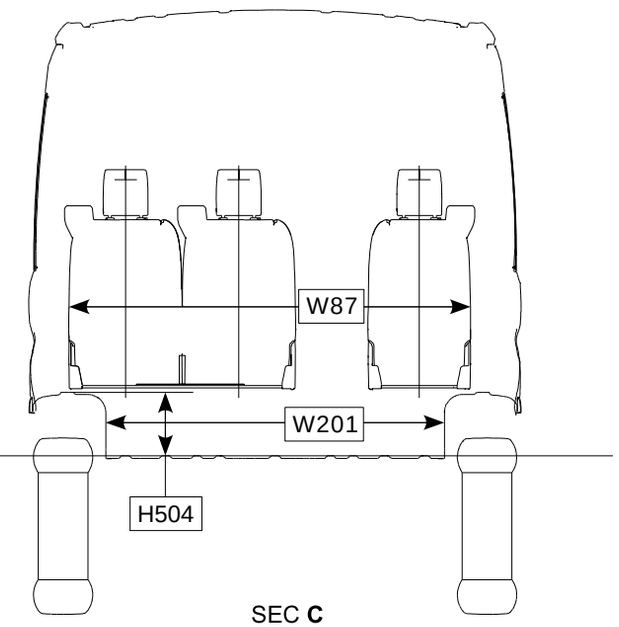

SEC **C**

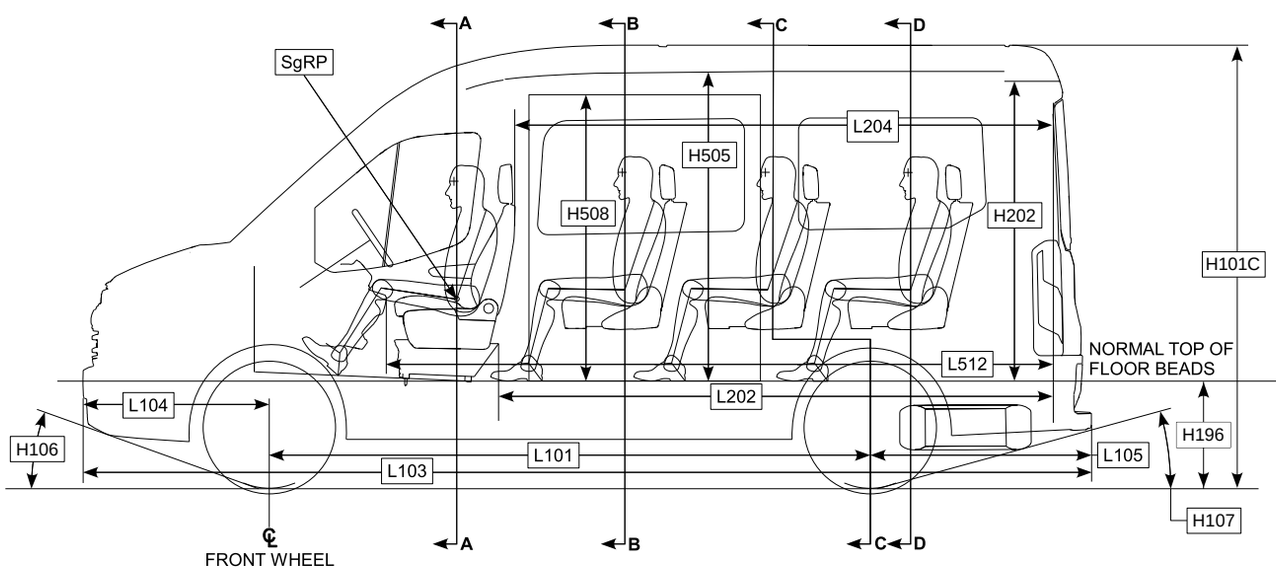

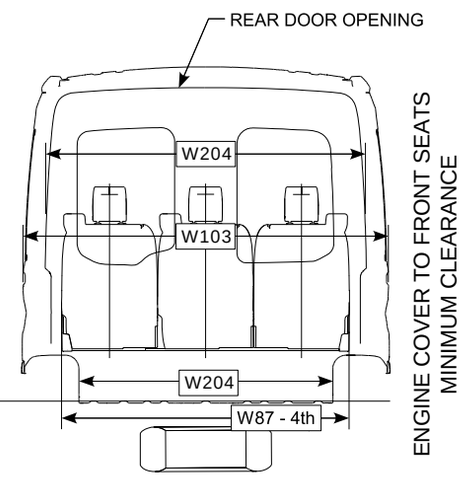

SEC **D**

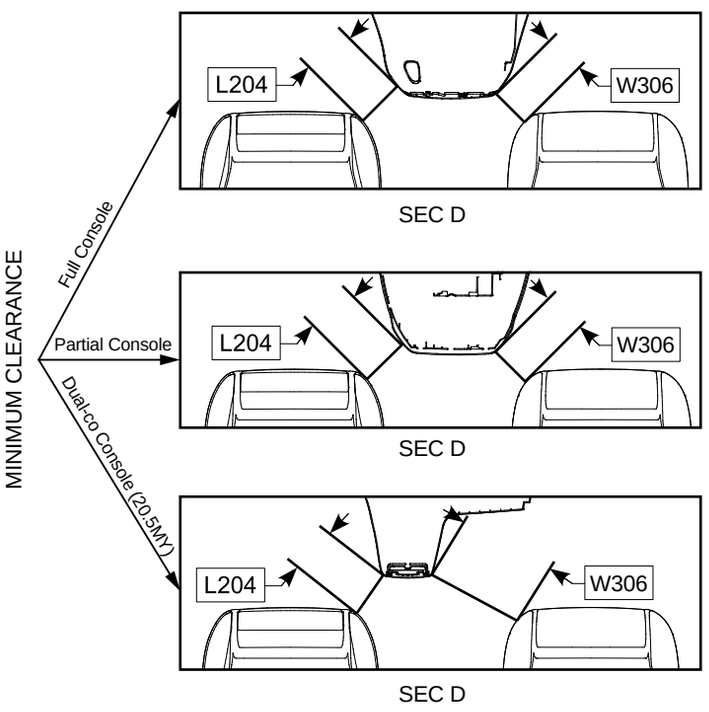

NOTE — [ ] DIMENSIONS ARE INCHES.

(Cont'd next page)

TRANSIT
DIMENSIONAL DATA
REGULAR WB 12-PASSENGER WAGON

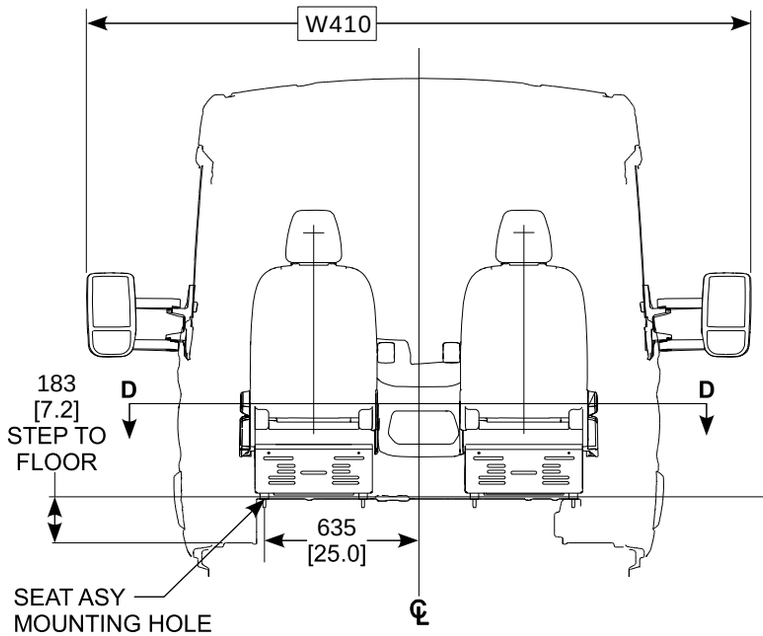

SEC **A**

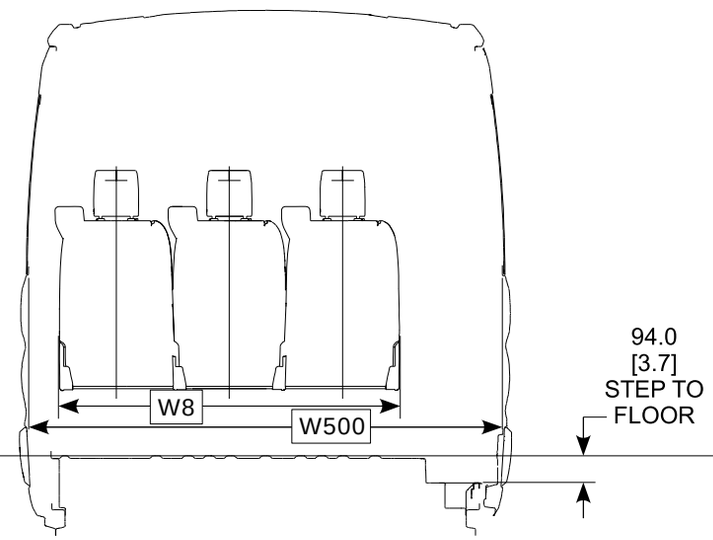

SEC **B**

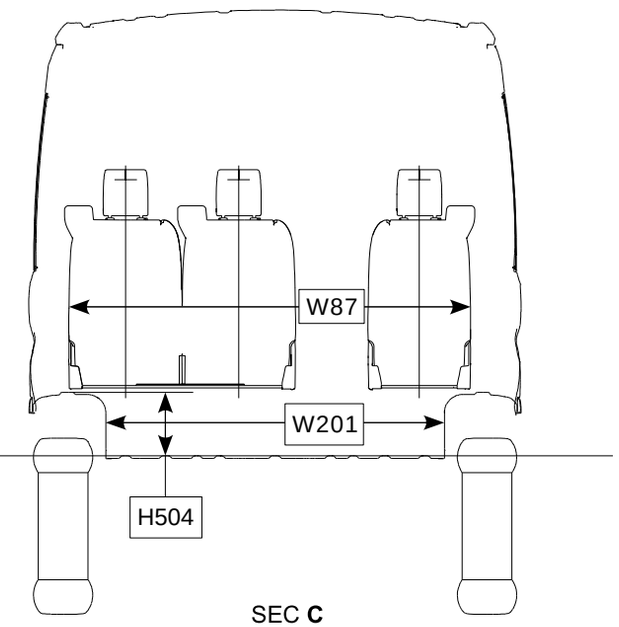

SEC **C**

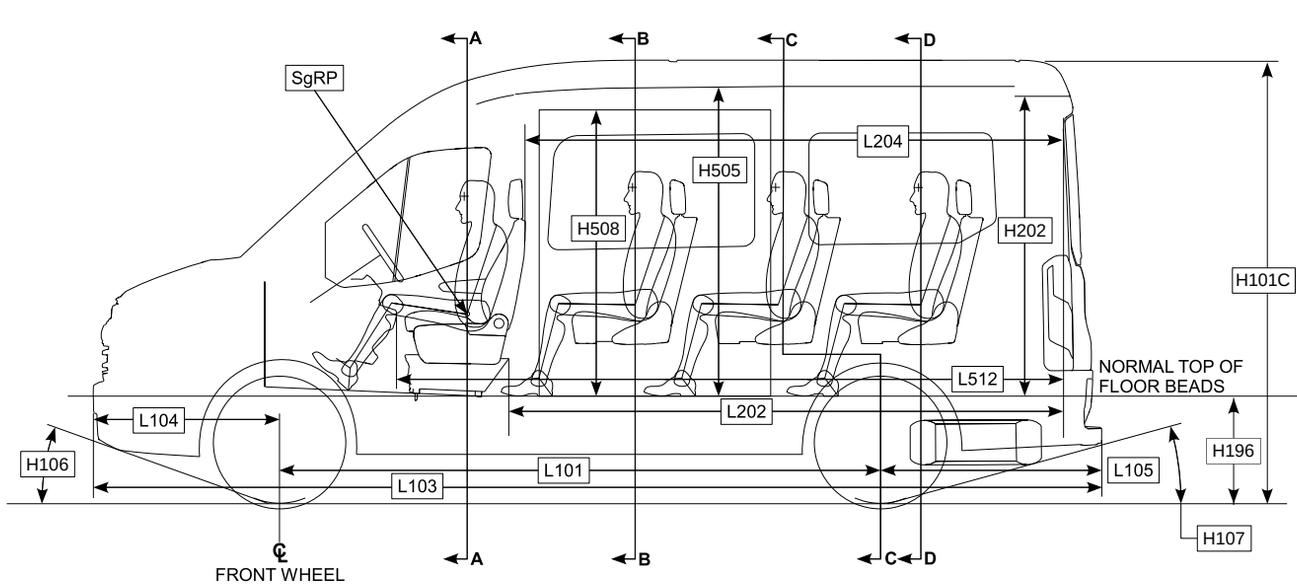

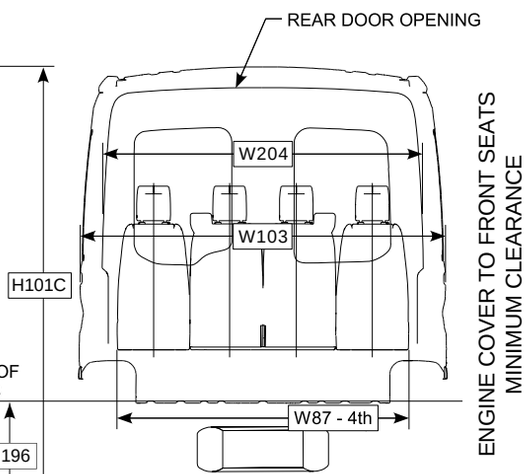

SEC **D**

ENGINE COVER TO FRONT SEATS
MINIMUM CLEARANCE

Full Console

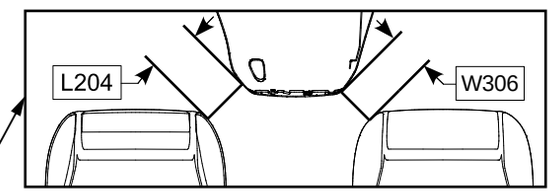

SEC D

Partial Console

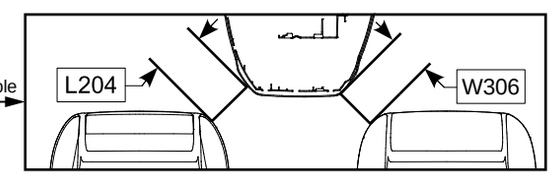

SEC D

Dual-co Console (20.5MY)

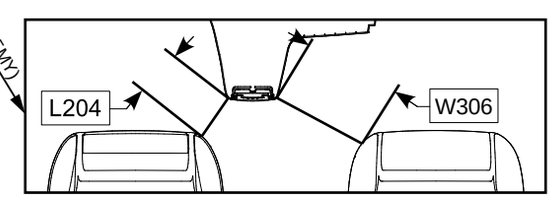

SEC D

NOTE — [ ] DIMENSIONS ARE INCHES.

(Cont'd next page)

TRANSIT
DIMENSIONAL DATA
LONG WB 12-PASSENGER WAGON

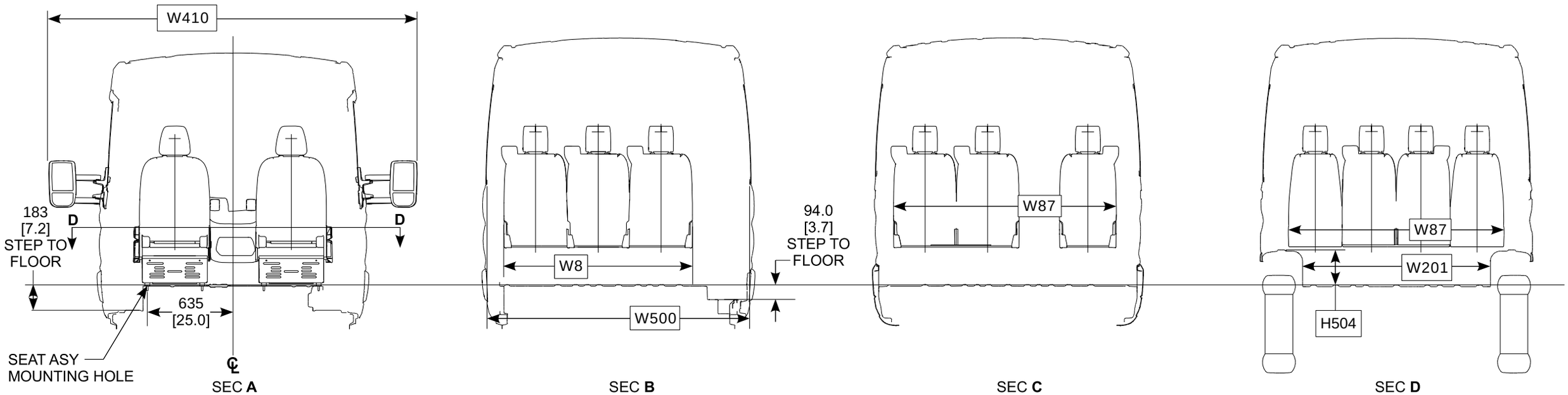

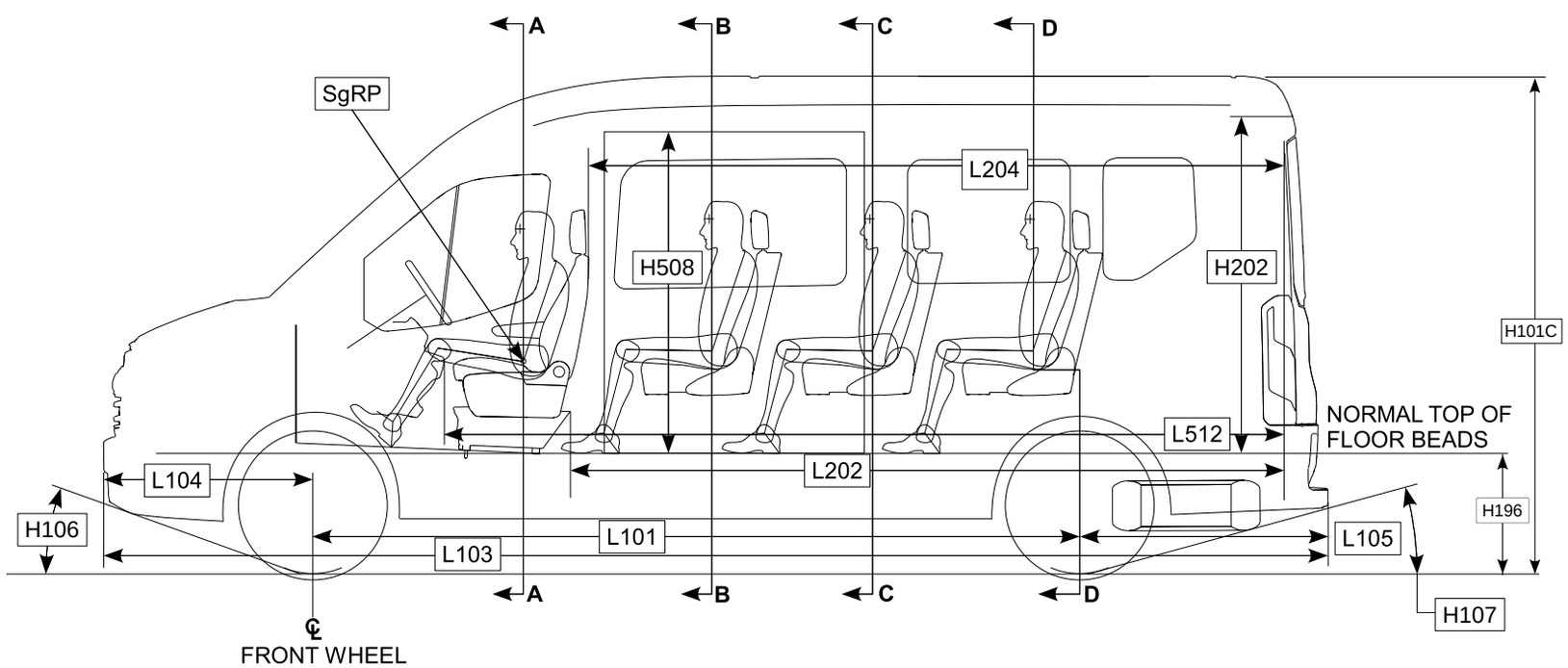

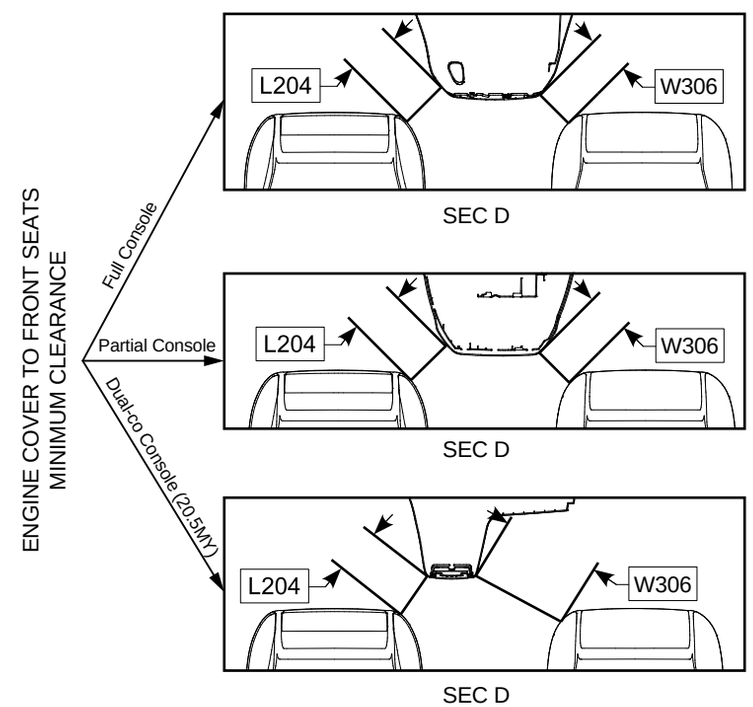

NOTE — [ ] DIMENSIONS ARE INCHES.

(Cont'd next page)

TRANSIT
DIMENSIONAL DATA
LONG WB 15-PASSENGER WAGON

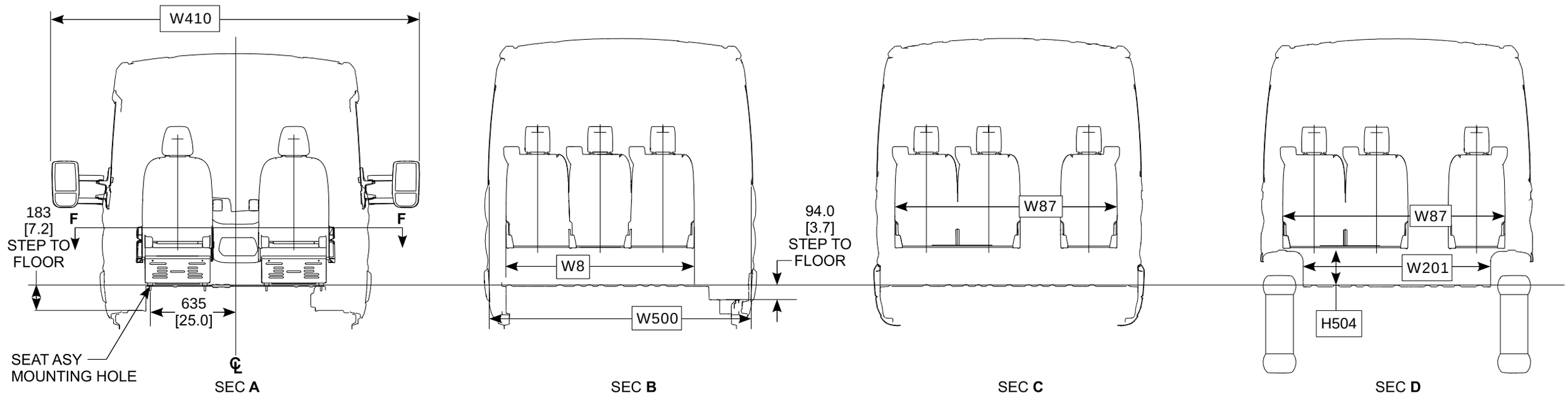

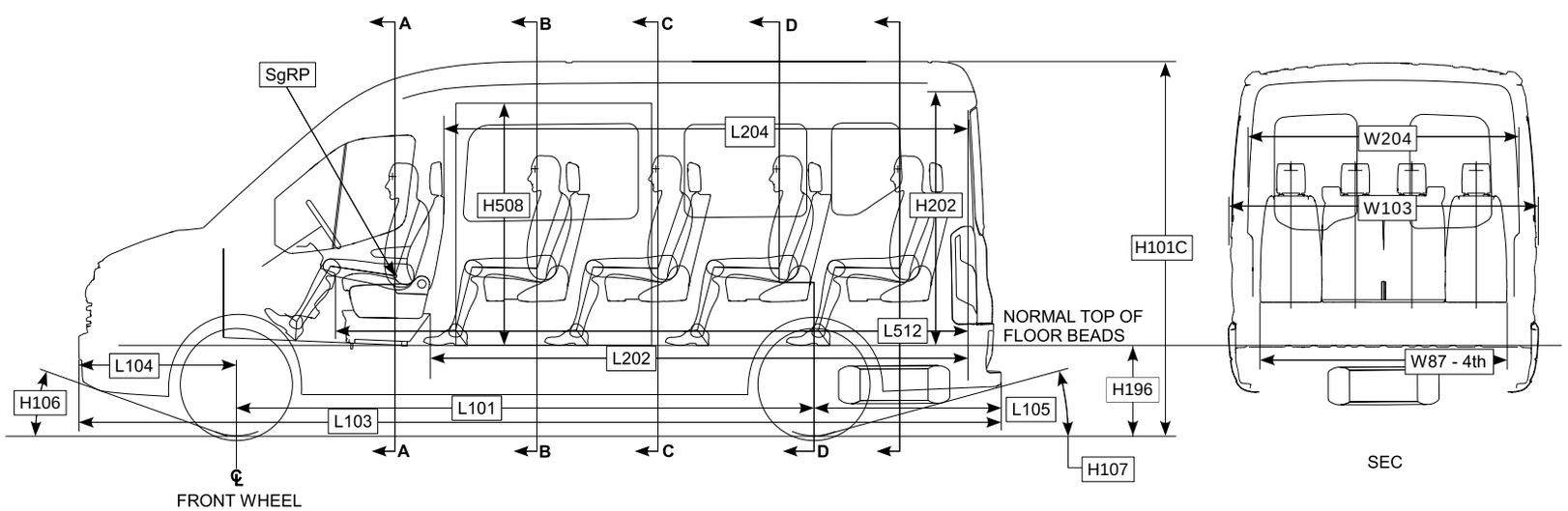

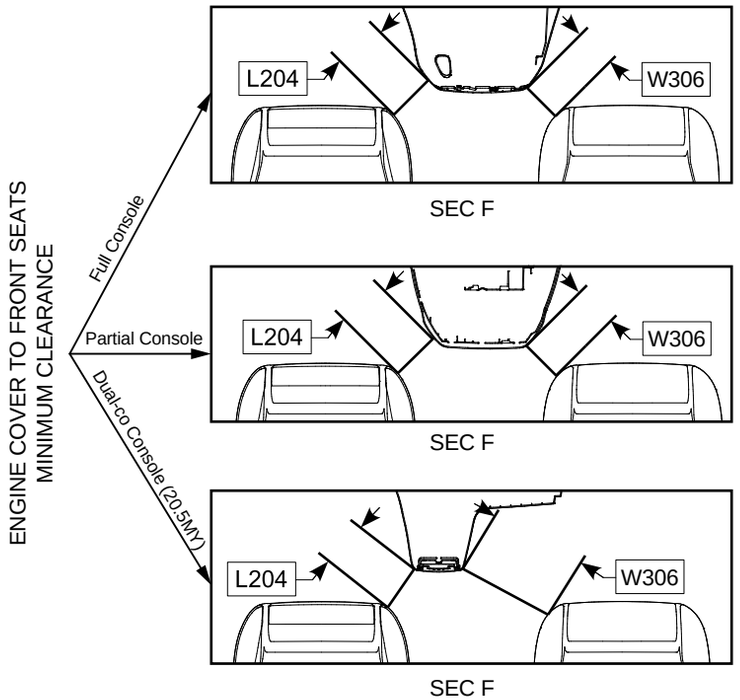

NOTE — [ ] DIMENSIONS ARE INCHES.

(Cont'd next page)

TRANSIT
DIMENSIONAL DATA
EXTENDED LENGTH LONG WB 15-PASSENGER WAGON

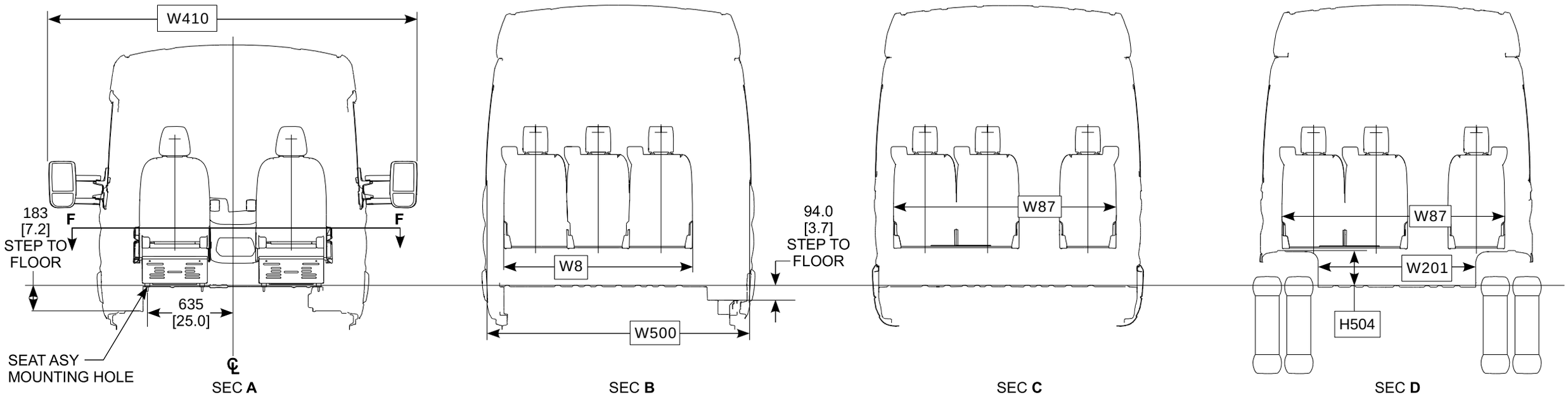

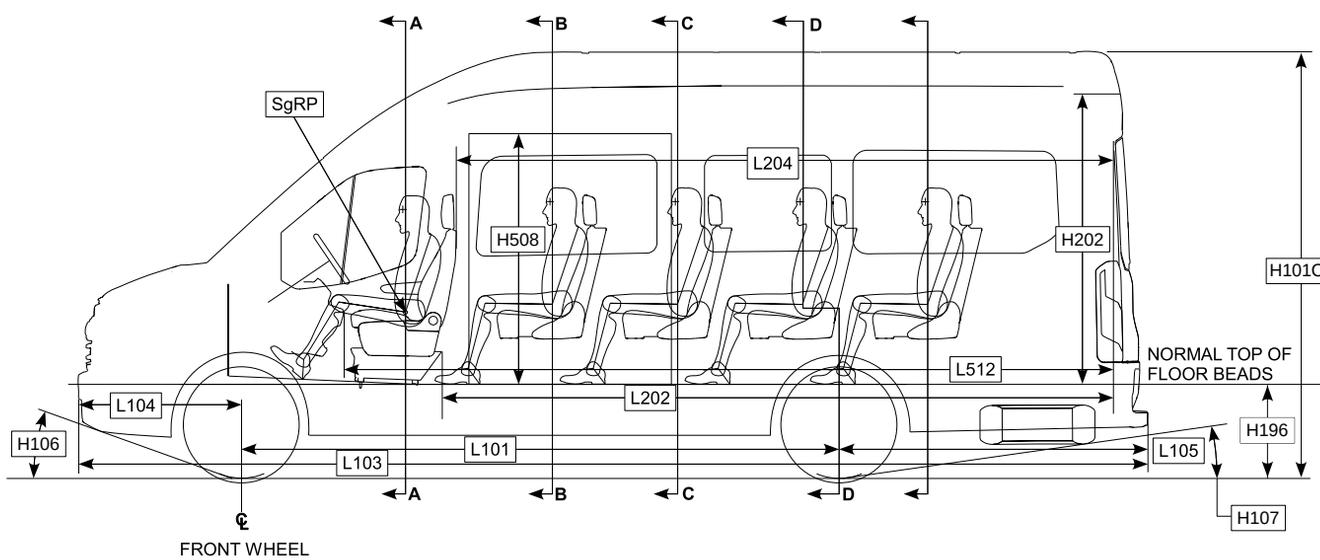

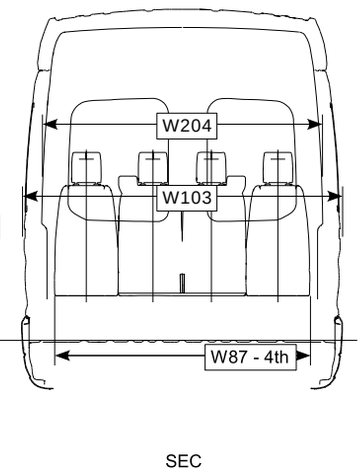

ENGINE COVER TO FRONT SEATS
MINIMUM CLEARANCE

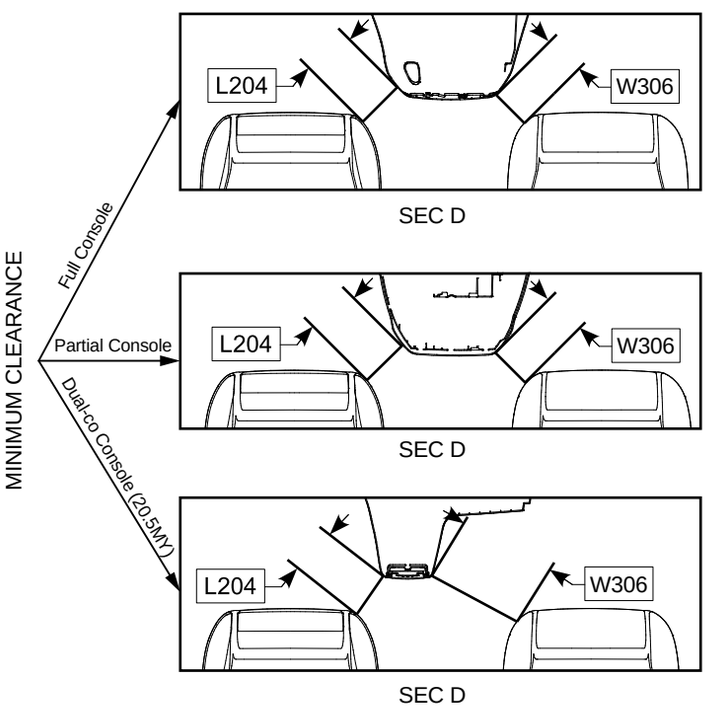

NOTE — [ ] DIMENSIONS ARE INCHES.

(Cont'd next page)

TRANSIT
DIMENSIONAL DATA
2-PASSENGER VAN

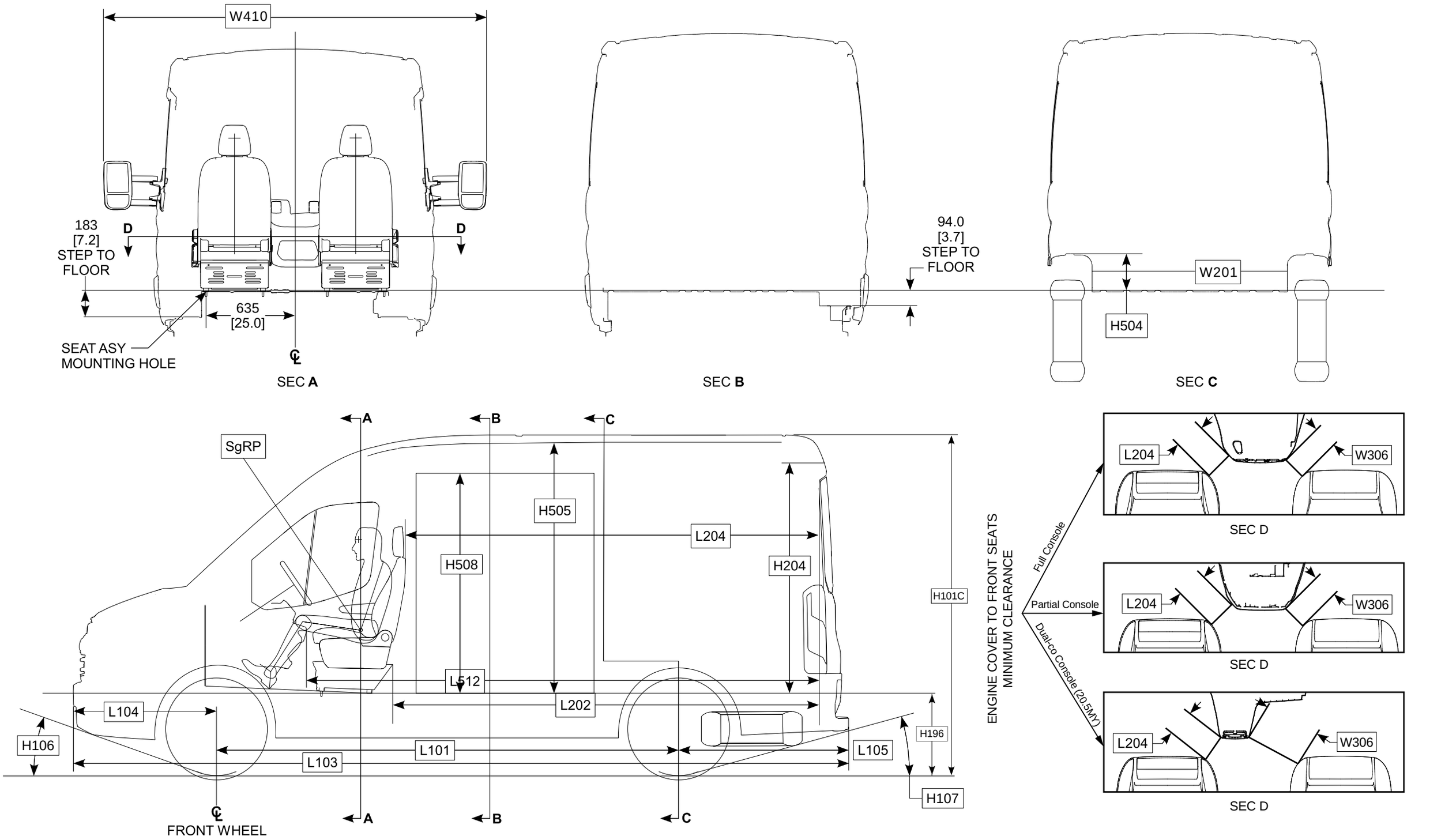

NOTE — [ ] DIMENSIONS ARE INCHES.

(Cont'd next page)

TRANSIT
DIMENSIONAL DATA
WAGON / VAN

ENGLISH UNITS

Dim Code	2020 FORD TRANSIT																							
	Wheelbase (Medium, Long, Jumbo)	Medium	Medium	Medium	Medium	Medium	Medium	Long	Long	Long	Long	Long	Long	Long	Long	Long	Jumbo	Jumbo	Medium	Medium	Long	Long	Long	Jumbo
	Bus / Van	Transit Bus	Transit Bus	Transit Bus	Transit Bus	Transit Bus	Transit Bus	Transit Bus	Transit Bus	Transit Bus	Transit Bus	Transit Bus	Transit Bus	Transit Bus	Transit Bus	Transit Bus	Transit Bus	Transit Bus	Transit Van	Transit Van	Transit Van	Transit Van	Transit Van	Transit Van
	Roof (Low, Medium, High)	Low	Medium	Low	Low	Medium	Medium	Low	Medium	High	Low	Low	Medium	Medium	High	High	High	High	Low	Medium	Low	Medium	High	High
	Passenger Capacity (2, 5, 8, 10, 12, 15)	2	2	8	10	8	10	2	2	2	12	15	12	15	12	15	2	15	2	2	2	2	2	2
	Rows of Seating	**1**	**1**	**3 (2-3-3)**	**4 (2-2-3-3)**	**3 (2-3-3)**	**4 (2-2-3-3)**	**1**	**1**	**1**	**4 (2-3-3-4)**	**5 (2-3-3-3-4)**	**4 (2-3-3-4)**	**5 (2-3-3-3-4)**	**4 (2-3-3-4)**	**5 (2-3-3-3-4)**	**1**	**5 (2-3-3-3-4)**	**1**	**1**	**1**	**1**	**1**	**1**
	Exterior																							
L101	Wheelbase [in]	129.9	129.9	129.9	129.9	129.9	129.9	147.6	147.6	147.6	147.6	147.6	147.6	147.6	147.6	147.6	147.6	147.6	129.9	129.9	147.6	147.6	147.6	147.6
L103	Length [in]	219.9	217.8	219.9	219.9	217.8	217.8	237.6	235.5	235.5	237.6	237.6	235.5	235.5	235.5	235.5	263.9	263.9	219.9	217.8	237.6	235.5	235.5	263.9
L103	Length with optional extended bumper [mm]	-	219.9	-	-	219.9	219.9	-	237.6	237.6	-	-	237.6	237.6	237.6	237.6	266.1	266.1	-	219.9	-	237.6	237.6	266.1
H101C-Ford	Height [in]	82.3	98.8	82.2	82.2	98.7	98.7	99.9	99.8	109.6	82.4	82.4	99.2	99.2	108.6	108.6	109.4	107.7	83.9	100.8	83.2	100.7	110.1	109.4
W103	Width - Excluding Mirrors [in]	81.3	81.3	81.3	81.3	81.3	81.3	81.3	81.3	81.3	81.3	81.3	81.3	81.3	81.3	81.3	81.3	81.3	81.3	81.3	81.3	81.3	81.3	-
W410	Width - Including Mirrors [in]	97.4	97.4	97.4	97.4	97.4	97.4	97.4	97.4	97.4	97.4	97.4	97.4	97.4	97.4	97.4	97.4	97.4	97.4	97.4	97.4	97.4	97.4	97.4
W411	Width - Mirrors Folded [in]	83.2	83.2	83.2	83.2	83.2	83.2	83.2	83.2	83.2	83.2	83.2	83.2	83.2	83.2	83.2	83.2	83.2	83.2	83.2	83.2	83.2	83.2	83.2
W101C-Ford	Front Track [in]	68.2	68.2	68.2	68.2	68.2	68.2	68.2	68.2	68.2	68.2	68.2	68.2	68.2	68.2	68.2	68.2	68.2	68.2	68.2	68.2	68.2	68.2	-
W102C-Ford	Rear Track [in]	68.6	68.6	68.6	68.6	68.6	68.6	68.6	68.6	68.6	68.6	68.6	68.6	68.6	68.6	68.6	68.6	68.6	68.6	68.6	68.6	68.6	68.6	-
L104	Front Overhang [in]	40.3	40.3	40.3	40.3	40.3	40.3	40.3	40.3	40.3	40.3	40.3	40.3	40.3	40.3	40.3	40.3	40.3	40.3	40.3	40.3	40.3	40.3	40.3
L105	Rear Overhang [in]	49.7	47.6	49.7	49.7	47.6	47.6	49.7	47.6	47.6	49.7	49.7	47.6	47.6	47.6	47.6	76.0	76.0	49.7	47.6	49.7	47.6	47.6	76.0
L105	Rear Overhang with optional extended bumper [mm]	-	49.7	-	-	49.7	49.7	-	49.7	49.7	-	-	49.7	49.7	49.7	49.7	78.1	78.1	-	49.7	-	49.7	49.7	78.1
H196	Load Height (Curb) [in]	28.2	28.2	28.2	28.2	28.2	28.2	28.8	28.8	28.8	28.8	28.8	28.8	28.8	28.8	28.8	27.8	27.8	28.9	28.9	28.7	28.7	28.7	28.0
H508	Side Cargo Door Opening Height [in]	-	-	-	-	-	-	-	-	-	-	-	-	-	-	-	-	-	49.6	63.0	49.6	63.0	63.0	63.0
L508	Side Cargo Door Opening Width - Hinged [in]	-	-	-	-	-	-	-	-	-	-	-	-	-	-	-	-	-	51.2	51.2	51.2	51.2	51.2	51.2
L508	Side Cargo Door Opening Width - Sliding [in]	-	-	-	-	-	-	-	-	-	-	-	-	-	-	-	-	-	51.2	51.2	51.2	51.2	51.2	51.2
H202	Rear Cargo Door Opening Height [in]	46.9	62.8	46.9	46.9	62.8	62.8	46.9	62.8	72.2	46.9	46.9	62.8	62.8	72.2	72.2	72.2	72.2	49.5	64.9	49.5	64.9	74.3	74.3
W203	Rear Cargo Door Opening Width [in]	59.8	59.8	59.8	59.8	59.8	59.8	59.8	59.8	59.8	59.8	59.8	59.8	59.8	59.8	59.8	59.8	59.8	61.7	61.7	61.7	61.7	61.7	61.7
	Interior																							
H61	Head Room - First Row [in]	40.8	52.0	40.8	40.8	52.0	52.0	40.8	52.0	56.6	40.8	40.8	52.0	52.0	56.6	56.6	56.6	56.6	40.8	52.0	40.8	52.0	56.6	56.6
H63	Head Room - Second Row [in]	-	-	41.1	41.1	55.8	55.8	-	-	-	41.1	41.1	55.8	55.8	65.2	65.2	-	65.2	-	-	-	-	-	-
H86	Head Room - Third Row [in]	-	-	40.6	40.6	55.8	55.8	-	-	-	40.6	40.6	55.8	55.8	65.2	65.2	-	65.2	-	-	-	-	-	-
H86-4th	Head Room - Fourth Row [in]	-	-	-	38.7	-	55.8	-	-	-	38.7	38.7	55.8	55.8	65.2	65.2	-	65.2	-	-	-	-	-	-
H86-5th	Head Room - Fifth Row [in]	-	-	-	-	-	-	-	-	-	-	38.1	-	52.6	-	61.3	-	61.3	-	-	-	-	-	-
L33	Maximum Leg Room - First Row [in]	41.3	41.3	41.3	41.3	41.3	41.3	41.3	41.3	41.3	41.3	41.3	41.3	41.3	41.3	41.3	41.3	41.3	41.3	41.3	41.3	41.3	41.3	41.3
L34	Leg Room - First Row [in]	39.7	39.7	39.7	39.7	39.7	39.7	39.7	39.7	39.7	39.7	39.7	39.7	39.7	39.7	39.7	39.7	39.7	39.7	39.7	39.7	39.7	39.7	39.7
L51	Leg Room - Second Row [in]	-	-	33.7	33.7	33.7	33.7	-	-	-	33.7	33.7	33.7	33.7	33.7	33.7	-	33.7	-	-	-	-	-	-
L86	Leg Room - Third Row [in]	-	-	35.6	35.6	35.6	35.6	-	-	-	35.6	35.6	35.6	35.6	35.6	35.6	-	35.6	-	-	-	-	-	-
L86-4th	Leg Room - Fourth Row [in]	-	-	-	35.6	-	35.6	-	-	-	35.6	35.6	35.6	35.6	35.6	35.6	-	35.6	-	-	-	-	-	-
L86-5th	Leg Room - Fifth Row [in]	-	-	-	-	-	-	-	-	-	-	35.6	-	35.6	-	35.6	-	35.6	-	-	-	-	-	-
W5	Hip Room - First Row [in]	60.7	60.7	60.7	60.7	60.7	60.7	60.7	60.7	60.7	60.7	60.7	60.7	60.7	60.7	60.7	60.7	60.7	60.7	60.7	60.7	60.7	60.7	60.7
W6	Hip Room - Second Row [in]	-	-	69.6	69.6	69.6	69.6	-	-	-	69.6	69.6	69.6	69.6	69.6	69.6	-	69.6	-	-	-	-	-	-
W86	Hip Room - Third Row [in]	-	-	67.3	67.3	67.3	67.3	-	-	-	67.3	67.3	67.3	67.3	67.3	67.3	-	67.3	-	-	-	-	-	-
W86-4th	Hip Room - Fourth Row [in]	-	-	-	68.0	-	68.0	-	-	-	68.0	68.0	68.0	68.0	68.0	68.0	-	68.0	-	-	-	-	-	-
W86-5th	Hip Room - Fifth Row [in]	-	-	-	-	-	-	-	-	-	-	68.0	-	68.0	-	68.0	-	68.0	-	-	-	-	-	-
W3	Shoulder Room - First Row [in]	67.9	67.9	67.9	67.9	67.9	67.9	67.9	67.9	67.9	67.9	67.9	67.9	67.9	67.9	67.9	67.9	67.9	67.9	67.9	67.9	67.9	67.9	67.9
W4	Shoulder Room - Second Row [in]	-	-	71.4	71.4	71.4	71.4	-	-	-	71.4	71.4	71.4	71.4	71.4	71.4	-	71.4	-	-	-	-	-	-
W85	Shoulder Room - Third Row [in]	-	-	67.0	67.0	67.0	67.0	-	-	-	67.0	67.0	67.0	67.0	67.0	67.0	-	67.0	-	-	-	-	-	-
W85-4th	Shoulder Room - Fourth Row [in]	-	-	-	67.8	-	67.8	-	-	-	67.8	67.8	67.8	67.8	67.8	67.8	-	67.8	-	-	-	-	-	-
W85-5th	Shoulder Room - Fifth Row [in]	-	-	-	-	-	-	-	-	-	-	67.8	-	67.8	-	67.8	-	67.8	-	-	-	-	-	-
L202	Cargo Length Front (at Floor) [in]	124.0	124.0	124.0	124.0	124.0	124.0	141.7	141.7	141.7	141.7	141.7	141.7	141.7	141.7	141.7	170.2	170.2	126.0	126.0	143.7	143.7	143.7	172.2
L204	Cargo Length Front (at Belt) [in]	115.1	115.1	115.1	115.1	115.1	115.1	132.8	132.8	132.8	132.8	132.8	132.8	132.8	132.8	132.8	161.3	161.3	115.9	115.9	133.6	133.6	133.6	162.0
W201	Cargo Width Between Wheelhouse [in]	53.7	53.7	53.7	53.7	53.7	53.7	53.7	53.7	53.7	53.7	53.7	53.7	53.7	53.7	53.7	53.7	53.7	54.8	54.8	54.8	54.8	54.8	
H505	Cargo Height Maximum [in]	52.8	67.6	52.8	52.8	67.6	67.6	52.8	67.6	77.0	52.8	52.8	67.6	67.6	77.0	77.0	77.0	77.0	56.9	72.0	56.9	72.0	81.5	81.5
	Cargo Capacity																							
V6	Cargo Volume Behind First Row (SUV/Van)	224.5	292.7	224.5	224.5	292.7	292.7	256.4	336.1	382.6	256.4	223.5	336.1	303.1	382.6	349.6	461.9	425.4	275.0	351.4	309.5	398.1	450.7	543.2
V7	Cargo Volume Behind Second Row (SUV/Van)	-	-	151.8	151.8	197.9	197.9	-	-	-	183.0	150.0	239.8	206.8	273.0	240.1	-	313.1	-	-	-	-	-	-
V9	Cargo Volume Behind Third Row (SUV/Van)	-	-	94.2	94.2	125.0	125.0	-	-	-	124.5	91.5	166.9	133.9	190.0	157.0	-	230.0	-	-	-	-	-	-
V12	Cargo Volume Behind Fourth Row (SUV/Van)	-	-	-	-	-	-	-	-	-	70.1	48.9	93.9	72.8	107.0	85.8	-	184.0	-	-	-	-	-	-
V13	Cargo Volume Behind Fifth Row (SUV/Van)	-	-	-	-	-	-	-	-	-	-	-	-	-	-	-	-	100.5	-	-	-	-	-	-
V14	Cargo Volume - Max (Van)	-	-	-	-	-	-	-	-	-	-	-	-	-	-	-	-	-	317.8	405.6	352.3	452.2	511.9	604.4
V15	Cargo Volume - Front Seat (Van)	-	-	-	-	-	-	-	-	-	-	-	-	-	-	-	-	-	42.8	54.2	42.8	54.2	61.2	61.2

NOTE — [ ] DIMENSIONS ARE ENGLISH.

(Cont'd next page)

TRANSIT
DIMENSIONAL DATA
WAGON / VAN

METRIC UNITS

	2020 FORD TRANSIT																								
	Wheelbase (Medium, Long, Jumbo)	Medium	Medium	Medium	Medium	Medium	Medium	Long	Long	Long	Long	Long	Long	Long	Long	Long	Jumbo	Jumbo	Medium	Medium	Long	Long	Long	Jumbo
	Bus / Van	Transit Bus	Transit Bus	Transit Bus	Transit Bus	Transit Bus	Transit Bus	Transit Bus	Transit Bus	Transit Bus	Transit Bus	Transit Bus	Transit Bus	Transit Bus	Transit Bus	Transit Bus	Transit Bus	Transit Bus	Transit Van	Transit Van	Transit Van	Transit Van	Transit Van	Transit Van
	Roof (Low, Medium, High)	Low	Medium	Low	Low	Medium	Medium	Low	Medium	High	Low	Low	Medium	Medium	High	High	High	High	Low	Medium	Low	Medium	High	High
	Passenger Capacity (2, 5, 8, 10, 12, 15)	2	2	8	10	8	10	2	2	2	12	15	12	15	12	15	2	15	2	2	2	2	2	2
	Rows of Seating	**1**	**1**	**3 (2-3-3)**	**4 (2-2-3-3)**	**3 (2-3-3)**	**4 (2-2-3-3)**	**1**	**1**	**1**	**4 (2-3-3-4)**	**5 (2-3-3-3-4)**	**4 (2-3-3-4)**	**5 (2-3-3-3-4)**	**4 (2-3-3-4)**	**5 (2-3-3-3-4)**	**1**	**5 (2-3-3-3-4)**	**1**	**1**	**1**	**1**	**1**	**1**
Dim Code	**Exterior**																								
L101	Wheelbase [mm]	3300.0	3300.0	3300.0	3300.0	3300.0	3300.0	3750.0	3750.0	3750.0	3750.0	3750.0	3750.0	3750.0	3750.0	3750.0	3750.0	3750.0	3300.0	3300.0	3750.0	3750.0	3750.0	3750.0
L103	Length [mm]	5585.0	5531.0	5585.0	5585.0	5531.0	5531.0	6035.0	5981.0	5981.0	6035.0	6035.0	5981.0	5981.0	5981.0	5981.0	6704.0	6704.0	5585.0	5531.0	6035.0	5981.0	5981.0	6704.0
L103	Length with optional extended bumper [mm]	-	5585.0	-	-	5585.0	5585.0	-	6035.0	6035.0	-	-	6035.0	6035.0	6035.0	6035.0	6758.0	6758.0	-	5585.0	-	6035.0	6035.0	6758.0
H101C-Ford	Height [mm]	2090.5	2510.5	2089.0	2089.0	2506.0	2506.0	2538.0	2534.9	2784.5	2092.0	2092.0	2520.0	2520.0	2759.0	2759.0	2778.0	2736.0	2132.0	2561.0	2114.0	2558.0	2797.0	2780.0
W103	Width - Excluding Mirrors [mm]	2066.0	2066.0	2066.0	2066.0	2066.0	2066.0	2066.0	2066.0	2066.0	2066.0	2066.0	2066.0	2066.0	2066.0	2066.0	2066.0	2066.0	2066.0	2066.0	2066.0	2066.0	2066.0	2066 / 2126
W410	Width - Including Mirrors [mm]	2474.0	2474.0	2474.0	2474.0	2474.0	2474.0	2474.0	2474.0	2474.0	2474.0	2474.0	2474.0	2474.0	2474.0	2474.0	2474.0	2474.0	2474.0	2474.0	2474.0	2474.0	2474.0	2474.0
W411	Width - Mirrors Folded [mm]	2114.0	2114.0	2114.0	2114.0	2114.0	2114.0	2114.0	2114.0	2114.0	2114.0	2114.0	2114.0	2114.0	2114.0	2114.0	2114.0	2114.0	2114.0	2114.0	2114.0	2114.0	2114.0	2114.0
W101C-Ford	Front Track [mm]	1732.0	1732.0	1732.0	1732.0	1732.0	1732.0	1732.0	1732.0	1732.0	1732.0	1732.0	1732.0	1732.0	1732.0	1732.0	1732.0	1732.0	1732.0	1732.0	1732.0	1732.0	1732.0	1732 / 1740
W102C-Ford	Rear Track [mm]	1743.0	1743.0	1743.0	1743.0	1743.0	1743.0	1743.0	1743.0	1743.0	1743.0	1743.0	1743.0	1743.0	1743.0	1743.0	1743.0	1743.0	1743.0	1743.0	1743.0	1743.0	1743.0	1743 / 1670
L104	Front Overhang [mm]	1023.0	1023.0	1023.0	1023.0	1023.0	1023.0	1023.0	1023.0	1023.0	1023.0	1023.0	1023.0	1023.0	1023.0	1023.0	1023.0	1023.0	1023.0	1023.0	1023.0	1023.0	1023.0	1023.0
L105	Rear Overhang [mm]	1262.0	1208.0	1262.0	1262.0	1208.0	1208.0	1262.0	1208.0	1208.0	1262.0	1262.0	1208.0	1208.0	1208.0	1208.0	1931.0	1931.0	1262.0	1208.0	1262.0	1208.0	1208.0	1931.0
L105	Rear Overhang with optional extended bumper [mm]	-	1262.0	-	-	1262.0	1262.0	-	1262.0	1262.0	-	-	1262.0	1262.0	1262.0	1262.0	1985.0	1985.0	-	1262.0	-	1262.0	1262.0	1985.0
H196	Load Height (Curb) [mm]	717.0	717.0	717.0	717.0	717.0	717.0	731.0	731.0	731.0	731.0	731.0	731.0	731.0	731.0	731.0	707.0	707.0	733.0	733.0	730.0	730.0	730.0	712.0
H508	Side Cargo Door Opening Height [mm]	-	-	-	-	-	-	-	-	-	-	-	-	-	-	-	-	-	1260.0	1601.0	1260.0	1601.0	1601.0	1601.0
L508	Side Cargo Door Opening Width - Hinged [mm]	-	-	-	-	-	-	-	-	-	-	-	-	-	-	-	-	-	1300.0	1300.0	1300.0	1300.0	1300.0	1300.0
L508	Side Cargo Door Opening Width - Sliding [mm]	-	-	-	-	-	-	-	-	-	-	-	-	-	-	-	-	-	1300.0	1300.0	1300.0	1300.0	1300.0	1300.0
H202	Rear Cargo Door Opening Height [mm]	1192.0	1595.0	1192.0	1192.0	1595.0	1595.0	1192.0	1595.0	1834.0	1192.0	1192.0	1595.0	1595.0	1834.0	1834.0	1834.0	1834.0	1258.0	1648.0	1258.0	1648.0	1887.0	1887.0
W203	Rear Cargo Door Opening Width [mm]	1520.0	1520.0	1520.0	1520.0	1520.0	1520.0	1520.0	1520.0	1520.0	1520.0	1520.0	1520.0	1520.0	1520.0	1520.0	1520.0	1520.0	1568.0	1568.0	1568.0	1568.0	1568.0	1568.0
	Interior																								
H61	Head Room - First Row [mm]	1037.0	1320.0	1037.0	1037.0	1320.0	1320.0	1037.0	1320.0	1437.0	1037.0	1037.0	1320.0	1320.0	1437.0	1437.0	1437.0	1437.0	1037.0	1320.0	1037.0	1320.0	1437.0	1437.0
H63	Head Room - Second Row [mm]	-	-	1045.0	1045.0	1417.0	1417.0	-	-	-	1045.0	1045.0	1417.0	1417.0	1656.0	1656.0	-	1656.0	-	-	-	-	-	-
H86	Head Room - Third Row [mm]	-	-	1032.0	1032.0	1417.0	1417.0	-	-	-	1032.0	1032.0	1417.0	1417.0	1657.0	1657.0	-	1657.0	-	-	-	-	-	-
H86-4th	Head Room - Fourth Row [mm]	-	-	-	983.0	-	1417.0	-	-	-	983.0	983.0	1417.0	1417.0	1657.0	1657.0	-	1657.0	-	-	-	-	-	-
H86-5th	Head Room - Fifth Row [mm]	-	-	-	-	-	-	-	-	-	-	969.0	-	1336.0	-	1557.0	-	1557.0	-	-	-	-	-	-
L33	Maximum Leg Room - First Row [mm]	1050.0	1050.0	1050.0	1050.0	1050.0	1050.0	1050.0	1050.0	1050.0	1050.0	1050.0	1050.0	1050.0	1050.0	1050.0	1050.0	1050.0	1050.0	1050.0	1050.0	1050.0	1050.0	1050.0
L34	Leg Room - First Row [mm]	1009.0	1009.0	1009.0	1009.0	1009.0	1009.0	1009.0	1009.0	1009.0	1009.0	1009.0	1009.0	1009.0	1009.0	1009.0	1009.0	1009.0	1009.0	1009.0	1009.0	1009.0	1009.0	1009.0
L51	Leg Room - Second Row [mm]	-	-	855.0	855.0	855.0	855.0	-	-	-	855.0	855.0	855.0	855.0	855.0	855.0	-	855.0	-	-	-	-	-	-
L86	Leg Room - Third Row [mm]	-	-	903.0	903.0	903.0	903.0	-	-	-	903.0	903.0	903.0	903.0	903.0	903.0	-	903.0	-	-	-	-	-	-
L86-4th	Leg Room - Fourth Row [mm]	-	-	-	903.0	-	903.0	-	-	-	903.0	903.0	903.0	903.0	903.0	903.0	-	903.0	-	-	-	-	-	-
L86-5th	Leg Room - Fifth Row [mm]	-	-	-	-	-	-	-	-	-	-	903.0	-	903.0	-	903.0	-	903.0	-	-	-	-	-	-
W5	Hip Room - First Row [mm]	1543.0	1543.0	1543.0	1543.0	1543.0	1543.0	1543.0	1543.0	1543.0	1543.0	1543.0	1543.0	1543.0	1543.0	1543.0	1543.0	1543.0	1543.0	1543.0	1543.0	1543.0	1543.0	1543.0
W6	Hip Room - Second Row [mm]	-	-	1767.0	1767.0	1767.0	1767.0	-	-	-	1767.0	1767.0	1767.0	1767.0	1767.0	1767.0	-	1767.0	-	-	-	-	-	-
W86	Hip Room - Third Row [mm]	-	-	1709.0	1709.0	1709.0	1709.0	-	-	-	1709.0	1709.0	1709.0	1709.0	1709.0	1709.0	-	1709.0	-	-	-	-	-	-
W86-4th	Hip Room - Fourth Row [mm]	-	-	-	1728.0	-	1728.0	-	-	-	1728.0	1728.0	1728.0	1728.0	1728.0	1728.0	-	1728.0	-	-	-	-	-	-
W86-5th	Hip Room - Fifth Row [mm]	-	-	-	-	-	-	-	-	-	-	1728.0	-	1728.0	-	1728.0	-	1728.0	-	-	-	-	-	-
W3	Shoulder Room - First Row [mm]	1724.0	1724.0	1724.0	1724.0	1724.0	1724.0	1724.0	1724.0	1724.0	1724.0	1724.0	1724.0	1724.0	1724.0	1724.0	1724.0	1724.0	1724.0	1724.0	1724.0	1724.0	1724.0	1724.0
W4	Shoulder Room - Second Row [mm]	-	-	1813.0	1813.0	1813.0	1813.0	-	-	-	1813.0	1813.0	1813.0	1813.0	1813.0	1813.0	-	1813.0	-	-	-	-	-	-
W85	Shoulder Room - Third Row [mm]	-	-	1703.0	1703.0	1703.0	1703.0	-	-	-	1703.0	1703.0	1703.0	1703.0	1703.0	1703.0	-	1703.0	-	-	-	-	-	-
W85-4th	Shoulder Room - Fourth Row [mm]	-	-	-	1722.0	-	1722.0	-	-	-	1722.0	1722.0	1722.0	1722.0	1722.0	1722.0	-	1722.0	-	-	-	-	-	-
W85-5th	Shoulder Room - Fifth Row [mm]	-	-	-	-	-	-	-	-	-	-	1722.0	-	1722.0	-	1722.0	-	1722.0	-	-	-	-	-	-
L202	Cargo Length Front (at Floor) [mm]	3150.0	3150.0	3150.0	3150.0	3150.0	3150.0	3600.0	3600.0	3600.0	3600.0	3600.0	3600.0	3600.0	3600.0	3600.0	4323.0	4323.0	3200.0	3200.0	3650.0	3650.0	3650.0	4373.0
L204	Cargo Length Front (at Belt) [mm]	2924.0	2924.0	2924.0	2924.0	2924.0	2924.0	3374.0	3374.0	3374.0	3374.0	3374.0	3374.0	3374.0	3374.0	3374.0	4097.0	4097.0	2943.0	2943.0	3393.0	3393.0	3393.0	4116.0
W201	Cargo Width Between Wheelhouse [mm]	1364.0	1364.0	1364.0	1364.0	1364.0	1364.0	1364.0	1364.0	1364.0	1364.0	1364.0	1364.0	1364.0	1364.0	1364.0	1364.0	1364.0	1392.0	1392.0	1392.0	1392.0	1392.0	1392 / 1154
H505	Cargo Height Maximum [mm]	1340.0	1718.0	1340.0	1340.0	1718.0	1718.0	1340.0	1718.0	1956.0	1340.0	1340.0	1718.0	1718.0	1956.0	1956.0	1956.0	1956.0	1446.0	1830.0	1446.0	1830.0	2069.0	2069.0
	Cargo Capacity																								
V6	Cargo Volume Behind First Row (SUV/Van)	6357.1	8288.3	6356.0	6357.1	8288.1	8288.3	7260.4	9517.3	10834.0	7260.4	6328.8	9517.3	8582.8	10834.0	9899.6	13079.6	12046.0	6984.6	8925.9	7862.6	10110.6	11447.1	13797.3
V7	Cargo Volume Behind Second Row (SUV/Van)	-	-	4298.4	4298.5	5605.0	5603.9	-	-	-	5182.0	4247.5	6790.4	5855.9	7730.5	6798.9	-	8866.0	-	-	-	-	-	-
V9	Cargo Volume Behind Third Row (SUV/Van)	-	-	2668.0	2667.4	3539.5	3539.6	-	-	-	3525.4	2591.0	4726.1	3791.6	5380.2	4445.7	-	6512.9	-	-	-	-	-	-
V12	Cargo Volume Behind Fourth Row (SUV/Van)	-	-	-	-	-	-	-	-	-	1985.0	1384.7	2658.9	2061.5	3029.9	2429.6	-	5210.3	-	-	-	-	-	-
V13	Cargo Volume Behind Fifth Row (SUV/Van)	-	-	-	-	-	-	-	-	-	-	-	-	-	-	-	-	2845.8	-	-	-	-	-	-
V14	Cargo Volume - Max (Van)	-	-	-	-	-	-	-	-	-	-	-	-	-	-	-	-	-	8071.5	10301.4	8949.5	11486.1	13002.3	15352.5
V15	Cargo Volume - Front Seat (Van)	-	-	-	-	-	-	-	-	-	-	-	-	-	-	-	-	-	1086.9	1375.5	1086.9	1375.5	1555.2	1555.2

NOTE — DIMENSIONS ARE METRIC.
(Cont'd next page)

TRANSIT
DIMENSIONAL DATA
138” WB CHASSIS CAB / CUTAWAY

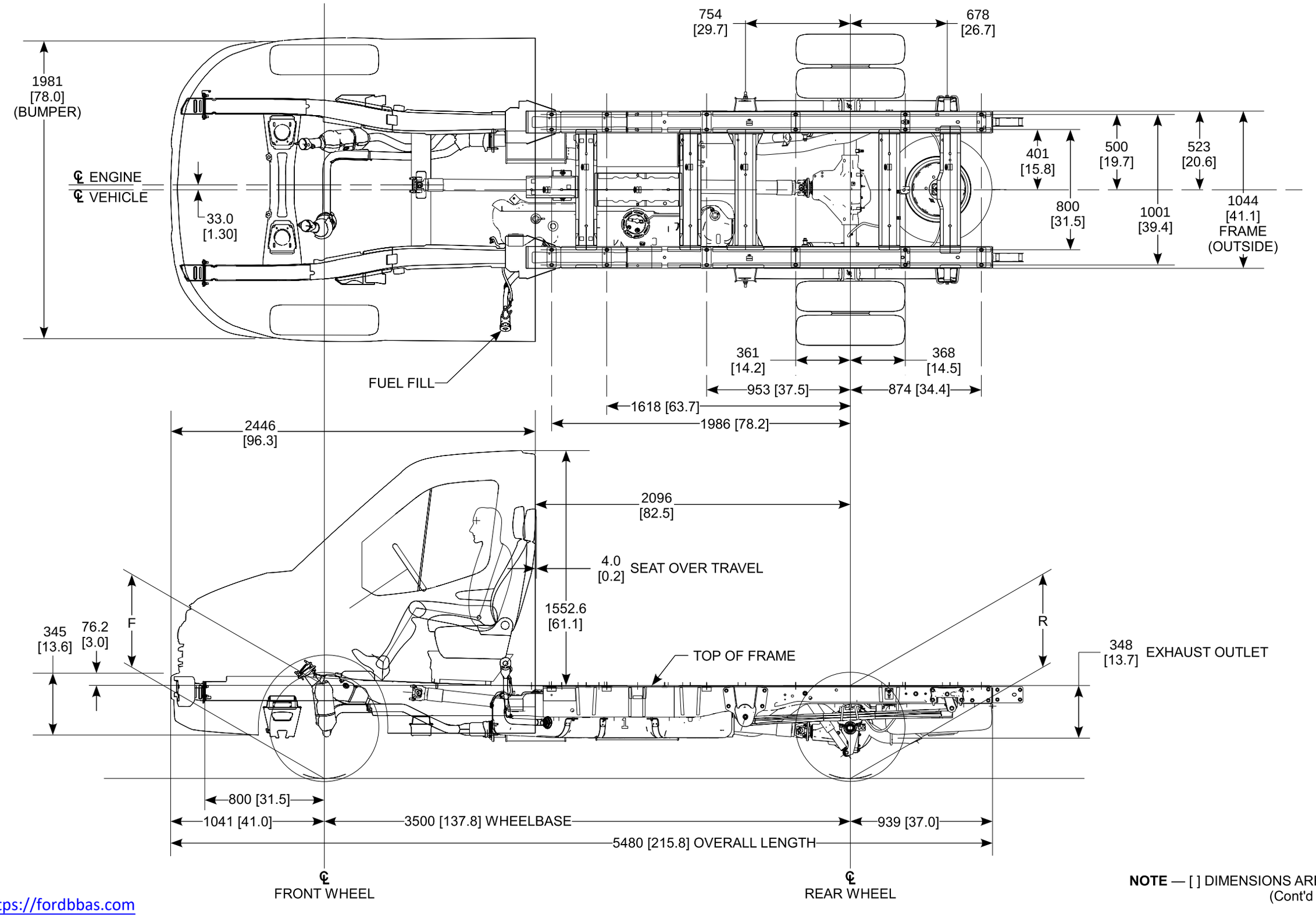

NOTE — [ ] DIMENSIONS ARE INCHES.

(Cont'd next page)

TRANSIT
DIMENSIONAL DATA
156” WB CHASSIS CAB / CUTAWAY

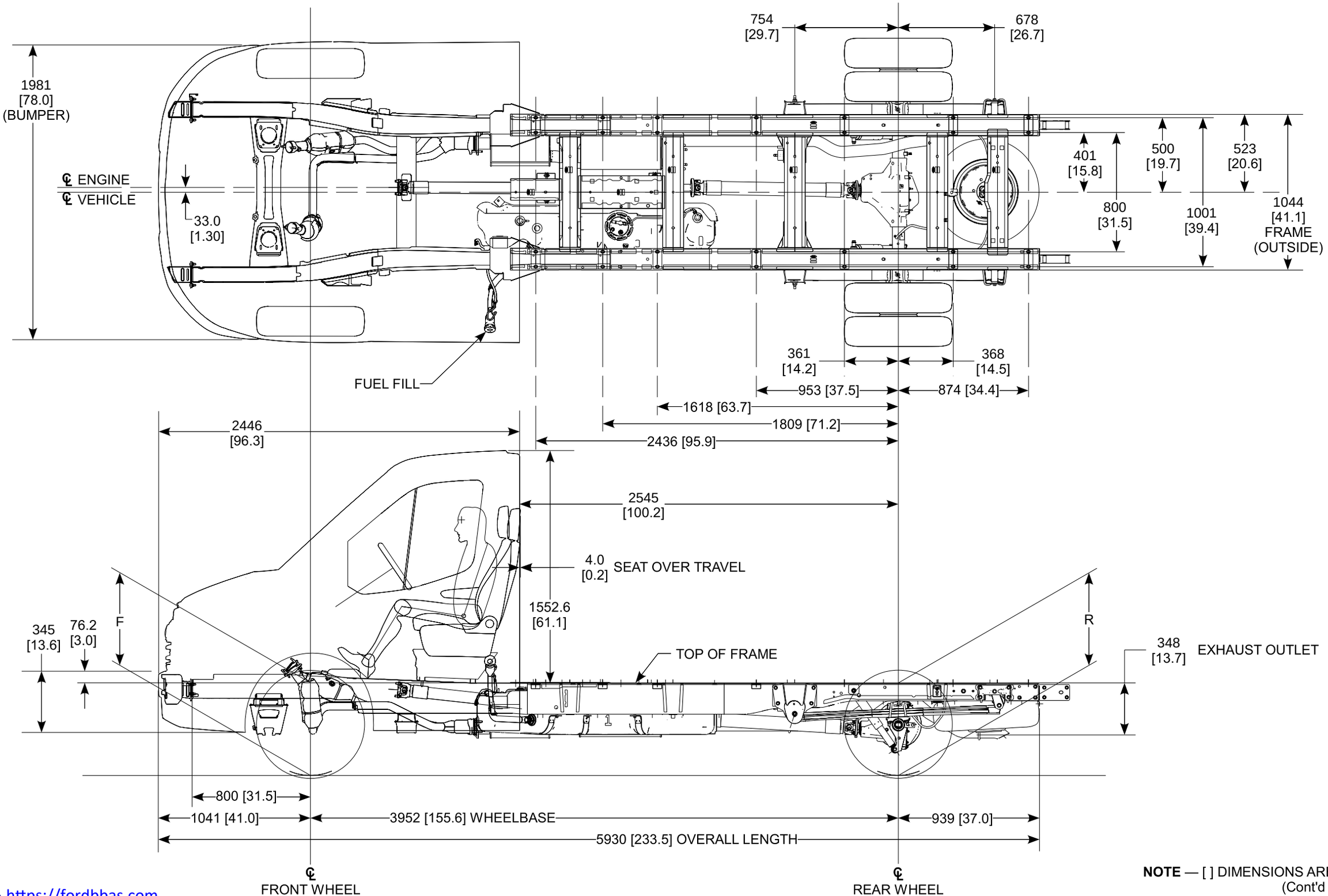

NOTE — [ ] DIMENSIONS ARE INCHES.

(Cont'd next page)

TRANSIT
DIMENSIONAL DATA
178” WB CHASSIS CAB / CUTAWAY

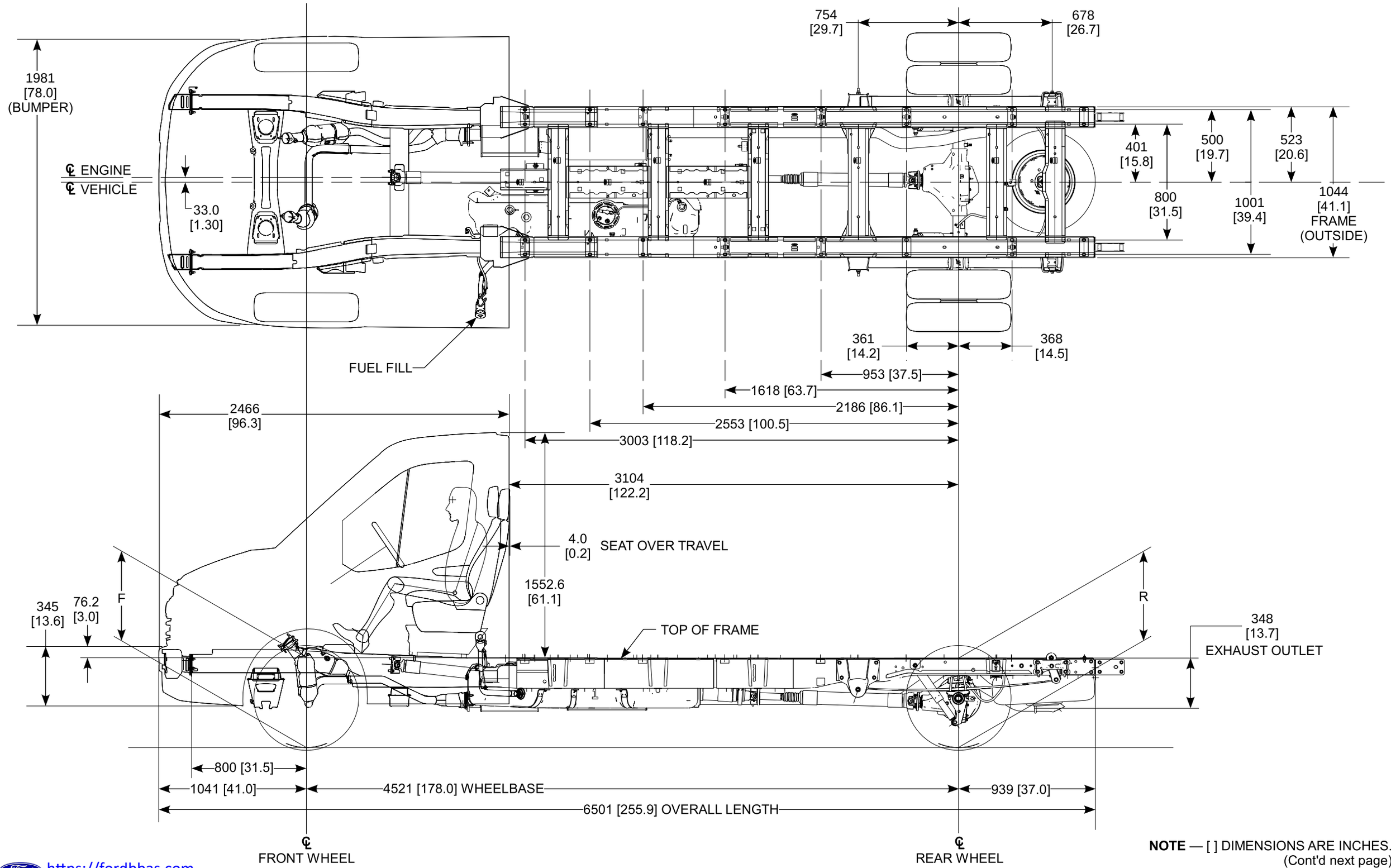

NOTE — [ ] DIMENSIONS ARE INCHES.

(Cont'd next page)

TRANSIT
DIMENSIONAL DATA
CHASSIS CAB / CUTAWAY

ENGLISH UNITS

Dim Code	TRANSIT: CHASSIS CAB / CUTAWAY	Regular T250 CC/CA SRW	Regular T350 HD CC/CA DRW	Regular T350 HD CC/CA DRW	Long T250 CC/CA SRW	Long T350 CC/CA SRW	Long T350 HD CC/CA DRW	Long T350 HD CC/CA DRW	Super Jumbo T350 HD CC/CA DRW	Super Jumbo T350 HD CC/CA DRW
L101	Wheelbase [in]	138.0	138.0	138.0	155.7	155.7	155.7	155.7	178.0	178.0
L103	Overall Length [in]	223.3	223.3	223.3	241.1	241.1	241.1	241.1	263.4	263.4
W101C	Front Track [in]	68.2	68.5	68.5	68.2	68.2	68.5	68.5	68.5	68.5
W102C	Rear Track [in]	68.6	65.7	65.7	68.6	68.6	65.7	65.7	65.7	65.7
N/A	Rear Axle to End of Frame [in] or Rear Overhang	45.1	45.1	45.1	45.1	45.1	45.1	45.1	45.1	45.1
R	Load Height (Loaded) [in]	25.0	24.7	24.3	25.8	25.4	25.6	25.3	24.9	24.6
N/A	Height at Top of Steering Wheel (Loaded) [in]	60.5	59.6	59.4	60.2	60.1	59.2	59.1	60.0	59.9
N/A	Rear Axle Clearance (Loaded) [in]	5.6	5.5	5.5	6.1	5.9	6.1	6.0	5.9	6.0

METRIC UNITS

Dim Code	TRANSIT: CHASSIS CAB / CUTAWAY	Regular T250 CC/CA SRW	Regular T350 HD CC/CA DRW	Regular T350 HD CC/CA DRW	Long T250 CC/CA SRW	Long T350 CC/CA SRW	Long T350 HD CC/CA DRW	Long T350 HD CC/CA DRW	Super Jumbo T350 HD CC/CA DRW	Super Jumbo T350 HD CC/CA DRW
L101	Wheelbase [mm]	3504	3504	3504	3954	3954	3954	3954	4522	4522
L103	Overall Length [mm]	5673	5673	5673	6123	6123	6123	6123	6691	6691
W101C	Front Track [mm]	1732	1740	1740	1732	1732	1740	1740	1740	1740
W102C	Rear Track [mm]	1743	1670	1670	1743	1743	1670	1670	1670	1670
N/A	Rear Axle to End of Frame [mm] or Rear Overhang	1146	1146	1146	1146	1146	1146	1146	1146	1146
R	Load Height (Loaded) [mm]	634	627	616	656	645	649	643	633	624
N/A	Height at Top of Steering Wheel (Loaded) [mm]	1537	1513	1510	1529	1526	1503	1500	1523	1521
N/A	Rear Axle Clearance (Loaded) [mm]	141	140	139	155	151	154	153	150	153

TRANSIT
REAR FRAME EXTENSION
CHASSIS CAB / CUTAWAY

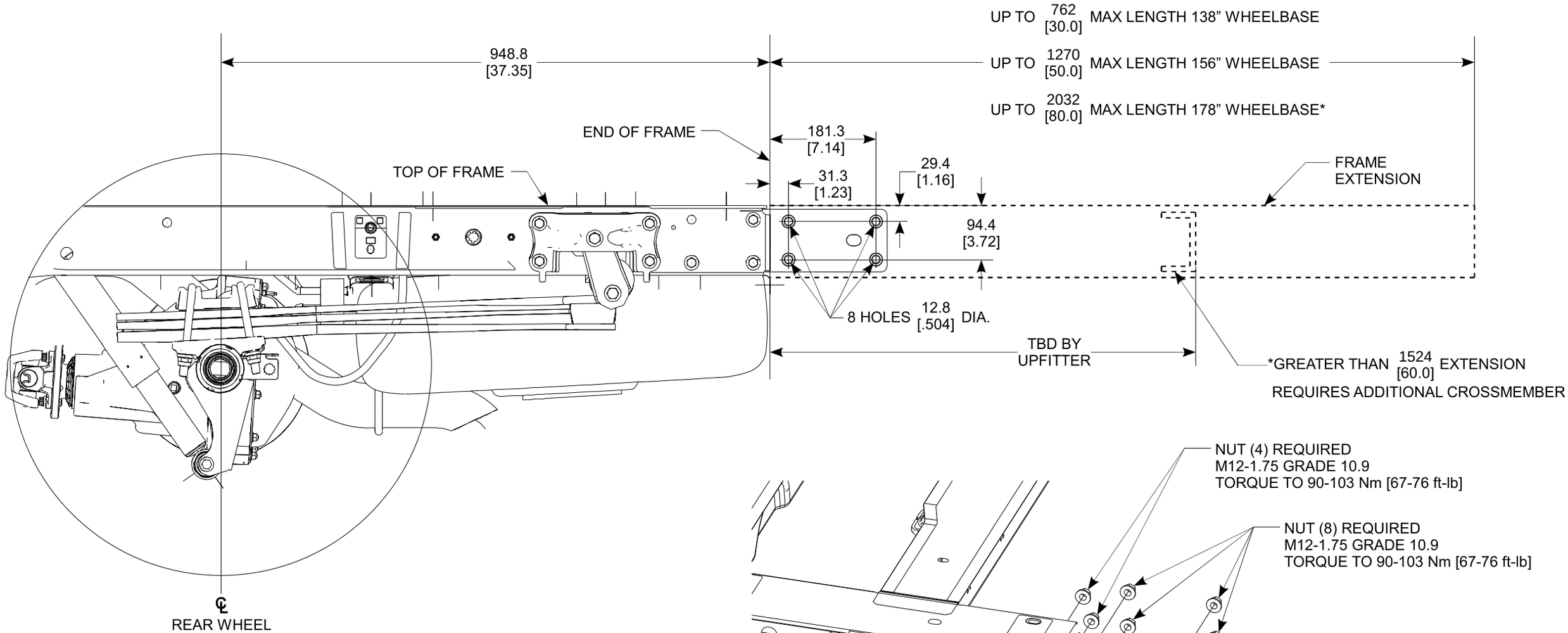

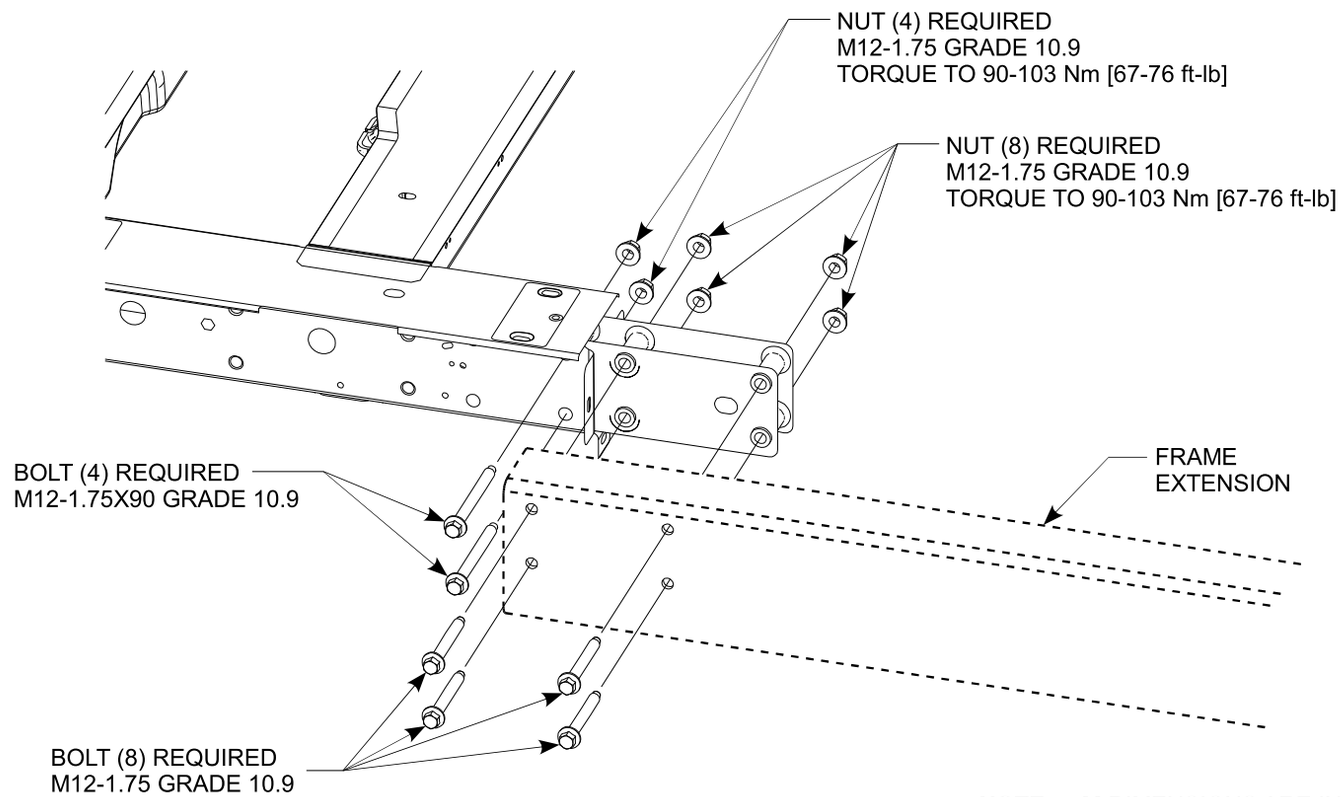

NOTE — [ ] DIMENSIONS ARE INCHES.

TRANSIT SECOND UNIT BODY

Refer to the Transit Incomplete Vehicle Manual (IVM) and the *Transit Body and Equipment Mounting Manual (BEMM)*, Body Section, 5.1.6 Chassis Cab / Cutaway at https://fordbbas.com for additional SUB mounting information.

- A full length structural body should be hard-mounted to all available inboard and outboard frame hole locations, however, **fasteners are not required in the 2nd and 3rd rows of LH and RH frame rail inboard holes alongside the fuel tank and exhaust muffler**. Ford Motor company recommends 25mm head-size flange M10 Grade 10.9 W520113-S442 nuts & W703776-S442 bolts, or equivalent. Ref: BEMM Body Section, 5.1.6 Chassis Cab / Cutaway.
- Do not weld to the flanges of the side rails.
- The recommended attachment fastener for the Cutaway Back-of-Cab non-threaded nutplates is a MR8 Taptite 2000® bolt or equivalent. Ref: BEMM Body Section, 5.1.7 Cutaways.
- Note the requirement for a Cutaway floor spacer between the cab and an attached body. Ref: BEMM Body Section, 5.1.7 Cutaway – Floor Spacer.

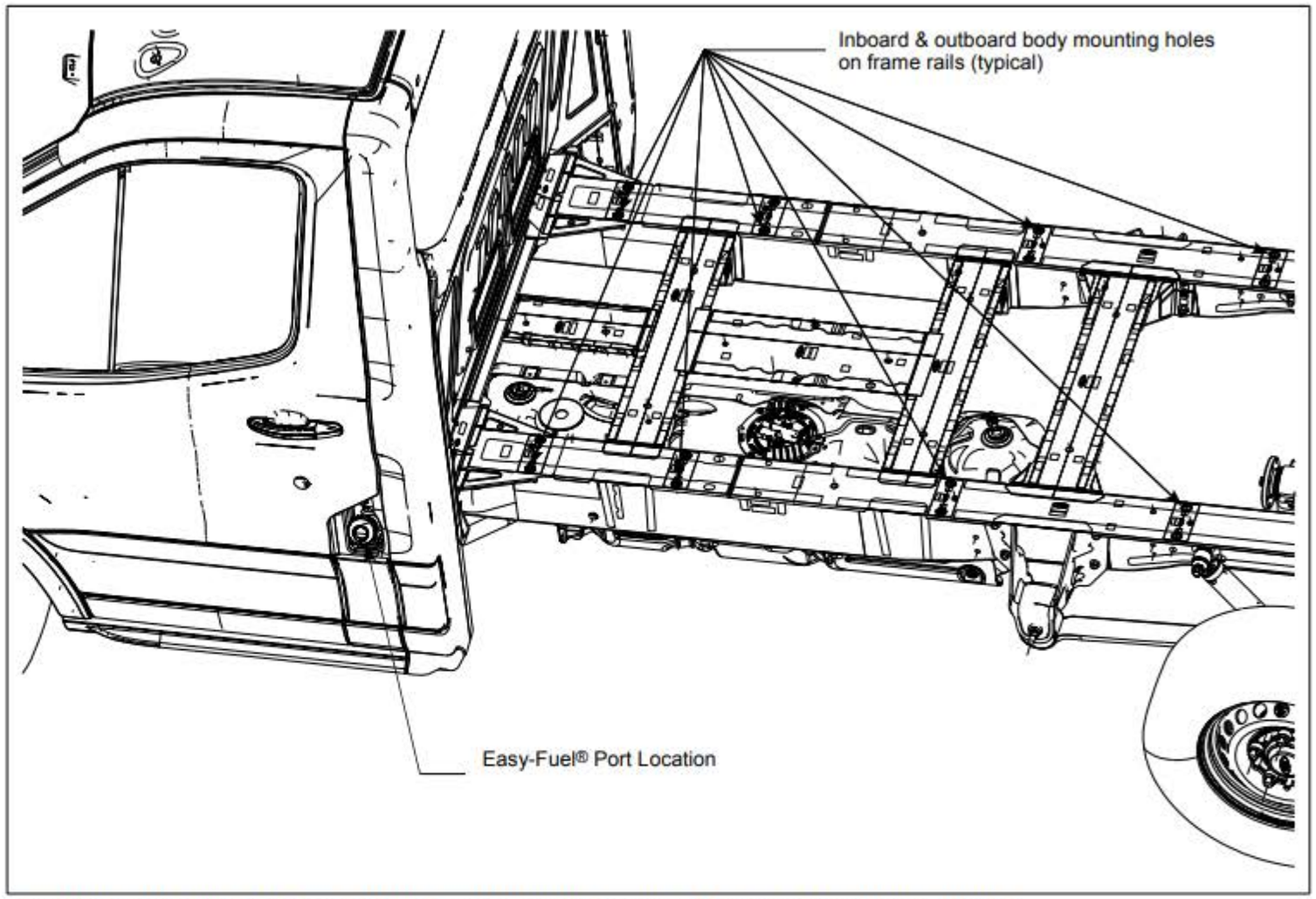

TRANSIT CHASSIS CAB & CUTAWAY SECOND UNIT BODY FRAME RAIL MOUNTING HOLES

TRANSIT
BACK OF CAB MOUNTING HOLES
CUTAWAY

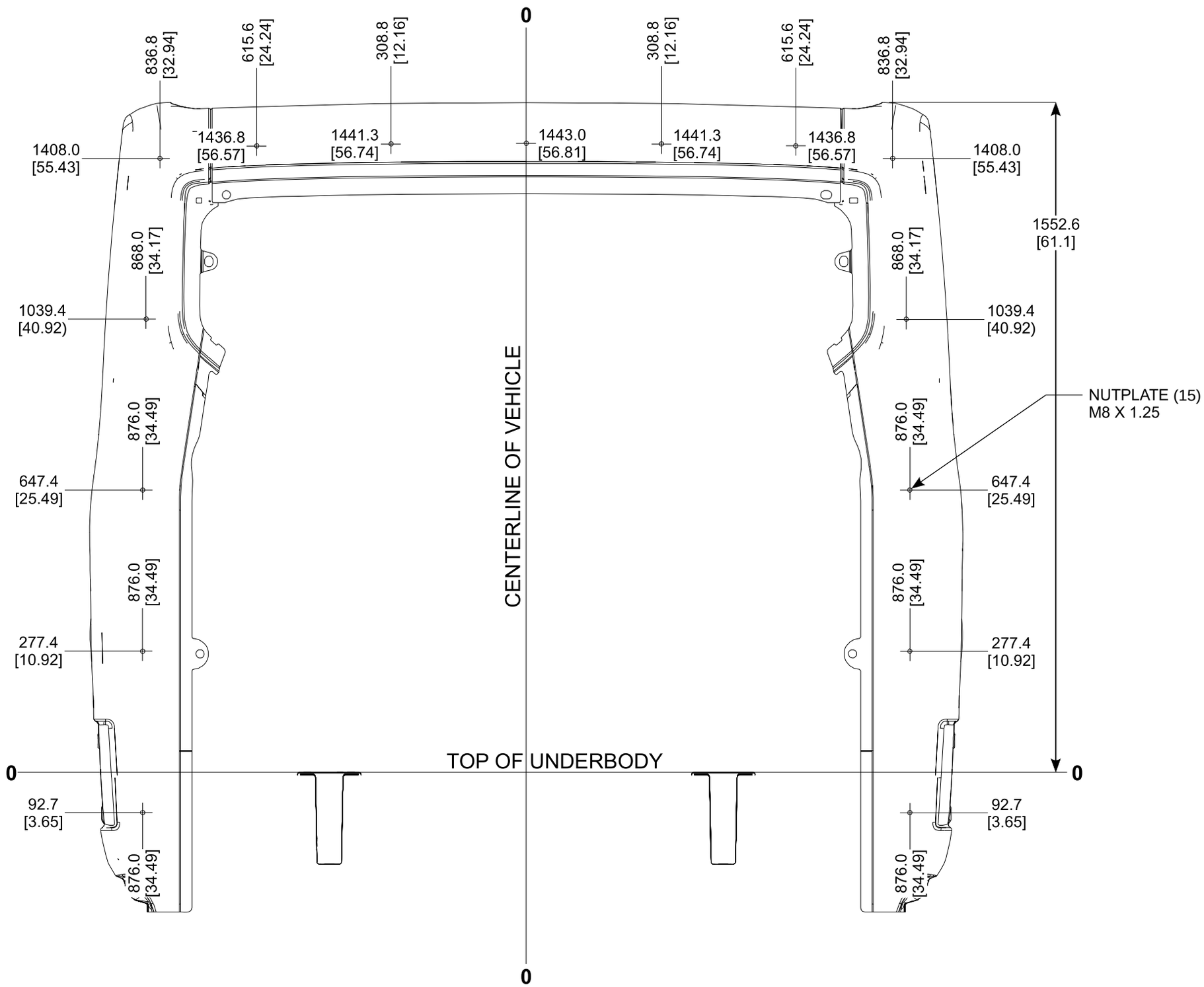

NOTE — [ ] DIMENSIONS ARE INCHES.

(Cont'd next page)

TRANSIT
FUEL TANKS
ALL MODELS

GASOLINE FUEL SYSTEM

EXTENDED RANGE SINGLE FU/TNK

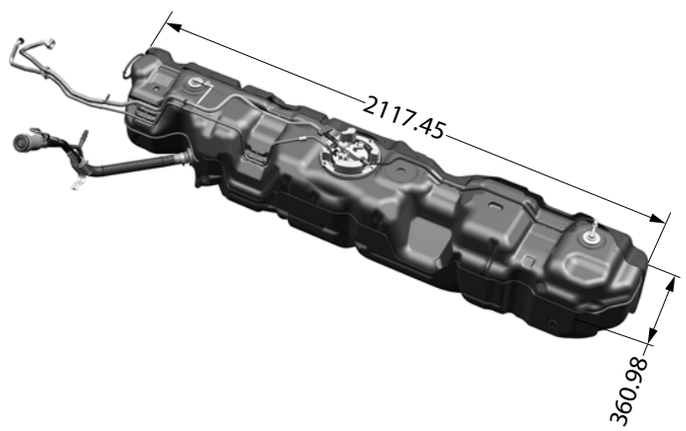

SINGLE FUEL TANK

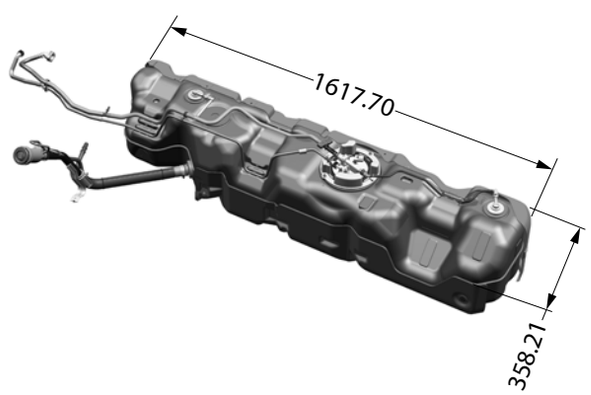

DIESEL FUEL SYSTEM

EXTENDED RANGE SINGLE FU/TNK

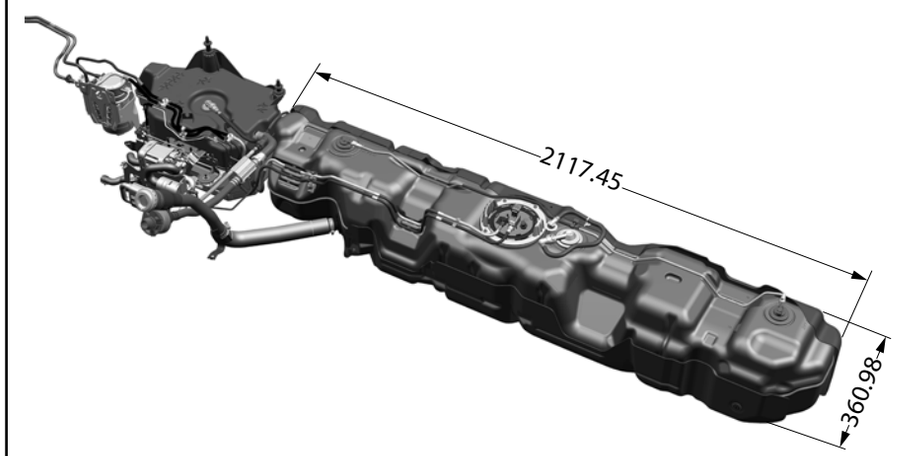

SINGLE FUEL TANK

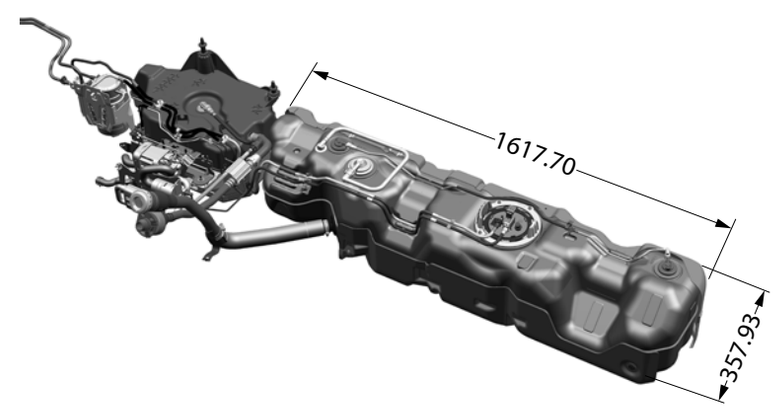

TRANSIT
REAR AXLE TRACK DIMENSIONS
SRW & DRW

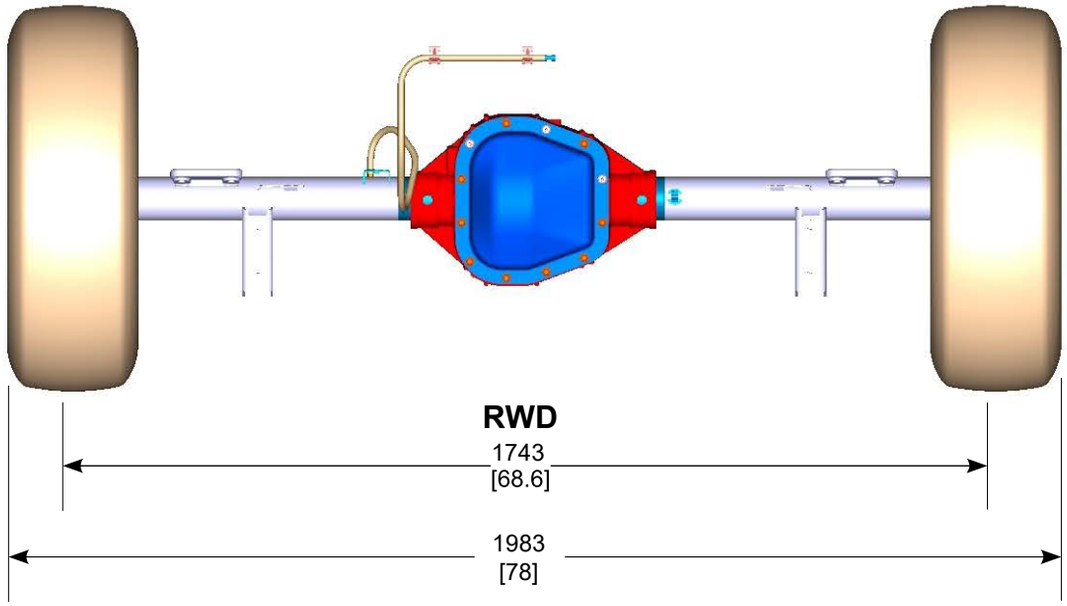

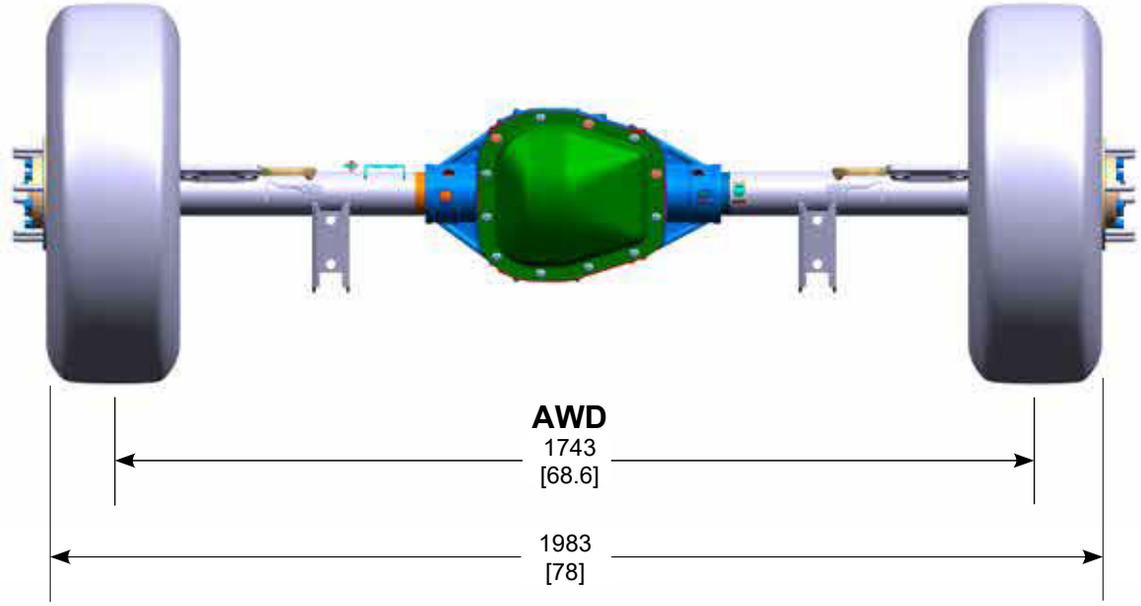

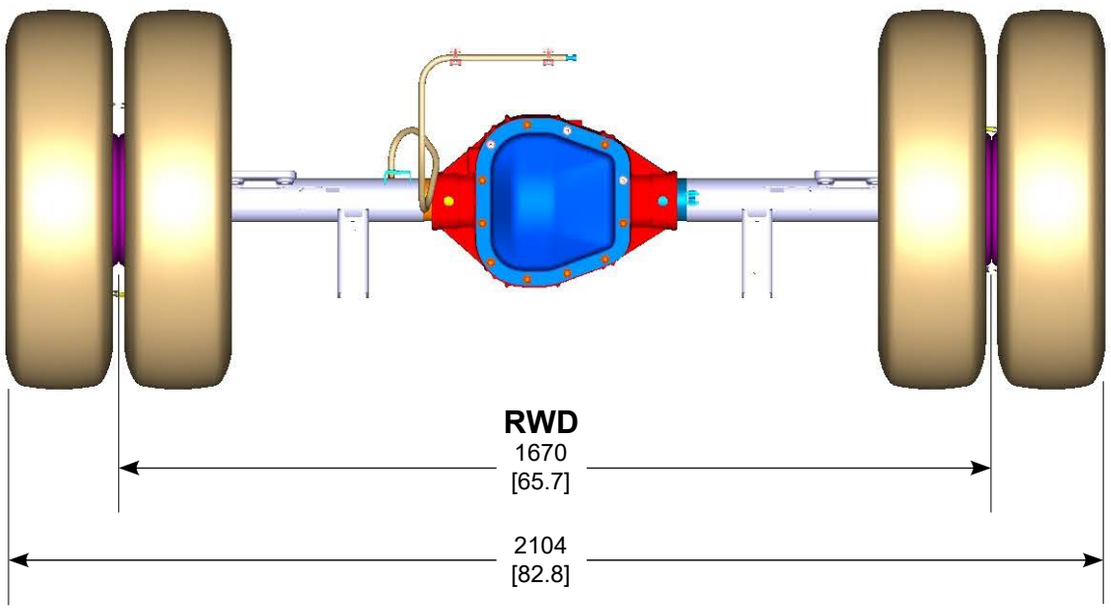

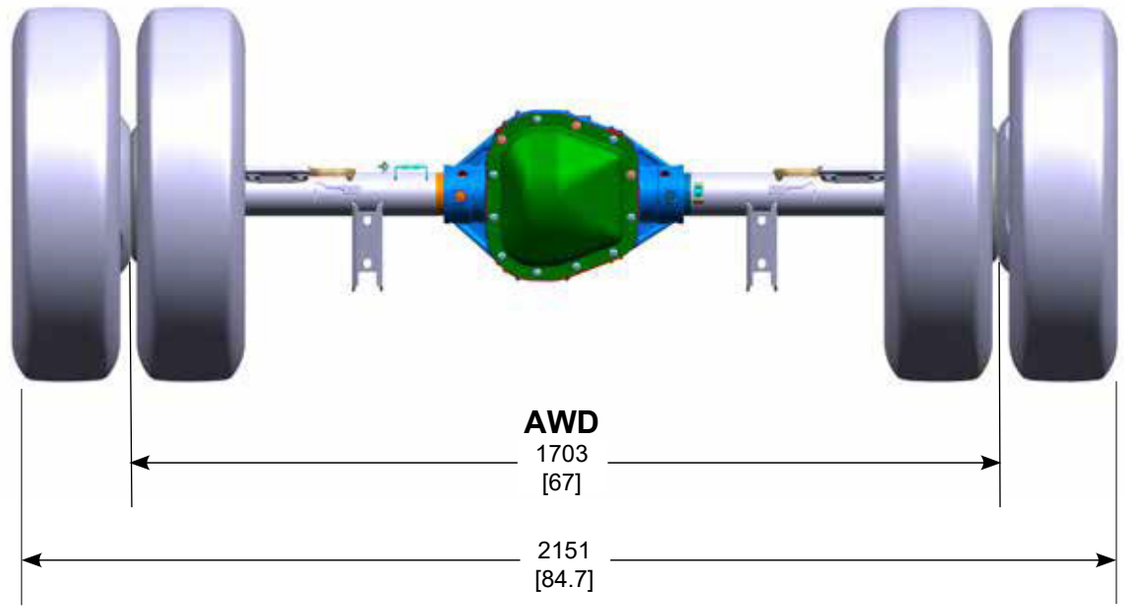

NOTE — [ ] DIMENSIONS ARE INCHES.

TRANSIT
EXHAUST EXTENSION KIT
CHASSIS CAB / CUTAWAY

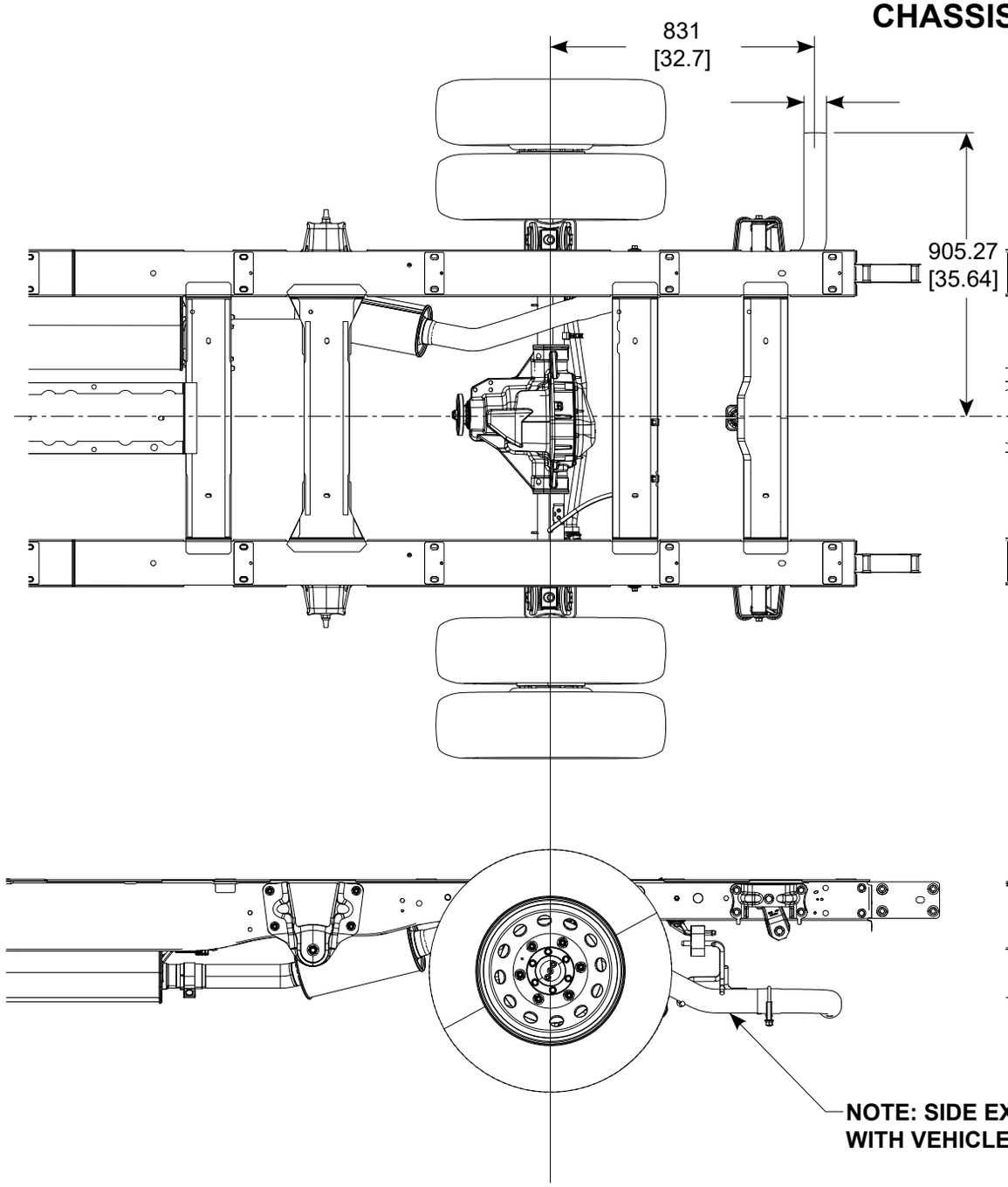

TRANSIT EXTENDED EXHAUST
GASOLINE ENGINE
ALL WB CHASSIS CAB /CUTAWAY

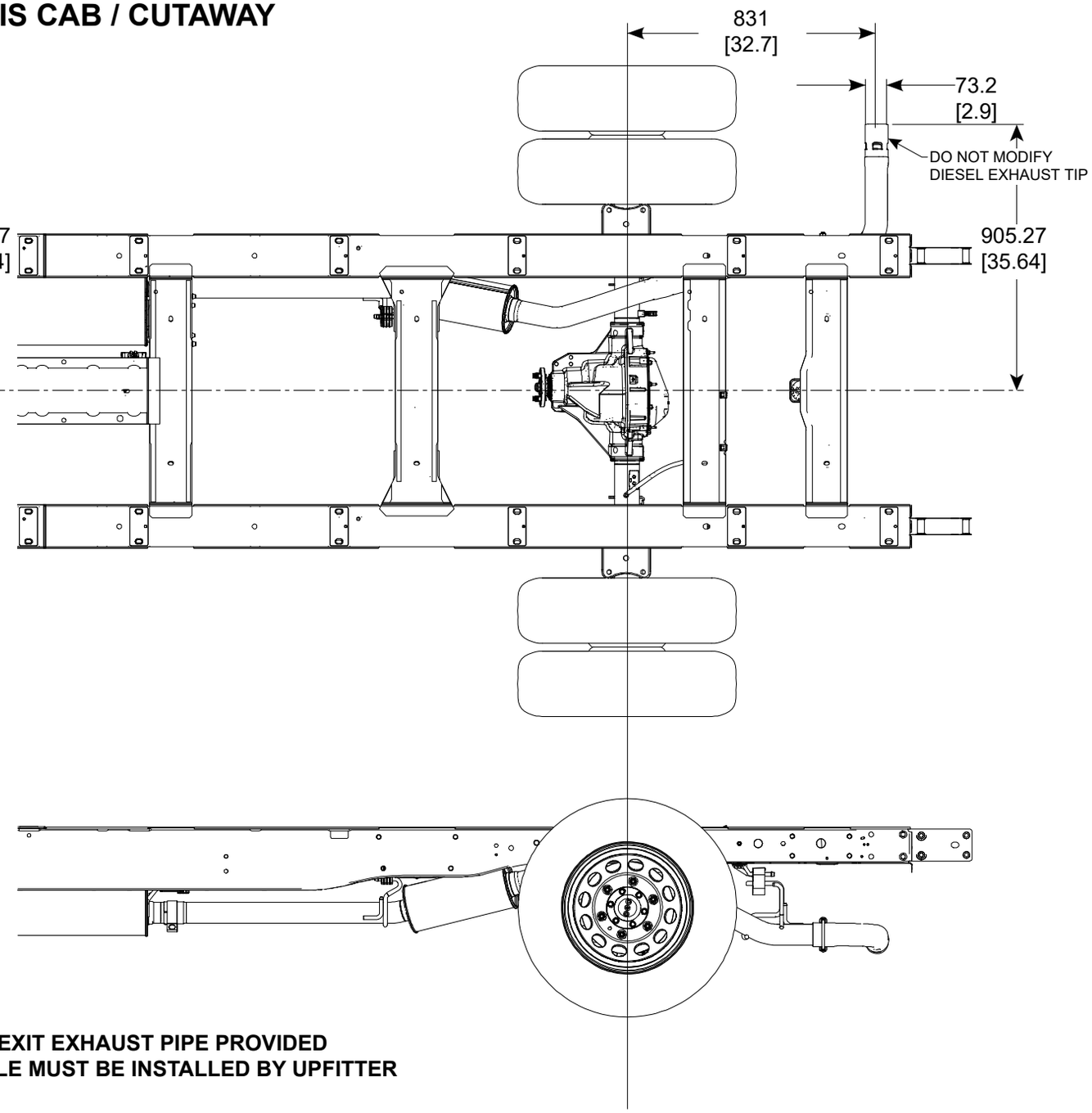

TRANSIT EXTENDED EXHAUST
DIESEL ENGINE
ALL WB CHASSIS CAB / CUTAWAY

NOTE — [ ] DIMENSIONS ARE INCHES.

TRANSIT
FRONT SURFACE AREA WORKSHEET
CHASSIS CAB / CUTAWAY

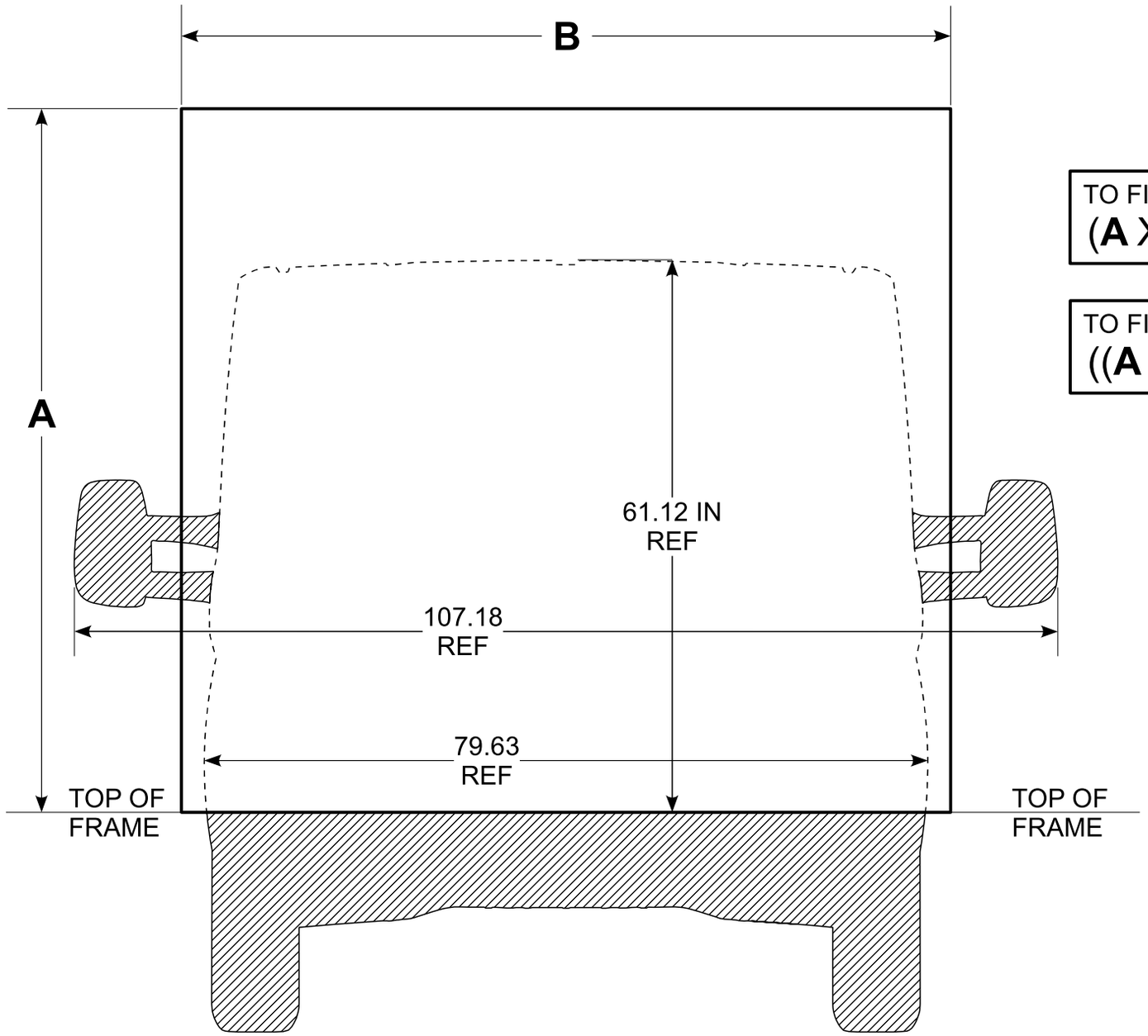

A = BOX HEIGHT (INCHES)
B = BOX WIDTH (INCHES)

TO FIND **FRONT SURFACE AREA (SQ. INCHES):**
(**A** X **B**) + 1429.7 = _____

TO FIND **FRONT SURFACE AREA (SQ. FEET):**
((**A** X **B**) / 144) + 9.93 = _____

Below Frame Shaded Area =
728601 / (25.4 X 25.4) = 1129.3338 SQ. IN.
1129.3338 / (12 X 12) = 7.8426 SQ. FT.

Mirror Shaded Area =
(96882.4 X 2) / (25.4 X 25.4) = 300.3360 SQ. IN.
300.3360 / (12 X 12) = 2.0857 SQ. FT.

Total Shaded Area =
922365.8 / (25.4 X 25.4) = 1429.6698 SQ. IN.
1429.6698 / (12 X 12) = 9.9282 SQ. FT.

SRW TRANSIT CC/CA FRONT SURFACE AREA WORKSHEET

(Cont'd next page)

TRANSIT
FRONT SURFACE AREA WORKSHEET
CHASSIS CAB / CUTAWAY (CONT'D)

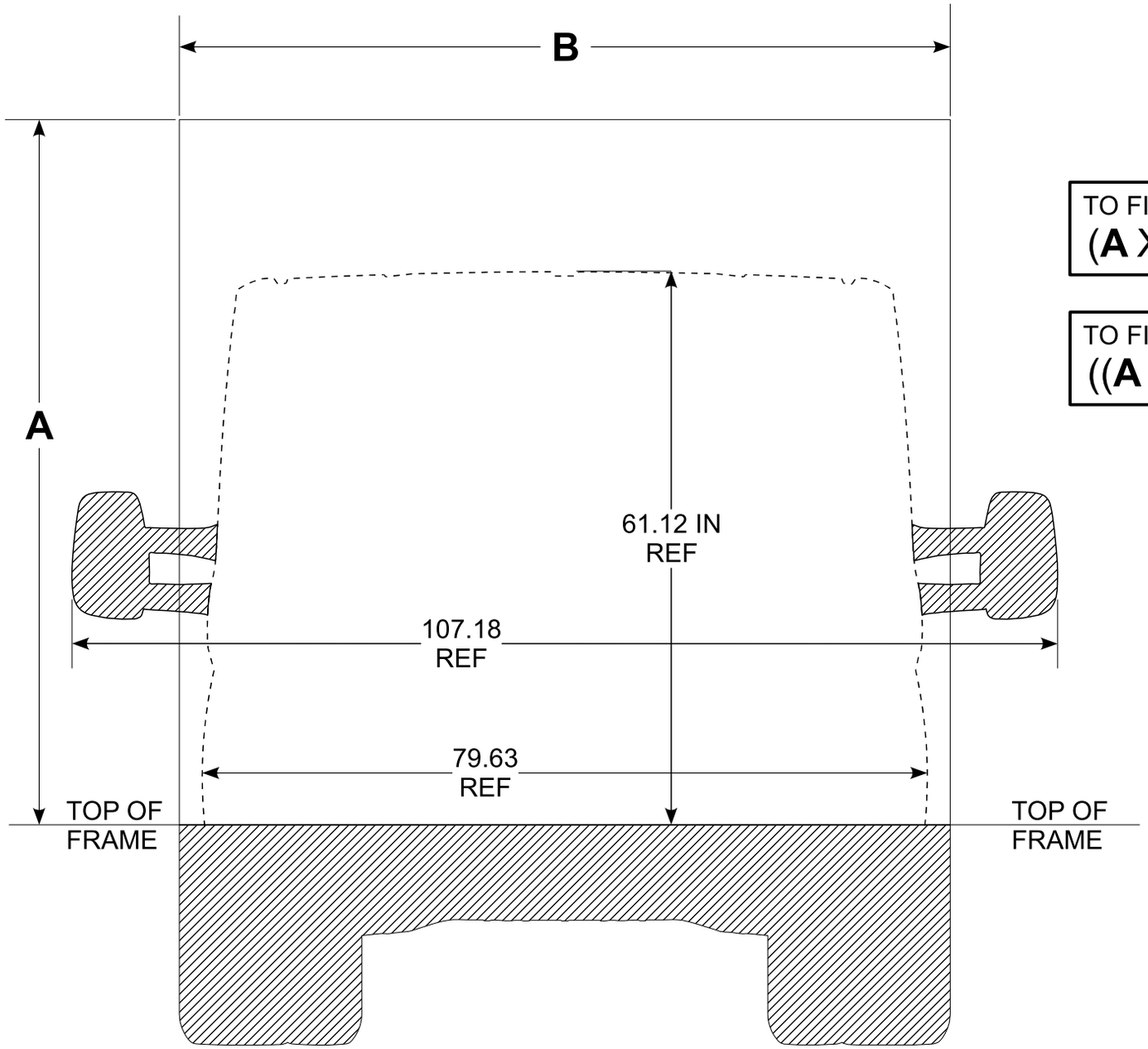

A = BOX HEIGHT (INCHES)
B = BOX WIDTH (INCHES)

TO FIND **FRONT SURFACE AREA (SQ. INCHES):**
(**A** X **B**) + 1715.6 = _____

TO FIND **FRONT SURFACE AREA (SQ. FEET):**
((**A** X **B**) / 144) + 11.91 = _____

Below Frame Shaded Area =
913123.8 / (25.4 X 25.4) = 1415.3447 SQ. IN.
1415.3447 / (12 X 12) = 9.8287 SQ. FT.

Mirror Shaded Area =
(96882.4 X 2) / (25.4 X 25.4) = 300.3360 SQ. IN.
300.3360 / (12 X 12) = 2.0857 SQ. FT.

Total Shaded Area =
1106888.6 / (25.4 X 25.4) = 1715.6808 SQ. IN.
1715.6808 / (12 X 12) = 11.9144 SQ. FT.

DRW TRANSIT CC/CA FRONT SURFACE AREA WORKSHEET

TRANSIT
SEAT H-POINT
ALL MODELS

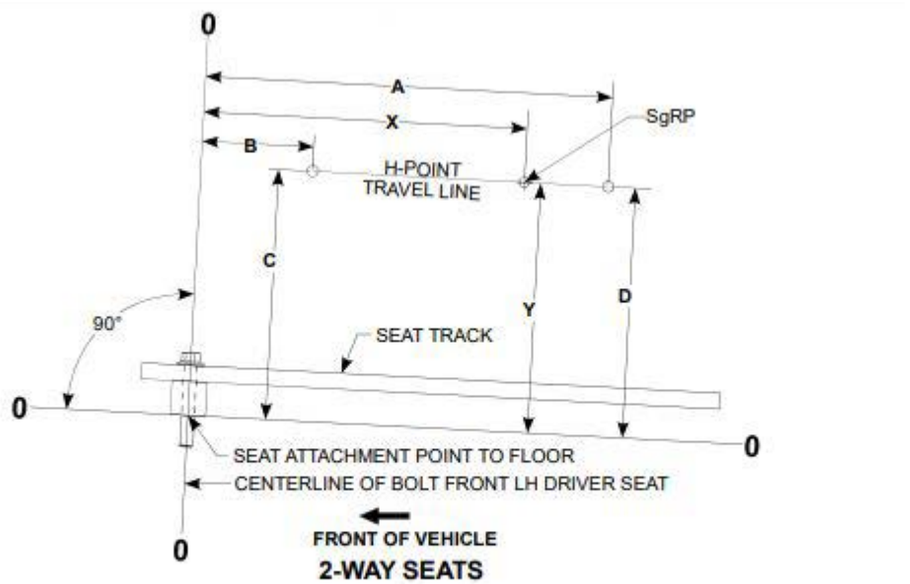

2-WAY SEATS

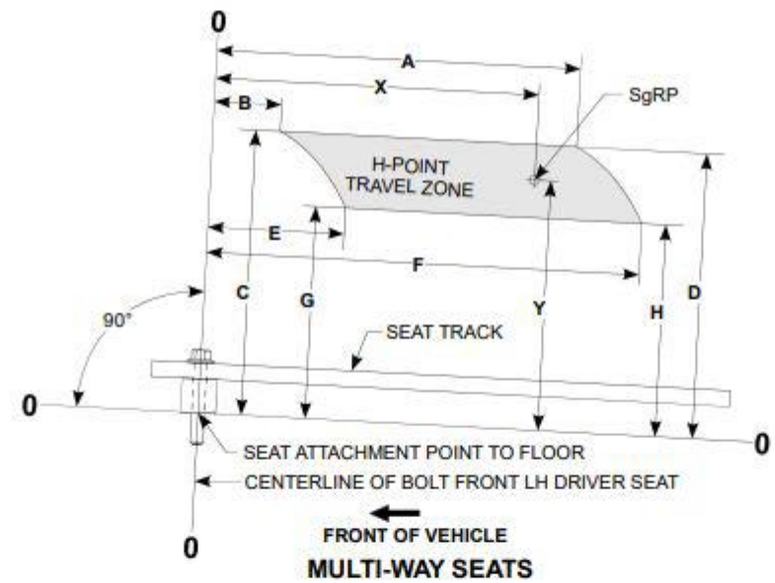

MULTI-WAY SEATS

SEAT TRAVEL DATA										
	Seat Dimensions								SgRP Location	
Seat Model	A	B	C	D	E	F	G	H	X	Y
2-Way Seat	302 [11.9]	54 [2.1]	449 [17.7]	449 [17.7]	—	—	—	—	261 [10.3]	449 [17.7]
4-Way Swivel	301 [11.9]	53 [2.1]	476 [17.7]	476 [17.7]	45 [1.9]	294 [11.6]	446 [17.9]	446 [17.9]	261 [10.3]	449 [17.7]
10-Way Seat	293 [11.5]	44 [1.7]	479 [18.9]	479 [18.9]	35 [1.4]	284 [11.2]	400 [15.7]	400 [15.7]	261 [10.3]	449 [17.7]
Seat Track Angle To Top Of Frame = 2.4°										

NOTE — [ ] DIMENSIONS ARE INCHES.

TRANSIT
AIRBAG OCCUPANT PROTECTION ZONES
TYPICAL

TRANSIT OCCUPANT PROTECTION ZONE

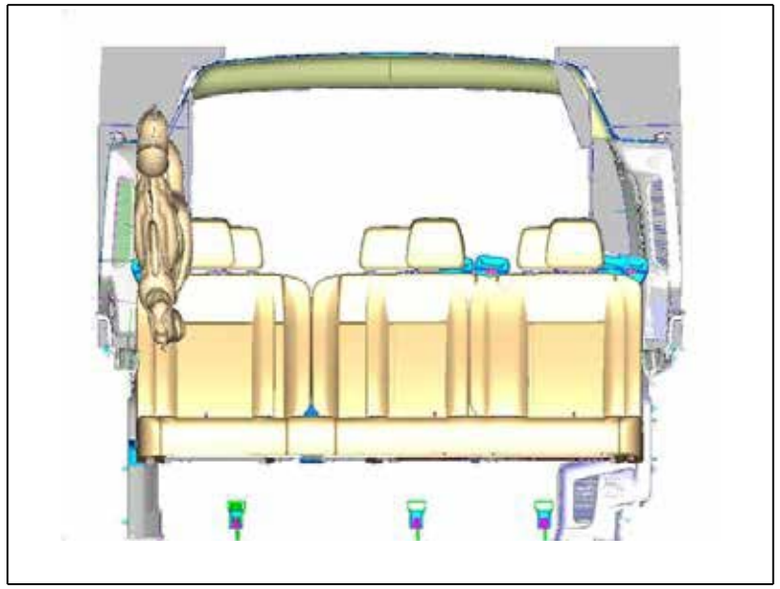

TRANSIT OCCUPANT PROTECTION ZONE

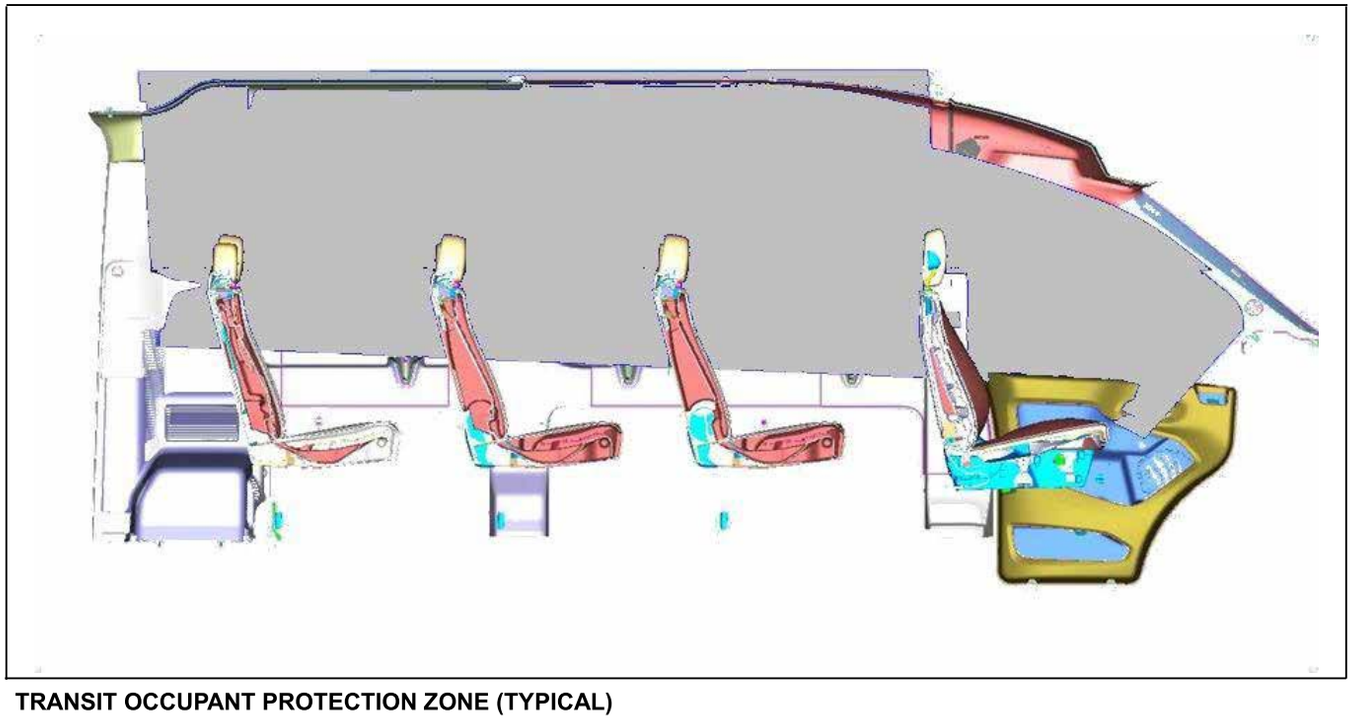

TRANSIT OCCUPANT PROTECTION ZONE (TYPICAL)

2020 Transit - Trailer Towing Wiring Harness

Specs > Electrical

Circuit Number	Circuit Descrip on	Color Code
CAT28C	Le stop/Turn indicator	Yellow
GD476	Ground	Black & White
CAT19D	Trailer brake control	Blue
CAT29C	Right stop/Turn indicator	Green
CAT23C	Ba ery charger	Grey & Yellow
CAT17E	Park/Running lights	Brown
CAT16C	Back up lights	Grey & Brown

7-PIN HARNESS

FUNCTION (WIRE COLOR CODES)

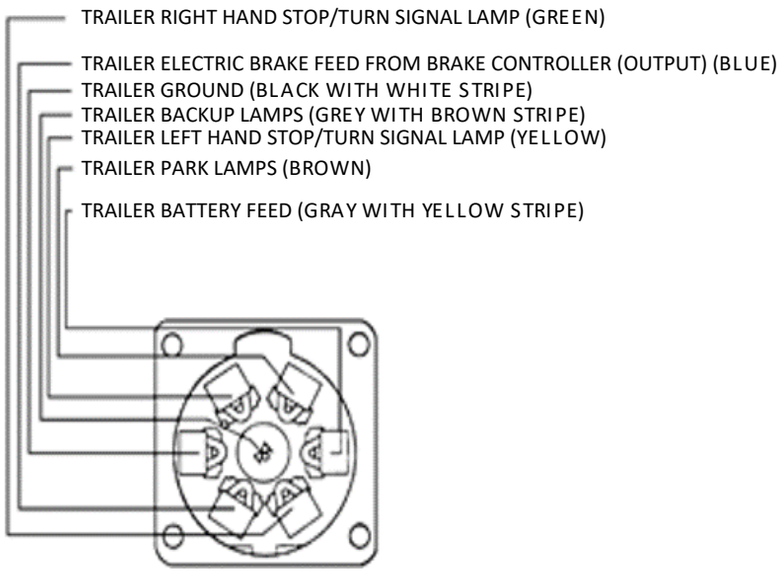

Stationary Elevated Idle Control (SEIC)

- A powertrain control module (PCM) strategy that provides elevated engine speed to drive auxiliary commercial equipment such as hydraulic pumps, generators, air compressors; or maintain vehicle battery charge under extreme electrical demands.
- SEIC is standard on Transit for use with FEAD mounted PTOs

Customer Access Wires for SEIC and VSO/CTO/PARK Signals

- Located in the engine compartment, see pictures below
- The final-stage manufacturer or up-fitter is required to supply the customer interface equipment.

SEIC Operation

- Intended to be commanded ONLY by applying battery voltage to certain customer-access blunt-cut wire circuits, and adding a target-speed resistor, and is only available when the vehicle road speed signal is zero.
- Includes a link circuit which changes from open-circuit to ground when enablers are met, that may be used to turn on an indicator lamp, while providing battery power to an aftermarket PTO clutch or solenoid.
- Ramp rates are fixed and cannot be altered by the customer.
- Minimum engine speed – ~ 800 RPM
- Maximum engine speed – 2400RPM

Typical SEIC engagement Sequence

Initiating SEIC by applying battery voltage to the SEIC-PTO wire immediately commands the PCM to first look for enabling conditions, such as vehicle gearshift selector in PARK, engine at base idle speed of about 650 rpm, etc. A complete list of enablers is provided in the "SEIC Enable/Disable Conditions" section of this bulletin. Once enablers are satisfied then the following takes place:

1. Command is sent to increase engine speed to 900 rpm standby.
2. The low-side driver circuit changes from open-circuit to ground.
3. Engine speed increases to the target RPM determined by resistor (see Resistor Chart).

Special Situations - Alternative Calibration

All new Ford vehicles have an "Alternative Calibration" or ALT-CAL installed in the PCM that conditions the powertrain during its early lifetime. It may increase the PARK-idle or drive-idle speed of the engine, by as small as 50 rpm or by several hundred. It affects SEIC initiation by not letting it activate, because one of the SEIC enablers is having a steady idle speed, generally near 650 rpm. If ALT-CAL sets the idle at 700 rpm then SEIC activation will be prevented. ALT-CAL is normally removed after 50 key-on starts, or by driving over 5 continuous miles; it is also sometimes erased by disconnecting the battery.

SEIC Circuit Locations

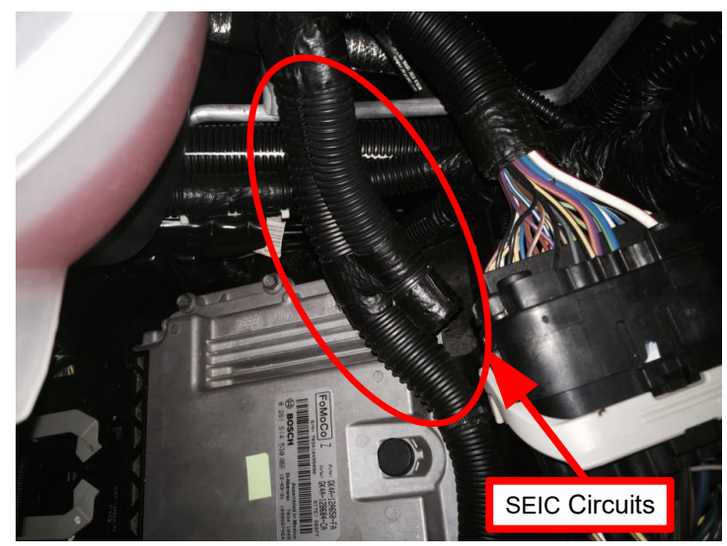

TRANSIT ENGINE COMPARTMENT

SEIC Circuit Location – found under hood, wrapped in convolute, taped to harness behind coolant reservoir

Special Situations - Battery Charge Protect

Battery charge protect mode is available on 3.5L Gas and 3.5L GTDI gas engine models. On these powertrains, Battery Charge protect mode is determined through resistor selection (see resistor chart). Note: PTO RPM REQ must have a voltage input between .16 and .20 for BCP to function. When it is switched on the engine speed goes immediately to 600. From this state, the PCM uses battery voltage as well as ambient air temp., engine oil temperature information to raise engine speed higher to maintain a certain battery charge. Maximum engine speed in BCP mode is 1200 rpm. Loss of an operating condition after BCP is engaged will require the BCP switch to be cycled before BCP will re-engage.

SEIC Enable/Disable Conditions

Vehicle Conditions to Enable SEIC (all are required)	Vehicle Conditions that Disable SEIC (any one required)	Gas Engine
Parking brake applied.	Parking brake disengaged.	Yes
Foot off of service brake	Depressing service brake	Yes (See Note-2)
Vehicle in PARK (automatic trans.)	Vehicle taken out of PARK	Yes
Foot off of accelerator pedal		Yes
Vehicle speed is 0 mph (stationary)		Yes
Engine at a stable base idle speed		Yes (See Note-1)
	Transmission Oil Temperature (TOT) Limit exceeds 240 degrees F.	Yes (See Note-2)
Engine Coolant Temperature (ECT) 40° F minimum	Engine Coolant Temperature Limit (ECT)	Yes (See Note-2)
	Catalyst Temperature Limit	Yes (See Note-2)

Note-1: If a SEIC disabling condition occurs, the engine must be allowed to reach stable base idle before the system can be re-initiated. This could take up to 15 seconds. If an attempt is made to reinitiate SEIC before the engine has reached a stable base idle SEIC will not engage. The operator will have to turn SEIC off and then back on once the vehicle has reached a stable base idle.

Note-2: A “change-of-state” at both the “PTO_REQUEST (PTO)” and "PTO_ENGAGE” circuits is required to re-invoke SEIC. When a disabler is seen by the PCM, the "PTO_OK (PTO_IND)" circuit changes from "ground-source" to “open-circuit". After approximately 3 seconds SEIC drops out, returning the engine speed to base idle. To re-initiate SEIC the operator must turn off voltage to both the “PTO_REQUEST (PTO)” and "PTO_ENGAGE" circuits and turn it back on again.

SEIC **Resistor Chart**

	3.5L Gas & 3.5L GTDI		**2.0L Diesel**	
Engine Target Speed (RPM)	Resistor (Ohms) (5%, 1/4 watt)	Voltage (volts)	Resistor (Ohms) (5%, 1/4 watt)	Voltage (volts)
700	34467	0.60	-	-
800	23434	0.84	-	-
900	17251	1.07	53800	0.4
1000	13295	1.31	31450	0.64
1100	10548	1.54	21410	0.9
1200	8528	1.78	15710	1.15
1300	6981	2.01	12050	1.4
1400	5758	2.25	9550	1.64
1500	5240	2.48	7640	1.9
1600	3947	2.664	6200	2.15
1700	3258	2.95	5060	2.4
1800	2671	3.19	4150	2.65
1900	2164	3.42	3400	2.89
2000	1723	3.66	2740	3.15
2100	1335	4.13	2200	3.4
2200	991	4.13	1724	3.65
2300	684	4.36	1319	3.9
2400	409	4.60	959	4.14
2500	-	-	628	4.4
BCP				
700-1200*	100k Ohm			

*RPM varies as a function of battery charge state- see BCP description

SEIC General System Behavior

If an SEIC enabling condition is not met upon SEIC initialization:

- SEIC will not initiate. SEIC will require a "change-of-state" (voltage to both the “PTO_REQUEST” and "PTO_ENGAGE" circuits removed completely.) The enabling conditions must be met, and then SEIC and PTO operation may then be reinitiated.

If an SEIC disabler occurs:

- The "PTO_OK (PTO_IND)" circuit changes from "ground-source" to “open-circuit". After approximately 3 seconds SEIC drops out, returning the engine speed to base idle. SEIC will require a "change-of-state” (voltage to both the “PTO_REQUEST (PTO)” and "PTO_ENGAGE" circuits removed completely). The enabling conditions must be met, and then SEIC and PTO operation may then be reinitiated.

SEIC/PTO strategy function in the PCM is not affected by the loss of vehicle battery electrical power. SEIC

Ramp Rate (fixed, not programmable):

- 400 rpm/second.

Correlation between engine speed and resistor values:

- The external voltage source that the aftermarket PTO system designer uses to command SEIC through the "PTO" or "PTO-REQUEST" circuits must be the same as that used by the PCM internally for predictable SEIC function. Reasoning is that a fully-charged vehicle battery fluctuates with ambient temperature.
- If there is a high electrical demand on the chassis battery, such as from aftermarket inverters or generators, etc., the actual elevated idle engine speed may vary with that demand for any given resistance in the SEIC circuit.
- Normal base engine calibration allows approximately +/-50 rpm fluctuation. If any factory vehicle accessories are used during SEIC, e.g. a/c, defroster, etc., then that fluctuation may increase to approximately +/-100 rpm or more.
- The sudden loss of aftermarket PTO hydraulic pressure during SEIC/PTO operation, like a ruptured hose, may send SEIC engine speed to near 3000 rpm. It is recommended that a hydraulic pressure switch linked to SEIC/PTO be added to disable SEIC/PTO when a hose ruptures.
- Because of a service brake circuit characteristic at engine-start, invoking SEIC may cause the diagnostic error code FFG_BOO to get flagged (recorded in the PCM). To avoid this, simply tap the service brake pedal sometime after engine-start and prior to invoking SEIC. Once the code is set, SEIC may not be available until it is erased.
- Gas engines require a "change-of-state" at the PTO-REQUEST (PTO) and PTO-ENGAGE circuits whenever a disabler turns off SEIC (remove battery voltage signal and re-apply).
- For aftermarket remote engine start-stop: a change-of-state is required to get SEIC to function again.

TRANSIT
SEIC / PTO Schematics

3.5L Gas & 3.5L GTDI Engines

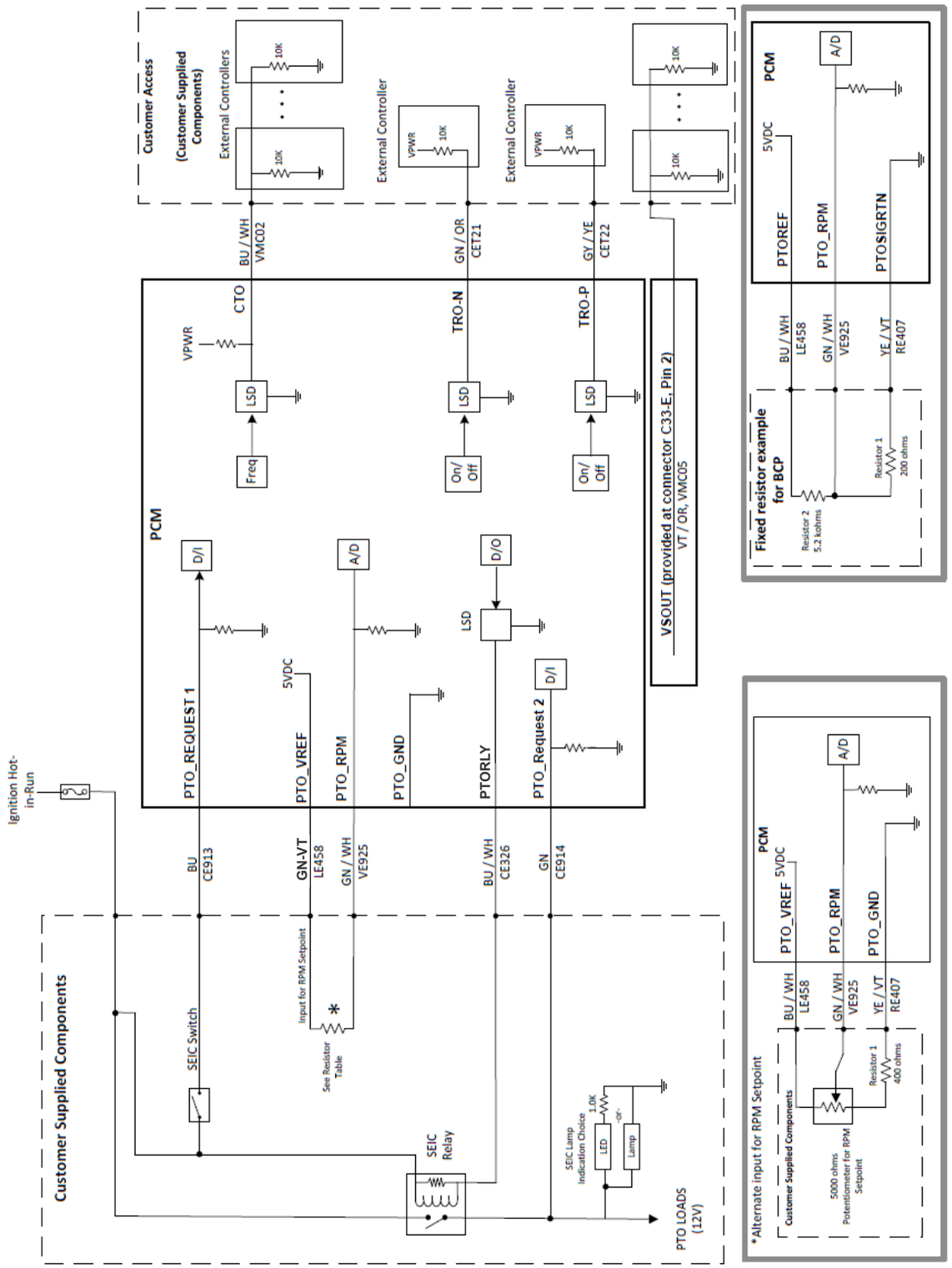

2.0L Diesel Engine

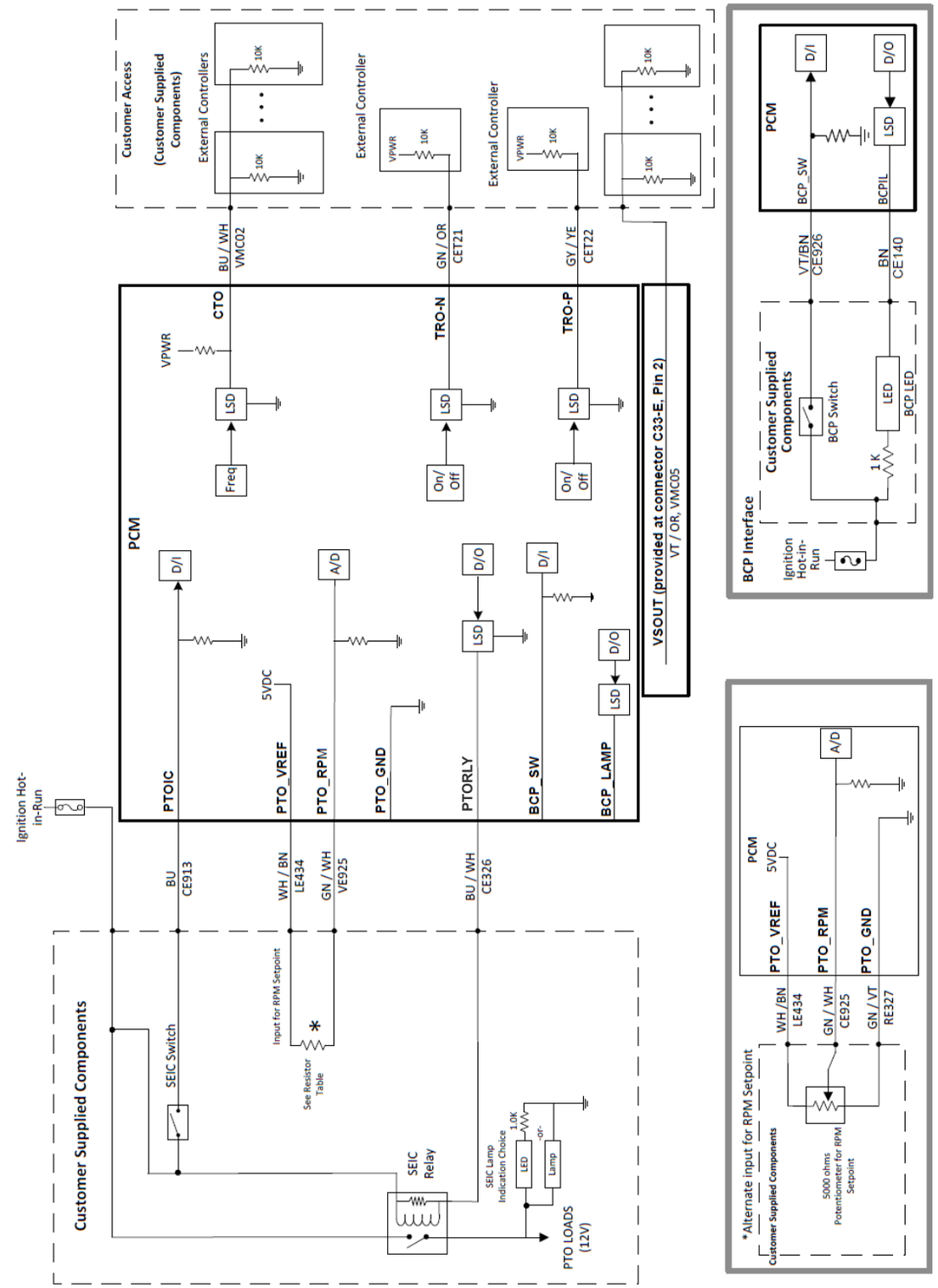

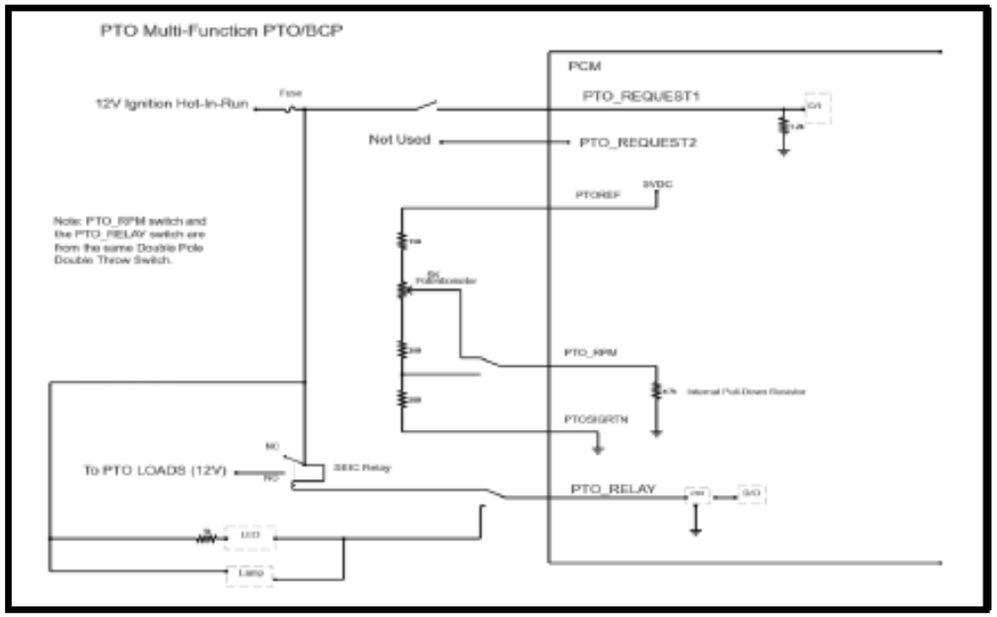

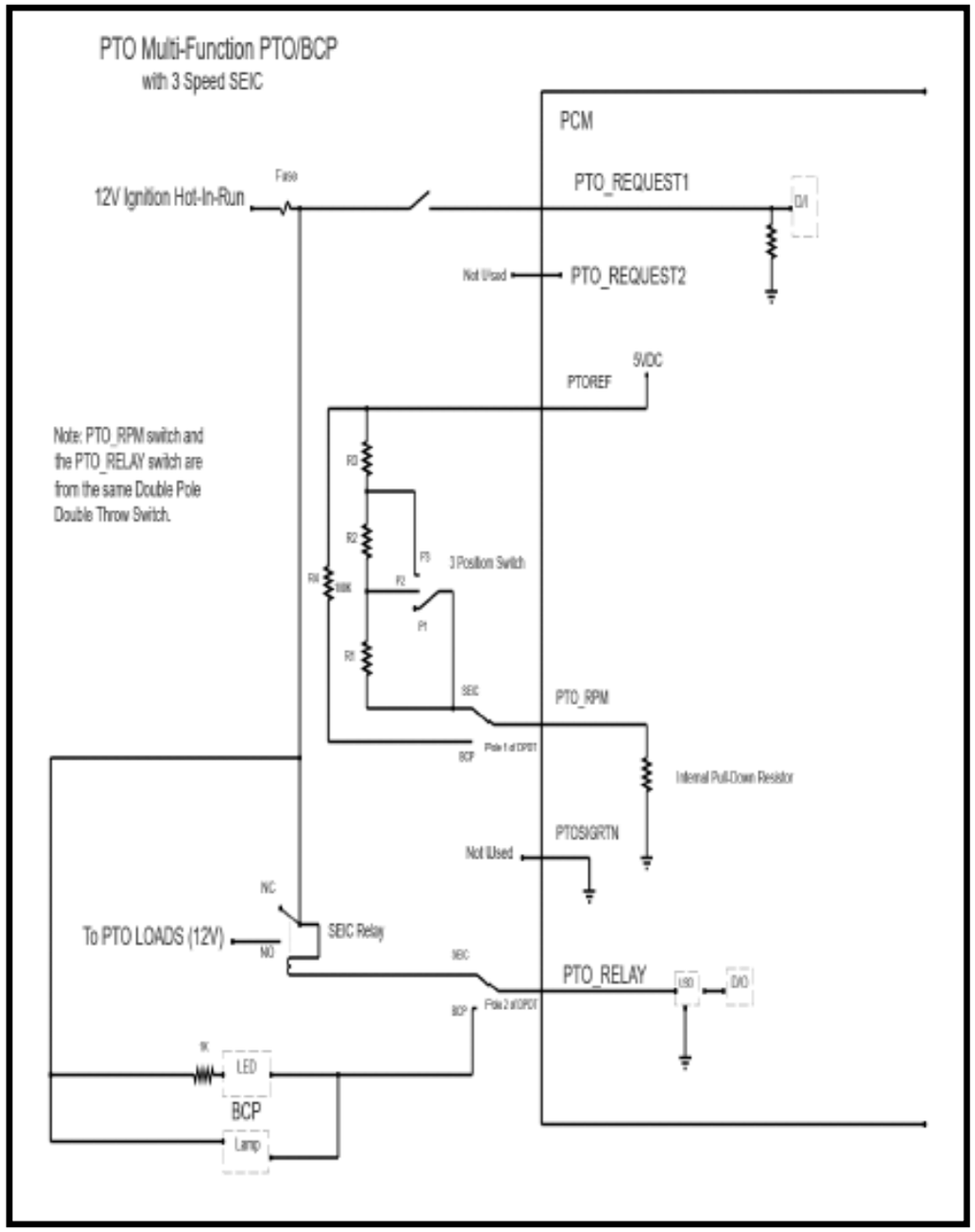

Customer Access Signal Circuit Descriptions

Refer to the Body Equipment Mounting Manual for more information.

Circuit Intent	Wire Tag	Description
OUTPUT Park-Only	TRO-P	3.5L - PCM Pin C1551B-40 Circuit No. CET22 Wire Color: Gray / Yellow 3.7L - PCM Pin C175B-19 Circuit No. CET22 Wire Color: Gray / Yellow
OUTPUT Neutral-Only	TRO-N	3.5L - PCM Pin C1551B-81 Circuit No. CET21 Wire Color: Green / Orange 3.7L - PCM Pin C175B-43 Circuit No. CET21 Wire Color: Green / Orange
OUTPUT Vehicle Speed	VSOUT	Circuit No. VMC05 Connector: C33-E Pin:4 See BEMM for signal specification.
OUTPUT Engine Speed	CTO	3.5L - PCM Pin C1551B-40 Circuit No. VMC02 Wire Color: Blue / White 3.7L - PCM Pin C175B-19 Circuit No. VMC02 Wire Color: Blue / White 2.0L Diesel - PCM Pin C1232B Circuit No. VMC02 Wire Color: Blue / Orange
PASS-THRU		Circuit No. CAC17 • Found: at: - Vehicle interface connector C11-H (4-pin connector), Pin #2, at firewall on driver side of the engine compartment - Vehicle interface connector C12-A (6-pin connector), Pin #1, behind left side of center stack. - Requires modified vehicle wiring option (53K)
PASS-THRU		Circuit No. CAC18 • Found at: - Vehicle interface connector C11-H (4-pin connector), Pin #3, at firewall on driver side of the engine compartment - Vehicle interface connector C12-A (6-pin connector), Pin #2, behind left side of center stack. - Requires modified vehicle wiring option (53K)

TRANSIT
SEIC / PTO CIRCUIT DESCRIPTIONS Cont

SEIC Circuit Descriptions

All circuits lead back to pins on the PCM

Circuit Intent	Wire Tag	Description
INPUT (VPWR)	PTO_REQUEST1 (Gas Engines) PTO_NO (Diesel Engine)	3.5L GTDI- PCM Pin C1551B-87 Circuit No. CE913 Wire Color: Blue 3.5L Gas - PCM Pin C175B-84 Circuit No. CE913 Wire Color: Blue 2.0L Diesel- PCM Pin C1232B-33 Circuit No. CE913 Wire Color: Blue • Applying vehicle battery voltage to this wire begins SEIC process. • Signals PCM to enter SEIC strategy. • Verifies safety enablers. • Elevates engine speed to target found at PTO-RPM circuit. • Invokes the PTOIL circuit when safety enablers are met. • Looks for the target engine speed requested at the PTO_RPM circuit using a resistor or POT.
INPUT (VPWR)	PTO_REQUEST2	3.5L GTDI - PCM Pin C1551B-91 Circuit No. VE935 Wire Color: Green 3.7L Gas - PCM Pin C175B-88 Circuit No. VE935 Wire Color: Green • RPM Increase Command Monitor
OUTPUT	PTORLY	3.5L GTDI - PCM Pin C1551B-80 Circuit No. CE326 Wire Color: Green/Violet 3.5L Gas - PCM Pin C175B-96 Circuit No. CE326 Wire Color: Green/Violet 2.0L Diesel PCM Pin C1232T-1 Circuit No. CE326 Wire Color: Blue / White • A low-side driver, changing from "open-circuit" to "ground" indicating that the engine is ready for the PTO operation to begin and that a PTO load may be applied. • Intended for powering a PTO indicator lamp, or turn on a relay coil (not to exceed 1 amp). LED lights require adding a resistor in series.
INPUT (resistor)	PTO_RPM	3.5L GTDI - PCM Pin C1551B-33 Circuit No. CE925 Wire Color: Green / White 3.5L Gas - PCM Pin C175B-85 Circuit No. CE925 Wire Color: Green / White 2.0L Diesel - PCM Pin C1232B-43 Circuit No. CE925 Wire Color: Green / White • Add a resistor or a potentiometer to obtain fixed or variable engine target speed. • Combine in circuit with PTO_VREF (+5V). • Speed range available: 910 rpm to 2400 rpm
OUTPUT	PTO_VREF	3.5L GTDI - PCM Pin C1551B-11 Circuit No. LE458 Wire Color: Blue / White 3.5L Gas - PCM Pin C175B-52 Circuit No. LE458 Wire Color: Blue / White • A 5-volt reference, buffered against shorts to ground or power, used to complete the resistor circuit for engine speed selection.
INPUT	PTO_GND	3.5L GTDI - PCM Pin C1551B-18 Circuit No. RE407 Wire Color: Yellow / Violet 3.5L Gas - PCM Pin C175B-51 Circuit No. RE407 Wire Color: Yellow / Violet • A ground reference, buffered, used to complete the resistor circuit for engine speed selection when a potentiometer is used.
INPUT	BCP_SW	2.0L Diesel - PCM Pin C1232T-43 Circuit No. CE926 Wire Color: Violet / Brown • Applying vehicle battery voltage to this wire begins BCP. • BCP regulates engine speed between 600 to1200 rpm to maintain required charge system voltage
OUTPUT	BCP_LAMP	2.0L Diesel - PCM Pin C1232T-42 Circuit No. CE140 Wire Color: Brown • A low-side driver, changing from "open-circuit" to "ground" indicating that BCP is in effect. • Intended for powering an indicator lamp.

Battery Voltage Sources (VPWR)

Refer to the Body Equipment Mounting Manual for more information.

Circuit Intent	Wire Tag	Description
Hot-at-all-times		Circuit no. SB153 • A fused 40 amp circuit (F53). • Requires modified vehicle wiring option (53K) • Found at: - Vehicle interface connector C11-H (4-pin connector), Pin #4, at firewall on driver side of the engine compartment - Vehicle interface connector C12-A (6-pin connector), Pin #3, behind left side of center stack. - Vehicle interface connector C33-C (6-pin connector), Pin #3, behind Passenger side airbag, above glove box. Circuit no. SB118 Connector: C33-C Pin:6 • A fused 40 amp circuit (F18). • Found: at vehicle interface connector C33-C (6-pin connector), Pin #6, behind Passenger side airbag, above glove box. • Requires modified vehicle wiring option (53K) Customer Connection Point • A fused 60 amp VBATT feed. • Found: at right side rear of driver seat pedestal.
Ignition Hot-in-RUN		Circuit no. CB121 Connector: C33-E Pin:6 • A fused 10 amp circuit. • Found: at vehicle interface connector C33-E (6-pin connector) on right side of driver seat pedestal beneath driver seat. Circuit no. CAC14 • A fused 40 amp circuit (F52). • Requires modified vehicle wiring option (53K) • Found at: - Vehicle interface connector C11-H (4-pin connector), Pin #1, at firewall on driver side of the engine compartment - Vehicle interface connector C12-A (6-pin connector), Pin #4, behind left side of center stack - Vehicle interface connector C33-C (6-pin connector), Pin #5, behind Passenger side airbag, above glove box.
Upfitter switch Output: Ign-Hot/ACC Found at vehicle interface connector C33-H (4-pin connector) on right side of driver seat pedestal beneath driver seat. •Requires Upfitter Switch Option 67C	Aux-1	[20-amp] Circuit No. CAC05 Connector: C33-H Pin:1
	Aux-2	[20-amp] Circuit No. CAC06 Connector: C33-H Pin:2
	Aux-3	[20-amp] Circuit No. CAC07 Connector: C33-H Pin:3
	Aux-4	[20-amp] Circuit No. CAC08 Connector: C33-H Pin:4

CHANGE CONTROL INDEX

LTRS	REVISIONS		
ORIGINATOR	CHECKER	ENGR APP	MATL APP
			INITIAL RELEASE CHLC14-000000-BBLB-AA-01-FNA-ECN/1 RELEASED 20190918
KVINOTH4	RWAGNE43	SLAZARZ	--
			REVISED: SHEET 19,20,30 CHLC14-000000-BBLB-AA-01-FNA-ECN/3 PUBLISHED 20200131
KVINOTH4	RWAGNE43	SLAZARZ	--
			REVISED: SHEET 01,02,24,29,30 CHLC14-000000-BBLB-AA-01-FNA-ECN/5 PUBLISHED 20200207
KVINOTH4	RWAGNE43	SLAZARZ	--
			ADDED: SHEET 36,37,38,39,40,41 CHLC14-000000-BBLB-AA-01-FNA-ECN/6 PUBLISHED 20200512
KVINOTH4	RWAGNE43	SLAZARZ	--