2003

Ford TRUCKS

BODY BUILDERS LAYOUT BOOK

2003

Published 9/02

INDEX

2003 MODEL YEAR

INTRODUCTION

Page Number

Index 1-3
Model Lineup
- Ranger 4
- E-Series/E-Series Super Duty 5-6
- F-150 7-8
- Super Duty F-Series 250-550 9-12
- F-Super Duty Motor Home Chassis - Class A 13

Vin Numbers Identification Information 14-20
Metric/U.S Customary Unit Equivalents 21

SAFETY/EMISSION

Page Number

Definitions of Terms 22-23
Guidelines for Installation of Alternative Fuel Systems on Gasoline Vehicles 24-26
Guidelines for Second Unit Body Installation on Ford Produced Dedicated Natural Gas Vehicle (NGV) E-Series Super Duty Cutaway/Chassis Cab 27-28
Seat Track Travel/H-Point Locations
- Ranger 29
- E-Series/E-Series Super Duty 30
- F-150 31-32
- Super Duty F-Series 33

Occupant Protection Systems
- Seat Restraint System 34-39
- Airbag Supplemental Restraint System 40-42

Vehicle Noise Regulations 43-44
Emission Control Modifications 45-48
Fuel System Evaporative Emissions 49-51
U.S. and Canada Safety Standards
- Completed/Altered Vehicles 52-55
- F/CMVSS 105 and 135 Hydraulic Brake Compliance Guidelines for Altered E-Series and Ranger Vehicles 56-60
- F/CMVSS 105 Hydraulic Brake Compliance Guidelines for Altered Super Duty F-Series Vehicles 61-63
- Incomplete Vehicles 64-67

TRUCK DATA

Page Number

Ranger
- Dimensional Data
  - Regular Cab Styleside 4x2/4x4 68-69
  - SuperCab Styleside 4x2/4x4 70-71
  - Regular/SuperCab Flareside 4x2/4x4 72-73
- Axle/Tire/Vehicle Height Data 74
- Tire Data 75
- X and Z Datum Line Locations 76
- Fuel and Vapor System 77

Windstar
- Dimensional Data
  - 7 Passenger Wagon 78-79
  - Cargo Van 80-81
  - Wagon/Van 82-83

E-Series/E-Series Super Duty
- Dimensional Data
  - E-150/350 Super Duty Wagon 8/12 Passenger 84-85
  - E-350 Super Duty Extended Wagon 12/15-Passenger 86-87
  - E-150/350 Super Duty Wagon 7-Passenger (Quad Captain's Chairs/3-Passenger Bench) 88-89
  - E-150/250/350 Super Duty Van 90-91
  - E-150/250/350 Super Duty Crew Van 92-93
  - Van/Wagon Axle/Tire/Vehicle Height Data 94
  - Incomplete E-150/250/350 Super Duty Van with Recreational Trim 95

E-350/450 Super Duty Cutaway/Chassis Cab
- 138" Wheelbase (SRW/DRW) 96-97
- 158" Wheelbase (DRW) 98-99
- 176" Wheelbase (DRW) 100-101

INDEX

TRUCK DATA (Continued)

Page Number

E-Series/E-Series Super Duty (Continued)
E-550 Super Duty Cutaway/Chassis Cab
159.5" - 233.5" Wheelbase (DRW) 102
Dimensional Frame Data
159.5" Wheelbase Frame & Body Pucks 103
177.5" Wheelbase Frame 104
209.5" Wheelbase Frame 105
E-350/450/550 Body Section 106
E-350/450/550 Dimensional Data 107
E-250 Super Duty Stripped Chassis 124" Wheelbase (SRW) 108
E-350 Super Duty Stripped Chassis 138" Wheelbase (SRW/DRW) 109
E-350/450 Super Duty Stripped Chassis
158" Wheelbase (DRW) 110
176" Wheelbase (DRW) 111
Parking Brake Cable Attachment 112
E-350/450 Super Duty Cutaway/Chassis Cab/Stripped Chassis
All Wheelbase (SRW/DRW) 113
E-550 Super Duty Cutaway/Chassis Cab
All Wheelbase (DRW) 114
Vehicle Height Data Super Duty Cutaway/Chassis Cab/Stripped Chassis 115-116
Tire/Ground Clearance Data Super Duty Cutaway/Chassis Cab/Stripped Chassis 117-118
Cutaway/Chassis Cab/Stripped Chassis Fuel Filler Systems 119
E-350/450 Super Duty Cutaway/Stripped Chassis
37/55-Gallon Aft-of-Axle Fuel Tank 120
E-550 Super Duty Cutaway/Chassis Cab
55-Gallon Aft-of-Axle Fuel Tank 121
Trailer Tow/Lamp Plug and Wiring 122-125

TRUCK DATA (Continued)

Page Number

F-150 — 4x2/4x4
Dimensional Data
Regular Cab Styleside 126-127
SuperCab Styleside 128-129
Regular Cab Flareside 130-131
SuperCab Flareside 132-133
4-Door SuperCrew Pickup 134-135
4-Door SuperCrew Pickup Box Dimensions/Features 136
Styleside Pickup Box Dimensions/Features 137
Flareside Pickup Box Dimensions/Features 138
X and Z Datum Line Locations 139
Fuel and Vapor System Typical All Lengths F-150 140
Axle/Tire/Vehicle Height Data - Regular/SuperCab 141
Axle/Tire/Vehicle Height Data - SuperCrew 142
Tire Data 143
Super Duty F-250/350 Styleside Pickup — 4x2/4x4
Dimensional Data
Regular 144-145
SuperCab 146-147
Crew Cab 148-149
Pickup Box Dimensions/Features 150-151
Axle/Tire/Vehicle Height Data
Regular 152-153
SuperCab 154-155
Crew Cab 156-157

TRUCK DATA (Continued)

Page Number

Super Duty F-350/450/550 — Chassis Cab — 4x2/4x4
- Dimensional Data
  - Regular 158-159
  - SuperCab 160-161
  - Crew Cab 162-163
- Axle/Tire/Vehicle Height Data
  - Regular 164-165
  - SuperCab 166-167
  - Crew Cab 168-169
- Ground Clearance Data 170-172
- Frame Data Super Duty F-250/350 Styleside Pickup — Wide Frame 173
- Pickup/Box Delete Exhaust/Fuel Systems — Wide Frame 174
- Fuel Filler Pipe Location and Dimension
  - Pickup Box Delete — Wide Frame 175
  - Chassis Cab 176
- Frame Data - Chassis Cab - Narrow Frame 177-178
- Chassis Cab Exhaust/Fuel System 179

F-Super Duty Class A Motor Home Chassis (F53)
- Chassis Dimensions 180
- Fuel Filler Pipe Installation 181
- Frame Crossmember (CM) Locations 182
- Front Structure 183
- Axle/Tire/Vehicle Height Data 184
- Body and Special Equipment Installation Precautions 185-189

APPENDIX

Page Number

Snowplow Installation
- F-150 190
- Super Duty F-Series 191
- Tractor Fifth Wheel Mounting Procedure 192
- PTO Installation 193-194
- M60D Manual Transmission/4R100 and TorqueShift 195
- Auxiliary Idle Control — Diesel Only 196-198

Electrical Wiring
- PTO Circuit Installation 199
- Customer Access Circuits 200-202
- Super Duty F-Series Trailer Tow/Second Unit Body Wiring Tap Schematic 203
- General Practices 204-205
- Powertrain Control System Application 206
- Adding Lights or Electrical Devices 207-208

Design Recommendations
- Pickup Box Removal/Alterations 209-217
- Second Unit Body Mounting 218-226
- Fuel System 227-229
- Cooling/Climate Control Systems 230
- Exhaust System/Ford Body Components 231
- Wheels/Tires/Suspension/Steering/Engine 232
- Driveline/Transmission/Frame/Jack 233

Ambulance Builder Guidelines 234

New Vehicle Storage Guidelines 235

RANGER MODEL LINEUP

2003
MODEL YEAR

RANGER MODEL	BODY CODE	WHEELBASE inches	CA inches	STANDARD ENGINE(1) liters	STANDARD TRANSMISSION(1)	MAXIMUM GVWR pounds	TRANSFER CASE	MAXIMUM PAYLOAD(2) pounds	BASE CURB WEIGHT(3)			PICKUP NOMINAL LENGTH feet
									FRONT pounds	REAR pounds	TOTAL pounds	
REGULAR CAB PICKUP												
4x2 SWB	R10	112	37.6	2.3L I-4	5-Spd. Manual OD	4700	—	1260	1742	1260	3002	6
						4680		1640				
4x2 LWB	R10	118	43.5	3.0L V-6	5-Spd. Manual OD	4360	—	1260	1752	1316	3068	7
						4700		1600				
4x4 SWB	R11	112	37.6	3.0L V-6	5-Spd. Manual OD	4740	BW1354	1260	2064	1379	3443	6
						5020		1540				
4x4 SWB	R11	118	43.6	3.0L V-6	5-Spd. Manual OD	4800	BW1354	1260	2085	1424	3509	7
						5040		1500				
SUPERCAB STYLESIDE PICKUP												
4x2 LWB	R14	126	37.7	2.3L I-4	5-Spd. Manual OD	4740	—	1260	1825	1378	3203	6
	R44				5-Spd. Automatic OD	5020		1660				
4x4 LWB	R15	126	37.8	4.0L V-6	5-Spd. Manual OD	5120	BW1354	1260	2226	1481	3707	6
	R45					5300		1560				

(1) Engine/transmission combinations may not be available on all models, or in all areas.
(2) Includes weight of driver, passengers and optional equipment.
(3) Base curb weight is for standard equipment only.

E-SERIES VAN MODEL LINEUP

2003
MODEL YEAR

E-SERIES MODEL	BODY CODE	WHEELBASE inches	CA inches	STANDARD ENGINE[1] liters	STANDARD TRANSMISSION	MAXIMUM GVWR pounds	PASSENGER CAPACITY	BASE CURB WEIGHT[2] FRONT pounds	REAR pounds	TOTAL pounds
REGULAR/SUPER WAGON										
E-150 Wagon	E11	138	—	4.2L V-6	4-Spd. Auto OD (4R70W)	7000	7	2836	2328	5164
							8	2777	2228	5005
E-350 Super Duty Wagon	E31	138	—	5.4L V-8	4-Spd. Auto OD (4R70W)	8600	7	3236	2641	5877
							8	3220	2573	5793
				5.4L V-8 NGV	4-Spd. Auto OD (4R100)	8700		3167	3180	6347
				5.4L V-8	4-Spd. Auto OD (4R70W)	8600	12	3203	2687	5890
				5.4L V-8 NGV	4-Spd. Auto OD (4R100)	8700		3172	3303	6475
E-350 Super Duty Extended Wagon	S31	138	—	5.4L V-8	4-Spd. Auto OD (4R70W)	9300	12	2939	3121	6060
				5.4L V-8 NGV	4-Spd. Auto OD (4R100)			2907	3738	6645
				5.4L V-8		9100	15	2955	3273	6228
				6.8L V-10		9300		3039	3219	6258
				7.3L V-8		9400		3446	3254	6700
				5.4L V-8 NGV		9100		2924	3736	6660

E-SERIES MODEL	BODY CODE	WHEELBASE inches	CA inches	STANDARD ENGINE[1] liters	STANDARD TRANSMISSION[1]	MAXIMUM GVWR pounds	MAXIMUM PAYLOAD[3] pounds	BASE CURB WEIGHT[2] FRONT pounds	REAR pounds	TOTAL pounds
REGULAR/EXTENDED WAGON										
E-150 Van	E14	138	—	4.2L V-6/4.6L V-6[4]	4-Spd. Auto. OD (4R70W)	6700/7000[4]	1905/1835[4]	2713/2930[4]	2080/2231[4]	4793/5161[4]
				4.2L V-6		6700[5]	1695[5]	2891[5]	2110[5]	5001[5]
E-250 Van	E24	138	—	4.2L V-6/4.6L V-8[4]	4-Spd. Auto. OD (4R70W)	8600/7900[4]	3430/2610[4]	2868/2927[4]	2343/2359[4]	5211/5286[4]
				4.2L V-6		8600[5]	3215[5]	2991[5]	2391[5]	5382[5]
				5.4L V-8 NGV	4-Spd. Auto OD (4R100)	8600	2735	2884	2978	5862
E-250 Extended Van	S24	138	—	4.2L V-6/4.6L V-8[4]	4-Spd. Auto. OD (4R70W)	8600/7500[4]	3215/1965[4]	2765/2877[4]	2579/2658[4]	5344/5535[4]
				4.2L V-6		8600[5]	3215[5]	2991[5]	2391[5]	5382[5]
E-350 Super Duty Van	E34	138	—	5.4L V-8	4-Spd. Auto. OD (4R100)	9500	4015	3029	2454	5483
				5.4L V-8		9500[5]	3800[5]	3198[5]	2501[5]	5699[5]
				5.4L V-8 NGV		9500	3430	2998	3070	6068
E-350 Super Duty Extended Van	S34	138	—	5.4L V-8	4-Spd. Auto. OD (4R100)	9400	3765	2936	2696	5632
				5.4L V-8		9400[5]	3400[5]	3105[5]	2744[5]	5849[5]
				5.4L V-8 NGV		9300	3080	2905	3312	6217

(1) Engine/transmission combinations may not be available on all models, or in all areas.
(2) Base curb weight is for standard equipment only.
(3) Includes weight of driver, passengers and optional equipment.
(4) RV Conversion
(5) Crew Van

E-SERIES SUPER DUTY CUTAWAY/CHASSIS CAB/STRIPPED CHASSIS MODEL LINEUP

2003
MODEL YEAR
Rev 10-17-02

E-SERIES MODEL	BODY CODE	WHEELBASE inches	CA inches	STANDARD ENGINE[1] liters	STANDARD TRANSMISSION	MAXIMUM GVWR pounds	MAXIMUM PAYLOAD[3] pounds	BASE CURB WEIGHT[2] FRONT pounds	BASE CURB WEIGHT[2] REAR pounds	BASE CURB WEIGHT[2] TOTAL pounds
COMMERCIAL/RV CUTAWAY										
E-350 Super Duty Cutaway	E35	138	80	5.4L V-8	4-Spd. Auto OD (4R100)	9600 SRW	4820	2880	1899	4779
				5.4L V-8 7.3L V-8[6]		10,700/11,500[6] DRW	5790/TBD[6]	2894/TBD[6]	2014/TBD[6]	4908/TBD[6]
		158	100	5.4L V-8		11,500	6445	2972	2081	5053
		176	118	5.4L V-8		11,500	6500	3009	1989	4977
E-450 Super Duty Cutaway	E45	158	100	6.8L V-10	4-Spd. Auto OD (4R100)	14,050/14,000[7]	8450/7940[7]	3070/3471[7]	2520/2587[7]	5590/6058[7]
				5.4L V-8 NGV		14,050	8105	2984	2961	5945
		176	118	6.8L V-10		14,050/14,000[7]	8436/7915[7]	3142/3543[7]	2472/2539[7]	5614/6082[7]
				5.4L V-8 NGV		14,050	8005	3024	3021	6045
E-550 Super Duty Cutaway	E55	159.5	100.1	6.8L V-10	4-Spd. Auto OD (4R100)	17,500	11,310	3405	2785	6190
				7.3L V-8		19,000	12,810	3405	2785	6190
		177.5	118.1	6.8L V-10		17,500	11,180	3475	2844	6319
				7.3L V-8		19,000	12,680	3475	2844	6319
		191.5	132.1	6.8L V-10		17,500	11,065	3537	2894	6431
				7.3L V-8		19,000	12,565	3537	2894	6431
		209.5	150.1	6.8L V-10		17,500	10.920	3617	2959	6576
				7.3L V-8		19,000	12,420	3617	2959	6576
		233.5	174.1	6.8L V-10		17,500	10,730	3722	3046	6768
				7.3L V-8		19,000	12,230	3722	3046	6768
CHASSIS CAB										
E-350 Super Duty Chassis Cab	C35	138	69.3	5.4L V-8	4-Spd. Auto OD (4R100)	10,700 DRW	5715	2925	2059	4984
		158	89.3	5.4L V-8		11,500 DRW	6445	2972	2081	5053
		176	107.3	5.4L V-8		11,500 DRW	6425	3048	2025	5073
E-450 Super Duty Chassis Cab	C45	158	89.3	6.8L V-10	4-Spd. Auto OD (4R100)	14,050/14000[7]	8380/7865[7]	3106/3507[7]	2560/2627[7]	5666/6134[7]
				5.4L V-8 NGV		14,050	8025	3024	2997	6021
		176	107.3	6.8L V-10		14,050/14000[7]	8360/7840[7]	3182/3583[7]	2622/2575[7]	5690/6158[7]
				5.4L V-8 NGV		14,050	8005	3024	3021	6045
E-550 Super Duty Chassis Cab	C55	159.5	89.4	6.8L V-10	4-Spd. Auto OD (4R100)	17,500	11,210	3455	2835	6290
				7.3L V-8		19,000	12,710	3455	2835	6290
		177.5	107.4	6.8L V-10		17,500	11,080	3525	2894	6419
				7.3L V-8		19,000	12,580	3525	2894	6419
		191.5	121.4	6.8L V-10		17,500	10,965	3587	2944	6531
				7.3L V-8		19,000	12,465	3587	2944	6531
		209.5	139.4	6.8L V-10		17,500	10,820	3667	3009	6676
				7.3L V-8		19,000	12,320	3667	3009	6676
		233.5	163.4	6.8L V-10		17,500	10,630	3772	3096	6868
				7.3L V-8		19,000	12.130	3772	3096	6868
COMMERCIAL STRIPPED CHASSIS										
E-250 Super Duty Commercial Stripped Chassis	E29	124	—	4.2L V-6	4-Spd. Auto OD (4R70W)	8600 SRW	5130	2070	1399	3469
E-350 Super Duty Commercial Stripped Chassis	E39	138	—	5.4L V-8	4-Spd. Auto OD (4R100)	9600 SRW	5620	2160	1816	3976
						10,000 DRW	5935	2240	1824	4064
		158				9600 SRW	5535	2269	1795	4064
						11,000 DRW	6680	2281	2035	4316
		176				11,000 DRW	6645	2278	2074	4352
E-450 Super Duty Commercial Stripped Chassis	E49	158	—	5.4L V-8	4-Spd. Auto OD (4R100)	14,050 DRW	9485	2260	2304	4564
		176	—			14,050 DRW	9490	2318	2241	4559

(1) Engine/transmission combinations may not be available on all models, or in all areas.
(2) Base curb weight is for standard equipment only.
(3) Includes weight of driver, passengers and optional equipment.
(4) RV Conversion.
(5) Crew van only.
(6) School Bus only.
(7) California only.

F-150 MODEL LINEUP

2003
MODEL YEAR

F-SERIES MODEL	BODY CODE	WHEELBASE inches	ENGINE(1) liters	TRANSMISSION(1)	MIN-MAX GVWR pounds	TRANSFER CASE	MAXIMUM PAYLOAD(2) pounds	BASE CURB WEIGHT(3)			PICKUP BOX NOMINAL LENGTH feet
								FRONT pounds	REAR pounds	TOTAL pounds	
REGULAR CAB FLARESIDE PICKUP											
F-150 4x2	F07	119.9	4.2L V-6	5-Spd. Manual OD	6050	—	2045	2288	1756	4044	6½
F-150 4x2	F07	119.9	4.6L V-8	5-Spd. Manual OD	6050	—	1995	2359	1734	4093	6½
F-150 4x2	F07	119.9	5.4L V-8	4-Spd. Auto OD	6050	—	1820	2434	1793	4227	6½
F-150 4x4	F08	120.2	4.2L V-6	5-Spd. Manual OD	6050	Warner 44-06	1690	2523	1834	4357	6½
F-150 4x4	F08	120.2	4.6L V-8	5-Spd. Manual OD	6250	Warner 44-06	1805	2609	1834	4443	6½
F-150 4x4	F08	120.2	5.4L V-8	4-Spd. Auto OD	6300	Warner 44-06	1720	2682	1894	4576	6½
REGULAR CAB STYLESIDE PICKUP											
F-150 4x2	F17	119.9	4.2L V-6	5-Spd. Manual OD	6050	—	2015	2281	1751	4032	6½
F-150 4x2	F17	119.9	4.6L V-8	5-Spd. Manual OD	6050	—	1965	2352	1729	4081	6½
F-150 4x2	F17	119.9	5.4L V-8	4-Spd. Auto OD	6050	—	1835	2427	1788	4215	6½
F-150 4x2	F17	138.5	4.2L V-6	5-Spd. Manual OD	6050	—	1940	2350	1756	4106	8
F-150 4x2	F17	138.5	4.6L V-8	5-Spd. Manual OD(4)	6050/6600	—	1855/2325	2434	1758	4192	8
F-150 4x2	F17	138.5	5.4L V-8	4-Spd. Auto OD	6050/6600	—	1720/2225	2517	1811	4328	8
F-150 4x2	F17	138.5	5.4L V-8	4-Spd. Auto OD	7700	—	3105	2630	1961	4591	8
F-150 4x2	F17	138.5	5.4L V-8 NGV	4-Spd. Auto OD	7650	—	2645	2875	2129	5004	8
F-150 4x4	F18	120.2	4.2L V-6	5-Spd. Manual OD	6050	Warner 44-06	1705	2516	1829	4345	6½
F-150 4x4	F18	120.2	4.6L V-8	5-Spd. Manual OD	6250	Warner 44-06	1815	2602	1829	4431	6½
F-150 4x4	F18	120.2	5.4L V-8	4-Spd. Auto OD	6300	Warner 44-06	1735	2675	1889	4564	6½
F-150 4x4	F18	138.8	4.2L V-6	5-Spd. Manual OD	6050	Warner 44-06	1590	2617	1841	4458	8
F-150 4x4	F18	138.8	4.6L V-8	5-Spd. Manual OD	6250	Warner 44-06	1705	2703	1841	4544	8
F-150 4x4	F18	138.8	5.4L V-8	4-Spd. Auto OD	6300	Warner 44-06	1620	2784	1895	4679	8
F-150 4x4	F18	138.8	5.4L V-8	4-Spd. Auto OD	7700	Warner 44-06	2770	2898	2032	4930	8

(1) Engine/transmission combinations may not be available on all models, or in all areas.
(2) Includes weight of driver, passengers and optional equipment.
(3) Base curb weight is for standard equipment only.

F-150 MODEL LINEUP

2003
MODEL YEAR

F-SERIES MODEL	BODY CODE	WHEELBASE inches	ENGINE(1) liters	TRANSMISSION(1)	MIN./MAX. GVWR pounds	TRANSFER CASE	MAXIMUM PAYLOAD(2) pounds	BASE CURB WEIGHT(3)			PICKUP BOX NOMINAL LENGTH feet
								FRONT pounds	REAR pounds	TOTAL pounds	
REGULAR CAB FLARESIDE PICKUP											
F-150 4x2	X07	138.5	4.2L V-6	5-Spd. Manual OD	6050	—	1770	2404	1874	4278	6½
F-150 4x2	X07	138.5	4.6L V-8	5-Spd. Manual OD	6050	—	1685	2488	1876	4364	6½
F-150 4x2	X07	138.5	5.4L V-8	4-Spd. Auto OD	6300	—	1800	2571	1929	4500	6½
F-150 4x4	X08	138.8	4.6L V-8	5-Spd. Manual OD	6250	Warner 44-06	1555	2739	1954	4693	6½
F-150 4x4	X08	138.8	5.4L V-8	4-Spd. Auto OD	6500	Warner 44-06	1670	2820	2009	4828	6½
SUPERCAB STYLESIDE PICKUP											
F-150 4x2	X17	138.5	4.2L V-6	5-Spd. Manual OD	6050	—	1780	2397	1869	4266	6½
F-150 4x2	X17	138.5	4.6L V-8	5-Spd. Manual OD	6050	—	1695	2481	1871	4352	6½
F-150 4x2	X17	138.5	5.4L V-8	4-Spd. Auto OD	6300	—	1810	2564	1924	4488	6½
F-150 4x2	X17	138.5	5.4L V-8	4-Spd. Auto OD	7700	—	2970	2676	2052	4728	6½
F-150 4x2	X17	157.1	4.6L V-8	5-Spd. Manual OD	6050	—	1520	2605	1924	4529	8
F-150 4x2	X17	157.1	5.4L V-8	4-Spd. Auto OD	6300	—	1630	2685	1982	4667	8
F-150 4x4	X18	138.8	4.6L V-8	5-Spd. Manual OD	6250	Warner 44-06	1565	2732	1949	4681	6½
F-150 4x4	X18	138.8	5.4L V-8	4-Spd. Auto OD	6500	Warner 44-06	1680	2813	2003	4816	6½
F-150 4x4	X18	138.8	5.4L V-8	4-Spd. Auto OD	7700	Warner 44-06	2625	2940	2132	5072	6½
F-150 4x4	X18	157.4	4.6L V-8	5-Spd. Manual OD	6250	Warner 44-06	1400	2870	1979	4849	8
F-150 4x4	X18	157.4	5.4L V-8	4-Spd. Auto OD	6500	Warner 44-06	1515	2948	2036	4984	8
SUPERCREW PICKUP											
F-150 4x2	W07	138.5	4.6L V-8	4-Spd. Auto OD	6350	—	1660	2664	2022	4686	5½
F-150 4x2	W07	138.5	5.4L V-8	4-Spd. Auto OD	6600	—	1810	2721	2068	4789	5½
F-150 4x4	W08	138.8	4.6L V-8	4-Spd. Auto OD	6500	Warner 44-06	1460	2936	2100	5036	5½
F-150 4x4	W08	138.8	5.4L V-8	4-Spd. Auto OD	6750	Warner 44-06	1605	2994	2147	5141	5½

(1) Engine/transmission combinations may not be available on all models, or in all areas.
(2) Includes weight of driver, passengers and optional equipment.
(3) Base curb weight is for standard equipment only.

SUPER DUTY F-250/350 STYLESIDE PICKUP MODEL LINEUP

2003
MODEL YEAR

SUPER DUTY F-SERIES MODEL	BODY CODE	WHEELBASE inches	CA inches	STANDARD ENGINE[1] liters	STANDARD TRANSMISSION[1]	MAXIMUM GVWR pounds	TRANSFER CASE	MAXIMUM PAYLOAD[2] pounds	BASE CURB WEIGHT[3]			PICKUP NOMINAL LENGTH feet
									FRONT pounds	REAR pounds	TOTAL pounds	
REGULAR CAB STYLESIDE PICKUP												
F-250 4X2 SRW	F20	137	56.2[5]	5.4L V-8	6-Spd. Manual OD	8800	—	3380	3099	2321	5420	8
F-250 4X4 SRW	F21	137	56.2[5]	5.4L V-8	6-Spd. Manual OD	8800	NV271	2960	3435	2402	5837	8
F-350 4X2 SRW	F30	137	56.2[5]	5.4L V-8	6-Spd. Manual OD	9900/9700[4]	—	4485/4285[4]	3097/3097[4]	2318/2318[4]	5415/5415[4]	8
F-350 4X4 SRW	F31	137	56.2[5]	5.4L V-8	6-Spd. Manual OD	9900/9700[4]	NV271	4065/3865[4]	3433/3433[4]	2399/2399[4]	5832/5832[4]	8
F-350 4X2 DRW	F32	137	56.2[5]	5.4L V-8	6-Spd. Manual OD	11,200/11,000[4]♦	—	5540/5135[4]	3120/3256[4]	2538/2608[4]	5658/5864[4]	8
F-350 4X4 DRW	F33	137	56.2[5]	5.4L V-8	6-Spd. Manual OD	11,200/11,000[4]♦	NV271	5075/4665[4]	3469/3604[4]	2653/2727[4]	6122/6331[4]	8
SUPERCAB STYLESIDE PICKUP												
F-250 4X2 SRW	X20	141.8	40	5.4L V-8	6-Spd. Manual OD	8800	—	3195	3174	2427	5601	6¾
		158	56.2[5]			8800	—	3035	3279	2484	5763	8
F-250 4X4 SRW	X21	141.8	40	5.4L V-8	6-Spd. Manual OD	8800	NV271	2790	3511	2499	6010	6¾
		158	56.2[5]			8800	NV271	2625	3625	2549	6174	8
F-350 4X2 SRW	X30	141.8	40	5.4L V-8	6-Spd. Manual OD	9900/9700[4]	—	4300/4100[4]	3173/3173[4]	2423/2423[4]	5596/5596[4]	6¾
		158	56.2[5]	5.4L V-8		9900/9700[4]	—	4140/3940[4]	3277/3277[4]	2481/2481[4]	5758/5758[4]	8
F-350 4X4 SRW	X31	141.8	40	5.4L V-8	6-Spd. Manual OD	9900/9700[4]	NV271	3895/3695[4]	3510/3510[4]	2495/2495[4]	6005/6005[4]	6¾
		158	56.2[5]	5.4L V-8		9900/9700[4]	NV271	3730/3530[4]	3623/3623[4]	2546/2546[4]	6169/6169[4]	8
F-350 4X2 DRW	X32	158	56.2[5]	5.4L V-8	6-Spd. Manual OD	11,200/11,000[4]♦	—	5195/4330[4]	3301/3794[4]	2701/2873[4]	6002/6667[4]	8
F-350 4X4 DRW	X33	158	56.2[5]	5.4L V-8	6-Spd. Manual OD	11,200/11,000[4]♦	NV271	4740/4330[4]	3659/3794[4]	2770/2873[4]	6459/6667[4]	8

(1) Engine/transmission combinations may not be available on all models, or in all areas.
(2) Includes weight of driver, passengers and optional equipment.
(3) Base curb weight is for standard equipment only.
(4) California only.
(5) Available with Pickup Box Delete Regular Production Option (RPO).

NOTE: ♦ — SEE CHART ON FOLLOWING PAGE FOR 7.3L/6.0L V-8 DIESEL ENGINE WEIGHT RATINGS.

SUPER DUTY F-250/350/450 STYLESIDE PICKUP MODEL LINEUP

2003
MODEL YEAR

SUPER DUTY F-SERIES MODEL	BODY CODE	WHEELBASE inches	CA inches	STANDARD ENGINE[1] liters	STANDARD TRANSMISSION[1]	MAXIMUM GVWR pounds	TRANSFER CASE	MAXIMUM PAYLOAD[2] pounds	BASE CURB WEIGHT[3] FRONT pounds	BASE CURB WEIGHT[3] REAR pounds	BASE CURB WEIGHT[3] TOTAL pounds	PICKUP BOX NOMINAL LENGTH feet
CREW CAB STYLESIDE PICKUP												
F-250 4x2 SRW	W20	156.2	40	5.4L V-8	6-Spd. Manual OD	8800	—	2955	3302	2539	5841	6¾
		172.4	56.2[5]	5.4L V-8	6-Spd. Manual OD	8800	—	2810	3300	2586	5986	8
F-250 4x4 SRW	W21	156.2	40	5.4L V-8	6-Spd. Manual OD	8800	NV271	2525	3648	2623	6271	6¾
		172.4	56.2[5]	5.4L V-8	6-Spd. Manual OD	8800	NV271	2390	3757	2653	6410	8
F-350 4x2 SRW	W30	156.2	40	5.4L V-8	6-Spd. Manual OD	9900/9700[4]	—	4060/3860[4]	3300/3300[4]	2536/2536[4]	5836/5836[4]	6¾
		172.4	56.2[5]	5.4L V-8	6-Spd. Manual OD	9900/9700[4]	—	3915/3715[4]	3398/3398[4]	2583/2583[4]	5981/5981[4]	8
F-350 4x4 SRW	W31	156.2	40	5.4L V-8	6-Spd. Manual OD	9900/9700[4]	NV271	3630/3430[4]	3646/3646[4]	2620/2620[4]	6266/6266[4]	6¾
		172.4	56.2[5]	5.4L V-8	6-Spd. Manual OD	9900/9700[4]	NV271	3495/3295[4]	3755/3755[4]	2650/2650[4]	6405/6405[4]	8
F-350 4x2 DRW	W32	156.2	40	6.8L V-10	6-Spd. Manual OD	11,200/11,000[4] ♦	—	4975/4775[4]	3459/3459[4]	2764/2764[4]	6223/6223[4]	6¾
		172.4	56.2[5]	6.8L V-10	6-Spd. Manual OD	11,200/11,000[4] ♦	—	4765/4565[4]	3558/3558[4]	2875/2875[4]	6433/6433[4]	8
F-350 4x4 DRW	W33	156.2	40[5]	6.8L V-10	6-Spd. Manual OD	11,200/11,000[4] ♦	NV271	4500/4300[4]	3816/3816[4]	2880/2880[4]	6696/6696[4]	6¾
		172.4	56.2[5]	6.8L V-10	6-Spd. Manual OD	11,200/11,000[4] ♦	NV271	4300/4100[4]	3926/3926[4]	2974/2974[4]	6900/6900[4]	8

(1) Engine/transmission combinations may not be available on all models, or in all areas.
(2) Includes weight of driver, passengers and optional equipment.
(3) Base curb weight is for standard equipment only.
(4) California only.
(5) Available with Pickup Box Delete Regular Production Option (RPO).

NOTE: ♦ — SEE CHART BELOW FOR 7.3L/6.0L V-8 DIESEL ENGINE WEIGHT RATINGS.

SUPER DUTY F-350 DRW STYLESIDE WITH 7.3L/6.0L V-8 DIESEL ENGINE (49 STATES, CALIFORNIA REMAINS AT 11,000 LB GVWR)

SUPER DUTY F-SERIES MODEL	BODY CODE	WHEELBASE inches	ENGINE[1] liters	TRANSMISSION	MIN/MAX GVWR pounds	TRANSFER CASE	MAXIMUM PAYLOAD[1] pounds	CURB WEIGHT[2] FRONT pounds	CURB WEIGHT[2] REAR pounds	CURB WEIGHT[2] TOTAL pounds
REGULAR CAB										
F-350 4x2 DRW	F32	137	7.3L V-8	4-Spd. Auto OD	11,500	—	5235/5195[3]	3652/3679[3]	2612/2622[3]	6264/6301[3]
F-350 4x4 DRW	F33	137	7.3L V-8	4-Spd. Auto OD	11,500	NV271	4760/4725[3]	3994/4021[3]	2744/2754[3]	6733/6775[3]
SUPERCAB										
F-350 4x2 DRW	X32	158	7.3L V-8	4-Spd. Auto OD	11,500	—	4875/4840[3]	3838/3865[3]	2783/2793[3]	6621/6658[3]
F-350 4x4 DRW	X33	158	7.3L V-8	4-Spd. Auto OD	11,500	NV271	4425/4390[3]	4190/4217[3]	2882/2892[3]	7072/7109[3]
CREW CAB										
F-350 4x2 DRW	W32	156.2	7.3L V-8	4-Spd. Auto OD	11,500	—	4860/4825[3]	3863/3880[3]	2775/2795[3]	6638/6675[3]
		172.4	7.3L V-8	4-Spd. Auto OD	11,500	—	4650/4615[3]	3961/3988[3]	2886/2896[3]	6847/6884[3]
F-350 4x4 DRW	W33	156.2	7.3L V-8	4-Spd. Auto OD	11,500	NV271	4395/4360[3]	4213/4240[3]	2889/2899[3]	7102/7139[3]
		172.4	7.3L V-8	4-Spd. Auto OD	11,500	NV271	4195/4155[3]	4321/4348[3]	2983/2993[3]	7304/7341[3]

(1) Includes weight of driver, passengers and optional equipment. Payloads are with 4-speed Auto OD transmission (payloads will be less 6-speed Manual OD transmission).
(2) Curb weight is for standard equipment and 7.3L V-8/4-speed Auto OD transmission. Curb weight will be greater with 6-speed Manual OD transmission.
(3) Rating for 6.0L V-8/5-speed Auto OD transmission (late availability).

SUPER DUTY F-350/450/550 CHASSIS CAB MODEL LINEUP

2003
MODEL YEAR

SUPER DUTY F-SERIES MODEL	BODY CODE	WHEELBASE inches	CA inches	STANDARD ENGINE[1] liters	STANDARD TRANSMISSION[1]	MIN-MAX GVWR pounds	TRANSFER CASE	MAXIMUM PAYLOAD[2] pounds	BASE CURB WEIGHT[3] FRONT pounds	BASE CURB WEIGHT[3] REAR pounds	BASE CURB WEIGHT[3] TOTAL pounds
REGULAR CHASSIS CAB											
F-350 4x2 SRW	F34	140.8	60	5.4L V-8	6-Spd. Manual OD	9900/9700[4]	—	4820/4620[4]	3024/3024[4]	2055/2055[4]	5079/5079[4]
F-350 4x4 SRW	F35	140.8	60	5.4L V-8	6-Spd. Manual OD	9900/9700[4]	NV271	4385/4185[4]	3401/3401[4]	2113/2113[4]	5514/5514[4]
F-350 4x2 DRW	F36	140.8	60	6.8L V-10	6-Spd. Manual OD	11,200/11,000[4] ♦	—	5620/5460[4]	3231/3205[4]	2347/2331[4]	5578/5536[4]
		164.8	84	6.8L V-10	6-Spd. Manual OD	11,200/11,000[4] ♦	—	5520/5345[4]	3346/3328[4]	2333/2325[4]	5679/5653[4]
F-350 4x4 DRW	F37	140.8	60	6.8L V-10	6-Spd. Manual OD	11,200/11,000[4] ♦	NV271	5160/4995[4]	3672/3645[4]	2364/2356[4]	6036/6001[4]
		164.8	84	6.8L V-10	6-Spd. Manual OD	11,200/11,000[4] ♦	NV271	5045/4880[4]	3728/3702[4]	2426/2417[4]	6154/6119[4]
F-450 4x2 DRW	F46	140.8	60	6.8L V-10	6-Spd. Manual OD	15,000	—	8745	3469	2786	6255
		164.8	84	6.8L V-10	6-Spd. Manual OD	15,000	—	8640	3582	2775	6357
		188.8	108	6.8L V-10	6-Spd. Manual OD	15,000	—	8570	3622	2808	6430
		200.8	120	6.8L V-10	6-Spd. Manual OD	15,000	—	8330	3814	2853	6667
F-450 4x4 DRW	F47	140.8	60	6.8L V-10	6-Spd. Manual OD	15,000	NV271	8435	3721	2844	6565
		164.8	84	6.8L V-10	6-Spd. Manual OD	15,000	NV271	8325	3855	2818	6673
		188.8	108	6.8L V-10	6-Spd. Manual OD	15,000	NV271	8240	3907	2849	6756
		200.8	120	6.8L V-10	6-Spd. Manual OD	15,000	NV271	7990	4083	2926	7009
F-550 4x2 DRW	F56	140.8	60	6.8L V-10	4-Spd. Auto OD	17,500	—	11,190	3435	2872	6307
		164.8	84	6.8L V-10	4-Spd. Auto OD	17,500/19,000	—	11,090/12,600	3553/3541	2857/2859	6410/6400
		188.8	108	6.8L V-10	4-Spd. Auto OD	17,500	—	11,015	3593	2890	6483
		200.8	120	6.8L V-10	4-Spd. Auto OD	17,500/19,000	—	10,790/12,180[4]	3753/3803	2954/3016	6707/6819
F-550 4x4 DRW	F57	140.8	60	6.8L V-10	4-Spd. Auto OD	17,500	NV271	10,865	3705	2928	6633
		164.8	84	6.8L V-10	4-Spd. Auto OD	17,500	NV271	10,750	3835	2912	6747
		188.8	108	6.8L V-10	4-Spd. Auto OD	17,500	NV271	10,670	3887	2943	6830
		200.8	120	6.8L V-10	4-Spd. Auto OD	17,500	NV271	10,450	4053	2997	7050
SUPER CHASSIS CAB											
F-350 4x2 SRW	X34	161.8	60	5.4L V-8	6-Spd. Manual OD	9900/9700[4]	—	4465/4265[4]	3229/3229[4]	2203/2203[4]	5432/5432[4]
F-350 4x4 SRW	X35	161.8	60	5.4L V-8	6-Spd. Manual OD	9900/9700[4]	NV271	4030/3830[4]	3622/3622[4]	2245/2245[4]	5867/5867[4]
F-350 4x2 DRW	X36	161.8	60	6.8L V-10	6-Spd. Manual OD	11,200/11,000[4] ♦	—	5265/5090[4]	3438/3420[4]	2494/2487[4]	5932/5907[4]
F-350 4x4 DRW	X37	161.8	60	6.8L V-10	6-Spd. Manual OD	11,200/11,000[4] ♦	NV271	4855/4690[4]	3830/3804[4]	2514/2505[4]	6344/6309[4]
F-450 4x2 DRW	X46	161.8	60	6.8L V-10	6-Spd. Manual OD	15,000	—	8405	3626	2968	6594
F-450 4x4 DRW	X47	161.8	60	6.8L V-10	6-Spd. Manual OD	15,000	NV271	7990	4018	2988	7006
F-550 4x2 DRW	X56	161.8	60	6.8L V-10	4-Spd. Auto OD	17,500	—	10,850	3597	3050	6647
F-550 4x4 DRW	X57	161.8	60	6.8L V-10	4-Spd. Auto OD	17,500	NV271	10,420	3998	3082	7080

(1) Engine/transmission combinations may not be available on all models, or in all areas.
(2) Includes weight of driver, passengers and optional equipment.
(3) Base curb weight is for standard equipment only.
(4) California only.

NOTE: ♦ — SEE CHART ON FOLLOWING PAGE FOR 7.3L/6.0L V-8 DIESEL ENGINE WEIGHT RATINGS.

SUPER DUTY F-350/450/550 CHASSIS CAB MODEL LINEUP

SUPER DUTY F-SERIES MODEL	BODY CODE	WHEELBASE inches	CA inches	ENGINE[1] liters	STANDARD TRANSMISSION[1]	MIN-MAX GVWR pounds	TRANSFER CASE	MAXIMUM PAYLOAD[2] pounds	CURB WEIGHT[3]		
									FRONT pounds	REAR pounds	TOTAL pounds
CREW CHASSIS CAB											
F-350 4x2 SRW	W34	176.2	60	5.4L V-8	6-Spd. Manual OD	9900/9700[4]	—	4265/4065[4]	3364/3365[4]	2268/2268[4]	5632/5632[4]
F-350 4x4 SRW	W35	176.2	60	5.4L V-8	6-Spd. Manual OD	9900/9700[4]	NV271	3815/3615[4]	3755/3755[4]	2326/2326[4]	6081/6081[4]
F-350 4x2 DRW	W36	176.2	60	6.8L V-10	6-Spd. Manual OD	11,200/11,000[4] ♦	—	5080/4905[4]	3546/3529[4]	2570/2562[4]	6116/6091[4]
F-350 4x4 DRW	W37	176.2	60	6.8L V-10	6-Spd. Manual OD	11,200/11,000[4] ♦	NV271	4620/4455[4]	3960/3935[4]	2617/2607[4]	6577/6542[4]
F-450 4x2 DRW	W46	176.2	60	6.8L V-10	6-Spd. Manual OD	15,000	—	8175	3789	3032	6821
F-450 4x2 DRW	W46	200.2	84	6.8L V-10	6-Spd. Manual OD	15,000	—	8100	3829	3068	6897
F-450 4x4 DRW	W47	176.2	60	6.8L V-10	6-Spd. Manual OD	15,000	NV271	7855	4083	3060	7143
F-450 4x4 DRW	W47	200.2	84	6.8L V-10	6-Spd. Manual OD	15,000	NV271	7770	4135	3094	7229
F-550 4x2 DRW	W56	176.2	60	6.8L V-10	4-Spd. Auto OD	17,500	—	10,610	3790	3097	6887
F-550 4x2 DRW	W56	200.2	84	6.8L V-10	4-Spd. Auto OD	17,500	—	10,535	3829	3134	6963
F-550 4x4 DRW	W57	176.2	60	6.8L V-10	4-Spd. Auto OD	17,500	NV271	10,285	4060	3154	7214
F-550 4x4 DRW	W57	200.2	84	6.8L V-10	4-Spd. Auto OD	17,500	NV271	10,215	4135	3150	7285

(1) Engine/transmission combinations may not be available on all models, or in all areas.
(2) Includes weight of driver, passengers and optional equipment.
(3) Base curb weight is for standard equipment only.
(4) California only.

NOTE: ♦ — SEE CHART BELOW FOR 7.3L/6.0L V-8 DIESEL ENGINE WEIGHT RATINGS.

SUPER DUTY F-350 CHASSIS CAB WITH 7.3L/6.0L V-8 DIESEL ENGINE (12,500 LB GVWR)

SUPER DUTY F-SERIES MODEL	BODY CODE	WHEELBASE inches	CA inches	ENGINE[1] liters	STANDARD TRANSMISSION	MIN-MAX GVWR pounds	TRANSFER CASE	MAXIMUM PAYLOAD[1] pounds	CURB WEIGHT[2]		
									FRONT pounds	REAR pounds	TOTAL pounds
REGULAR CHASSIS CAB											
F-350 4x2 DRW	F36	140.8	60	7.3L V-8	4-Spd. Auto OD	12,500	—	6525/6485[3]	3612/3639[3]	2363/2373[3]	5975/6012[3]
		164.8	84	7.3L V-8	4-Spd. Auto OD	12,500	—	6400/6360[3]	3741/3768[3]	2359/2369[3]	6100/6137[3]
F-350 4x4 DRW	F37	140.8	60	7.3L V-8	4-Spd. Auto OD	12,500	NV271	6050/6010[3]	4057/4084[3]	2393/2403[3]	6450/6487[3]
		164.8	84	7.3L V-8	4-Spd. Auto OD	12,500	NV271	5930/5895[3]	4115/4142[3]	2451/2461[3]	6566/6603[3]
SUPER CHASSIS CAB											
F-350 4x2 DRW	X36	161.8	60	7.3L V-8	4-Spd. Auto OD	12,500	—	6135/6100[3]	3841/3868[3]	2522/2532[3]	6363/6400[3]
F-350 4x4 DRW	X37	161.8	60	7.3L V-8	4-Spd. Auto OD	12,500	NV271	5735/5695[3]	4225/4252[3]	2540/2550[3]	6765/6802[3]
CREW CHASSIS CAB											
F-350 4x2 DRW	W36	176.2	60	7.3L V-8	4-Spd. Auto OD	12,500	—	5955/5915[3]	3950/3977[3]	2594/2604[3]	6544/6581[3]
F-350 4x4 DRW	W37	176.2	60	7.3L V-8	4-Spd. Auto OD	12,500	NV271	5500/5465[3]	4356/4383[3]	2640/2650[3]	6996/7033[3]

(1) Includes weight of driver, passengers and optional equipment. Payloads shown are with 4-speed Auto OD transmission (payloads will be less with 6-speed Manual OD transmission).
(2) Curb weight is for standard equipment and 7.3L V-8/4-speed Auto OD transmission. Curb weight will be greater with 6-speed Manual OD transmission.
(3) Rating for 6.0L V-8/5-speed Auto OD transmission (late availability).

CLASS A MOTOR HOME CHASSIS MODEL LINEUP

SUPER DUTY F-SERIES CLASS A MOTOR HOME CHASSIS (F-53)

MODEL	BODY CODE	WHEELBASE inches	STANDARD ENGINE liters	STANDARD TRANSMISSION	GVWR pounds	TRANSFER CASE	PAYLOAD pounds	CURB WEIGHT(1)		
								FRONT pounds	REAR pounds	TOTAL pounds
F-SUPER DUTY CLASS A MOTOR HOME CHASSIS	F53	178	6.8L V-10	4-Spd. Auto OD	15,700	—	10,054	3091	2555	5646
		190				—	9995	3132	2573	5705
		178			18,000	—	12,279	3120	2601	5721
		190				—	12,209	3157	2634	5791
		208				—	12,131	3208	2661	5869
		228				—	12,053	3250	2697	5947
		208			20,500	—	14,559	3228	2713	5941
		228				—	14,481	3270	2749	6019
		208			22,000	—	16,039	3228	2733	5961
		228				—	15,961	3270	2769	6039

(1) Base curb weight is for standard equipment only.

2003 VIN ELEMENT CODING INFORMATION

VIN – How to Use It

Here is your 2003 guide to interpreting universal Vehicle Identification Numbers.

All vehicle body codes shown apply to 2003 models only. For previous model year body type codes, see reference material at your dealership or previous VIN Guides published by the Vehicle Remarketing Department.

Universal Vehicle Identification Numbers (VINs) have 17 “positions”. There is a number or a letter in each position (see example below).

In this guide, you will find decoding for positions 5-7 (line, series and body type), position 8 (engine type), and position 11 (assembly plant).

The VIN data are preliminary and are prepared for the exclusive use of Ford Division dealers. More comprehensive dealership VIN references should be checked to confirm accuracy.

Check This Example

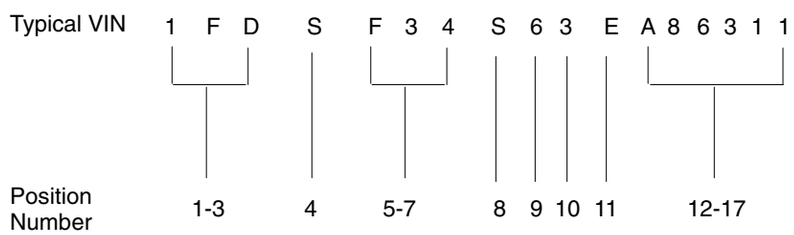

Positions 1-3	World Manufacturer Identifier
Position 4	Restraint System Type (Passenger Car Only) Brake Type, GVWR Class, and Restraint System Type (Trucks, MPVs and Buses)
Positions 5-7	Line, Series, Body Type
Position 8	Engine Type
Position 9	Check Digit
Position 10	Model Year
Position 11	Assembly Plant
Positions 12-17	Production Sequence Number

World Manufacturing Identifiers (WMI) (Positions 1-3)

POSITIONS 1-3	VEHICLE MANUFACTURER	MAIKE	TYPE
1FM	FORD MOTOR COMPANY, USA	FORD	MPV
1FT	FORD MOTOR COMPANY, USA	FORD	TRUCK (COMPLETED VEHICLE)
1FD	FORD MOTOR COMPANY, USA	FORD	INCOMPLETE VEHICLE
1FC	FORD MOTOR COMPANY, USA	FORD	STRIPPED CHASSIS
1FB	FORD MOTOR COMPANY, USA	FORD	BUS
1FF	FORD MOTOR COMPANY, USA	FORD	MOTOR VEHICLE EQUIPEMENT W/O ENGINE/POWERTRAIN
2FM	FORD MOTOR COMPANY OF CANADA, LTD.	FORD	MPV
2FT	FORD MOTOR COMPANY OF CANADA, LTD.	FORD	TRUCK (COMPLETED VEHICLE)
2FD	FORD MOTOR COMPANY OF CANADA, LTD.	FORD	INCOMPLETE VEHICLE
2FC	FORD MOTOR COMPANY OF CANADA, LTD.	FORD	STRIPPED CHASSIS
2FB	FORD MOTOR COMPANY OF CANADA, LTD.	FORD	BUS
2FF	FORD MOTOR COMPANY, USA	FORD	MOTOR VEHICLE EQUIPEMENT W/O ENGINE/POWERTRAIN
3FB	FORD MOTOR COMPANY (MEXICO)	FORD	BUS
3FC	FORD MOTOR COMPANY (MEXICO)	FORD	STRIPPED CHASSIS
3FD	FORD MOTOR COMPANY (MEXICO)	FORD	INCOMPLETE VEHICLE
3FE	FORD MOTOR COMPANY (MEXICO)	FORD	INCOMPLETE VEHICLE
3FM	FORD MOTOR COMPANY (MEXICO)	FORD	MPV
3FT	FORD MOTOR COMPANY (MEXICO)	FORD	TRUCK (COMPLETED VEHICLE)

Brake System and GVWR Class for Trucks and MPVs (Position 4)
Brake System (only) for Buses and Incomplete Vehicles - GVWR classes as shown are not applicable.

BRAKE SYSTEM	GVWR CLASS	GVWR RANGE	TRUCKS without Airbags	LIGHT TRUCKS with Driver and Passenger Airbags	LIGHT TRUCKS with Driver and Passenger Airbags and Side Airbags, Curtains or Canopies	RHD U.S. POSTAL SERVICE EXPLORER without Airbags
Hydraulic	Class A	Not greater than 3,000 pounds		T		
Hydraulic	Class B	3,001 - 4,000 pounds		U	B	
Hydraulic	Class C	4,001 - 5,000 pounds		Y	C	
Hydraulic	Class D	5,001 - 6,000 pounds		Z	D	M
Hydraulic	Class E	6,001 - 7,000 pounds		R	E	G
Hydraulic	Class F	7,001 - 8,000 pounds		P	F	
Hydraulic	Class G	8,001 - 8,500 pounds		V		
Hydraulic	Class G	8,501 - 9,000 pounds	H	N		
Hydraulic	Class H	9,001 - 10,000 pounds	J	S		
Hydraulic	Class 3	10,001 - 14,000 pounds	K	W		
Hydraulic	Class 4	14,001 - 16,000 pounds	L	X		
Hydraulic	Class 5	16,001 - 19,500 pounds	M	A		
Hydraulic	Class 6	19,501 - 26,000 pounds	N			
Hydraulic	Class 7	26,001 - 33,000 pounds	P			
Air	Class 3	10,001 - 14,000 pounds	T			
Air	Class 4	14,001 - 16,000 pounds	U			
Air	Class 5	16,001 - 19,500 pounds	V			
Air	Class 6	19,501 - 26,000 pounds	W			
Air	Class 7	26,001 - 33,000 pounds	X			

2003 VIN ELEMENT CODING INFORMATION

2003
MODEL YEAR

Line, Series, Chassis, Cab Type or Body Type for Trucks, Multipurpose Passenger Vehicles (MPVs), Buses, and Incomplete Vehicles (IVs) with GVW Ratings of 4990 killograms (11,000 pounds) or less: (Positions 5, 6, 7)

VIN CODE	VEHICLE LINE	SERIES	CHASSIS TYPE	CAB or BODY TYPE	VEHICLE TYPE
Make - FORD					
R10	Ranger		4x2	Pickup-Regular Cab	Truck
R11	Ranger		4x4	Pickup-Regular Cab	Truck
R14	Ranger		4x2	Pickup-SuperCab 2-Dr	Truck
R15	Ranger		4x4	Pickup-SuperCab 2-Dr	Truck
R44	Ranger		4x2	Pickup-SuperCab 4-Dr	Truck
R45	Ranger		4x4	Pickup-SuperCab 4-Dr	Truck
R08	Ranger (Electric)	EV	4x2	Pickup-Regular Cab	Truck
F07	F-Series	F150	4x2	Pickup-Regular Cab Flareside	Truck or IV
W07	F-Series	F150	4x2	Pickup-Super Crew	Truck or IV
X08	F-Series	F150	4x4	Pickup-SuperCab Flareside	Truck or IV
F17	F-Series	F150	4x2	Pickup-Regular Cab Styleside	Truck or IV
X07	F-Series	F150	4x2	Pickup-SuperCab Flareside	Truck or IV
F08	F-Series	F150	4x4	Pickup-Regular Cab Flareside	Truck or IV
W08	F-Series	F150	4x4	Pickup-Super Crew	Truck or IV
X17	F-Series	F150	4x2	Pickup-SuperCab Styleside	Truck or IV
F18	F-Series	F150	4x4	Pickup-Regular Cab Styleside	Truck or IV
X18	F-Series	F150	4x4	Pickup-SuperCab Styleside	Truck or IV
F20	F-Series	F250	4x2	Pickup-Regular Cab Styleside	Truck or IV
X20	F-Series	F250	4x2	Pickup-SuperCab Styleside	Truck or IV
W20	F-Series	F250	4x2	Pickup-Crew Cab Styleside	Truck or IV
F21	F-Series	F250	4x4	Pickup-Regular Cab Styleside	Truck or IV
X21	F-Series	F250	4x4	Pickup-SuperCab Styleside	Truck or IV
W21	F-Series	F250	4x4	Pickup-Crew Cab Styleside	Truck or IV
F30	F-Series	F350	4x2	Pickup-Regular Cab	Truck or IV
X30	F-Series	F350	4x2	Pickup-SuperCab	Truck or IV
W30	F-Series	F350	4x2	Pickup-Crew Cab	Truck or IV

VIN CODE	VEHICLE LINE	SERIES	CHASSIS TYPE	CAB or BODY TYPE	VEHICLE TYPE
Make - FORD					
F31	F-Series	F350	4x4	Pickup-Regular Cab	Truck or IV
X31	F-Series	F350	4x4	Pickup-SuperCab	Truck or IV
W31	F-Series	F350	4x4	Pickup-Crew Cab	Truck or IV
F32	F-Series	F350 DRW(1)	4x2	Pickup-Regular Cab	Truck or IV
X32	F-Series	F350 DRW	4x2	Pickup-SuperCab	Truck or iV
W32	F-Series	F350 DRW	4x2	Pickup-Crew Cab	Truck or IV
F33	F-Series	F350 DRW	4x4	Pickup-Regular Cab	Truck or IV
X33	F-Series	F350 DRW	4x4	Pickup-SuperCab	Truck or IV
W33	F-Series	F350 DRW	4x4	Pickup-Crew Cab	Truck or IV
F34	F-Series	F350	4x2	Chassis Cab-Regular Cab	IV
X34	F-Series	F350	4x2	Chassis Cab-SuperCab	IV
W34	F-Series	F350	4x2	Chassis Cab-Crew Cab	IV
F35	F-Series	F350	4x4	Chassis Cab-Regular Cab	IV
X35	F-Series	F350	4x4	Chassis Cab-SuperCab	IV
W35	F-Series	F350	4x4	Chassis Cab-Crew Cab	IV
F36	F-Series	F350 DRW	4x2	Chassis Cab-Regular Cab	IV
X36	F-Series	F350 DRW	4x2	Chassis Cab-SuperCab	IV
W36	F-Series	F350 DRW	4x2	Chassis Cab-Crew Cab	IV
F37	F-Series	F350 DRW	4x4	Chassis Cab-Regular Cab	IV
X37	F-Series	F350 DRW	4x4	Chassis Cab-SuperCab	IV
W37	F-Series	F350 DRW	4x4	Chassis Cab-Crew Cab	IV

(1) “DRW” means Dual Rear Wheels.
NOTE: Special Order (VSO) units will be coded with the appropriate series VIN codes listed above.

2003 VIN ELEMENT CODING INFORMATION

Line, Series, Chassis, Cab Type or Body Type for Trucks, Multipurpose Passenger Vehicles (MPVs), Buses, and Incomplete Vehicles (IVs) : (Positions 5, 6, 7)

VIN CODE	VEHICLE LINE	SERIES	CHASSIS TYPE	CAB or BODY TYPE	VEHICLE TYPE
Make - FORD					
A50	Windstar	Base	4x2	3-Door Wagon(3)	MPV
A51	Windstar	LX	4x2	4-Door Wagon	MPV
A52	Windstar	SE	4x2	4-Door Wagon	MPV
A53	Windstar	SEL	4x2	4-Door Wagon	MPV
A54	Windstar		4x2	3-Door Cargo Van(3)	Truck
A55(2)	Windstar	LX	4x2	3-Door Wagon(3)	MPV
A56	Windstar	SEL	4x2	4-Door Wagon	MPV
A57	Windstar	SE Sport	4x2	4-Door Wagon	MPV
A58	Windstar	Limited	4x2	4-Door Wagon	IV
C35	E-Series	E-350	4x2	Chassis Cab	IV
C45	E-Series	E-450	4x2	Chassis Cab	IV
C55	E-Series	E-550	4x2	Chassis Cab	IV
E11	E-150	XL	4x2	Regular Wagon	MPV
E14	E-Series	E-150	4x2	Cargo Van	Truck or IV
E24	E-Series	E-250	4x2	Cargo Van	Truck or IV
E29	E-Series	E-250	4x2	Stripped Chassis	IV
E31	E-350	XLT	4x2	H.D. Wagon	MPV, IV or Bus(1)
E34	E-Series	E-350	4x2	Cargo Van	Truck or IV
E35	E-Series	E-350	4x2	Cutaway	IV
E39	E-Series	E-350	4x2	Stripped Chassis	IV
S31	E-350	XLT	4x2	H.D. Extended Wagon	MPV, IV or Bus(1)
S24	E-Series	E-250	4x2	Extended Cargo Van	Truck or IV
S34	E-Series	E-350	4x2	Extended Cargo Van	Truck or IV

(1) Excludes school bus.
(2) Canada only.
(3) 4th door optional.
(4) “DRW” means Dual Rear Wheels.

VIN CODE	VEHICLE LINE	SERIES	CHASSIS TYPE	CAB or BODY TYPE	VEHICLE TYPE
Make - FORD					
E45	E-Series	E-450	4x2	Cutaway	IV
E49	E-Series	E-450	4x2	Stripped Chassis	IV
E55	E-Series	E-550	4x2	Cutaway	IV
F07	F-Series	F-150	4x2	Pickup-Regular Cab Flareside	Truck
W07	F-Series	F-150	4x2	Pickup-SuperCrew	Truck
X07	F-Series	F-150	4x2	Pickup-SuperCab Flareside	Truck
F08	F-Series	F-150	4x4	Pickup-Regular Cab Flareside	Truck
W08	F-Series	F-150	4x4	Pickup-SuperCrew	Truck
X08	F-Series	F-150	4x4	Pickup-SuperCab Flareside	Truck
F17	F-Series	F-150	4x2	Pickup-Regular Cab Styleside	Truck
X17	F-Series	F-150	4x2	Pickup-SuperCab Styleside	Truck
F18	F-Series	F-150	4x4	Pickup-Regular Cab Styleside	Truck
X18	F-Series	F-150	4x4	Pickup-SuperCab Styleside	Truck
F20	F-Series	F-250	4x2	Pickup-Regular Cab	Truck or IV
X20	F-Series	F-250	4x2	Pickup-SuperCab	Truck or IV
W20	F-Series	F-250	4x2	Pickup-Crew Cab	Truck or IV
F21	F-Series	F-250	4x4	Pickup-Regular Cab	Truck or IV
X21	F-Series	F-250	4x4	Pickup-SuperCab	Truck or IV
W21	F-Series	F-250	4x4	Pickup-Crew Cab	Truck or IV
F30	F-Series	F-350	4x2	Pickup-Regular Cab	Truck or IV
X30	F-Series	F-350	4x2	Pickup-SuperCab	Truck or IV
W30	F-Series	F-350	4x2	Pickup-Crew Cab	Truck or IV
F31	F-Series	F-350	4x4	Pickup-Regular Cab	Truck or IV
X31	F-Series	F-350	4x4	Pickup-SuperCab	Truck or IV
W31	F-Series	F-350	4x4	Pickup-Crew Cab	Truck or IV
F32	F-Series	F-350 DRW(4)	4x2	Pickup-Regular Cab	Truck or IV
X32	F-Series	F-350 DRW	4x2	Pickup-SuperCab	Truck or IV
W32	F-Series	F-350 DRW	4x2	Pickup-Crew Cab	Truck or IV
F33	F-Series	F-350 DRW	4x4	Pickup-Regular Cab	Truck or IV
X33	F-Series	F-350 DRW	4x4	Pickup-SuperCab	Truck or IV
W33	F-Series	F-350 DRW	4x4	Pickup-Crew Cab	Truck or IV
F34	F-Series	F-350	4x2	Chassis Cab-Regular Cab	IV
X34	F-Series	F-350	4x2	Chassis Cab-SuperCab	IV
W34	F-Series	F-350	4x2	Chassis Cab-Crew Cab	IV

2003 VIN ELEMENT CODING INFORMATION

Line, Series, Chassis, Cab Type or Body Type for Trucks, Multipurpose Passenger Vehicles (MPVs), Buses, and Incomplete Vehicles (IVs) : (Positions 5, 6, 7)

VIN CODE	VEHICLE LINE	SERIES	CHASSIS TYPE	CAB or BODY TYPE	VEHICLE TYPE
Make - FORD					
F35	F-Series	F-350	4x4	Chassis Cab-Regular Cab	IV
X35	F-Series	F-350	4x4	Chassis Cab-SuperCab	IV
W35	F-Series	F-350	4x4	Chassis Cab-Crew Cab	IV
F36	F-Series	F-350 DRW(4)	4x2	Chassis Cab-Regular Cab	IV
X36	F-Series	F-350 DRW	4x2	Chassis Cab-SuperCab	IV
W36	F-Series	F-350 DRW	4x2	Chassis Cab-Crew Cab	IV
F37	F-Series	F-350 DRW	4x4	Chassis Cab-Regular Cab	IV
X37	F-Series	F-350 DRW	4x4	Chassis Cab-SuperCab	IV
W37	F-Series	F-350 DRW	4x4	Chassis Cab-Crew Cab	IV
W42	F-Series	F-450 DRW	4x2	Pickup-Crew Cab	Truck or IV
W43	F-Series	F-450 DRW	4x4	Pickup-Crew Cab	Truck or IV
F46	F-Series	F-450 DRW	4x2	Chassis Cab-Regular Cab	IV
X46	F-Series	F-450 DRW	4x2	Chassis Cab-SuperCab	IV
W46	F-Series	F-450 DRW	4x2	Chassis Cab-Crew Cab	IV
F47	F-Series	F-450 DRW	4x4	Chassis Cab-Regular Cab	IV
X47	F-Series	F-450 DRW	4x4	Chassis Cab-SuperCab	IV
W47	F-Series	F-450 DRW	4x4	Chassis Cab-Crew Cab	IV
F53	F-Series	F-550 DRW	4x2	Class A Motor Home Chassis	IV
F56	F-Series	F-550 DRW	4x2	Chassis Cab-Regular Cab	IV
X56	F-Series	F-550 DRW	4x2	Chassis Cab-SuperCab	IV
W56	F-Series	F-550 DRW	4x2	Chassis Cab-Crew Cab	IV
F57	F-Series	F-550 DRW	4x4	Chassis Cab-Regular Cab	IV
X57	F-Series	F-550 DRW	4x4	Chassis Cab-SuperCab	IV
W57	F-Series	F-550 DRW	4x4	Chassis Cab-Crew Cab	IV
F65	F-Series	F-650 DRW	4x2	Chassis Cab-Regular Cab	IV
X65	F-Series	F-650 DRW	4x2	Chassis Cab-SuperCab	IV
W65	F-Series	F-650 DRW	4x2	Chassis Cab-Crew Cab	IV
F75	F-Series	F-750 DRW	4x2	Chassis Cab-Regular Cab	IV
X75	F-Series	F-750 DRW	4x2	Chassis Cab-SuperCab	IV
W75	F-Series	F-750 DRW	4x2	Chassis Cab-Crew Cab	IV

(4) “DRW” means Dual Rear Wheels.

2003 VIN ELEMENT CODING INFORMATION

2003
MODEL YEAR

Page 19 INTRODUCTION

NOTE: Engine types are divided into four distinct groups: Passenger Car, Light Truck/MPV, Light/Medium Truck and Electric Vehicle. Each group is coded independently of the other three groups and the truck codes are listed here in separate tables.

Engine Type-Displacement, Cylinders, Fuel Type, Manufacturer and Horsepower (H.P.) Ratings (Position 8)

VIN CODE	DISPLACEMENT/ LITER	CYLINDERS	FUEL	MANUFACTURER	NET BRAKE H.P.
Light Truck/MPV					
B	2.0 SEFI-DOHC	I-4	Gasoline	Ford	127
D	2.3 EFI-DOHC	I-4	Gasoline	Ford	135
U	3.0 EFI	V-6	Gasoline	Ford	154
V	3.0 EFI-FFV	V-6	Gasoline/E85	Ford	154
1	3.0 SEFI-DOHC	V-6	Gasoline	Ford	201
4	3.8 EFI-SPI	V-6	Gasoline	Ford	200
E	4.0 EFI-SOHC	V-6	Gasoline	Ford	207-210
K	4.0 SOHC EFI-FFV	V-6	Gasoline/E85	Ford	207-210
2	4.2 EFI-SPI	V-6	Gasoline	Ford	191-202
G	4.6 EFI-SOHC (R)	V-8	Gasoline	Ford	225-239
W	4.6 EFI-SOHC (R)	V-8	Gasoline	Ford	225-239
L	5.4 EFI-SOHC (W)	V-8	Gasoline	Ford	235-260
3	5.4 EFI-SOHC SC	V-8	Gasoline	Ford	380
M	5.4 EFI-SOHC (W)	V-8	Natural Gas (CNG)	Ford	255
A	5.4 DOHC (W)	V-8	Gasoline	Ford	300
R	5.4 DOHC (R)	V-8	Gasoline	Ford	300
Z	5.4 EFI-SOHC (W)	V-8	Gasoline-GFP	Ford	255-260
S	6.8 EFI-SOHC (W)	V-10	Gasoline	Ford	265-275
P	6.0	V-8	Diesel	Navistar	325
F	7.3 D-Turbo-DI	V-8	Diesel	Navistar	215-275

"EFI" : Electronic Fuel Injection
"DOHC" : Double Overhead Camshaft
"FFV" : Flexible Fuel Vehicle
"Turbo" : Turbocharged
"IDI" : Indirect Injection
"(W)" : Windsor Engine Plant
"(D)" : Diesel
"SOHC" : Single Overhead Camshaft
"SPI" : Split Port Induction
"SHO" : Super High Output
"E85" : Ethanol Flexible Fuel
"DI" : Direct Injection
"(R)" : Romeo Engine Plant
"SC" : Supercharged

"GFP" means Gaseous Fuel Prep. Gaseous fuel includes Natural Gas and Liquified Petroleum Gas "LPG" (Propane). Leaves Ford Assy. Plant as a gasoline engine but suitable for aftermarket conversion.

Engine Type-Displacement, Cylinders, Fuel Type, Manufacturer and Horsepower (H.P.) Ratings (Position 8)

VIN CODE	DISPLACEMENT/ LITER	CYLINDERS	FUEL	MANUFACTURER	NET BRAKE H.P.
Light/Medium/Heavy Truck (with GVW Ratings over 11,000 pounds)					
L	5.4 EFI-SOHC (W)	V-8	Gasoline	Ford	255-260
S	6.8 EFI-SOHC (W)	V-10	Gasoline	Ford	305-310
Z[1]	6.8 EFI-SOHC (W)	V-10	Gasoline-GFP	Ford	305-310
P	6.0	V-8	Diesel	Navistar	325
F	7.3 D-TURBO -DI	V-8	Diesel	Navistar	215-275
1	5.9	I-6	Diesel	Cummins, Model ISB	175 HP/420 lb -ft
4	5.9	I-6	Diesel	Cummins, Model ISB	195 HP/520 lb-ft
8	5.9	I-6	Diesel	Cummins B5.9E	210 HP/520 lb-ft
Y	5.9	I-6	Diesel	Cummins B5.9E	215 HP/520 lb-ft
B	5.9	I-6	Diesel	Cummins B5.9E	225 HP/605 lb-ft
G	5.9	I-6	Diesel	Cummins B5.9E	240 HP/605 lb-ft
J	5.9	I-6	Diesel	Cummins B5.9E	245 HP/660 lb-ft
V	5.9	I-6	Diesel	Cummins B5.9E	260 HP/550 lb-ft
X	5.9	I-6	Diesel	Cummins B5.9E	260 HP/660 lb-ft
A	7.2	I-6	Diesel	Caterpillar 3126B	190 HP/520 lb-ft
H	7.2	I-6	Diesel	Caterpillar 3126B	210 HP/605 lb-ft
2	7.2	I-6	Diesel	Caterpillar 3126B	210 HP/520 lb-ft
N	7.2	I-6	Diesel	Caterpillar 3126B	230 HP/660 lb-ft
R	7.2	I-6	Diesel	Caterpillar 3126B	250 HP/660 lb-ft
7[2]	7.2	I-6	Diesel	Caterpillar 3126B	300 HP/860 lb-ft
5	7.3	V-8	Diesel	Navistar	210 HP/485 lb-ft
6	7.3	V-8	Diesel	Navistar	210 HP/520 lb-ft

[1] Engine only available on 11,000 lbs and greater
[2] Available with F650 Super CrewZer Model only

DELETE ENGINE (applicable to all groups)
0 (Zero) DSO Glider - Delete Engine on motor vehicle equipment only.

VIN CODE	POWER	NOMINAL VOLTAGE	FUEL	MANUFACTURER	BATTERY PACK	GROSS H.P. RANGE
Electric Vehicles						
7	71kw	312 volts	Electric	Siemens	Lead/Acid	90
1	76kw	300 volts	Electric	Siemens	NiMH	90

VIN Check Digit (Position 9)
The check digit must have a value of 0, 1, 2, 3, 4, 5, 6, 7, 8, 9, or X.

2003 VIN ELEMENT CODING INFORMATION

Vehicle Model Year (Position 10)

VIN CODE	YEAR	VIN CODE	YEAR	VIN CODE	YEAR
B	1981	N	1992	3	2003
C	1982	P	1993	4	2004
D	1983	R	1994	5	2005
E	1984	S	1995	6	2006
F	1985	T	1996	7	2007
G	1986	V	1997	8	2008
H	1987	W	1998	9	2009
J	1988	X	1999	A	2010
K	1989	Y	2000	B	2011
L	1990	1	2001	C	2012
M	1991	2	2002	D	2013

Plant of Manufacture (Position 11)

The plant of manufacture VIN code is designated as follows:

VIN CODE	Vehicle Assembly Plant Name: location	Light Trucks/ MPVs	Medium Trucks
B	Oakville: Oakville, Ont.	X	
C	Ontario Truck: Oakville, Ont.	X	
D	Ohio: Avon Lake, OH	X	
E	Kentucky Truck: Jefferson County, KY	X	
H	Lorain: Lorain, OH	X	
K	Kansas City: Claycomo, MO	X	
L	Michigan Truck: Wayne, MI	X	
M	Cuautitian: Cuautitlan, Mexico		X
N	Norfolk: Norfolk, VA	X	
P	Twin Cities: St. Paul, MN	X	
T	Edison: Edison, NJ	X	
U	Louisville: Louisville, KY	X	
Z	St. Louis: Hazelwood, MO	X	

Sequential Vehicle Identifiers
(VIN Positions 12 through 17)
Trucks, MPVs, buses and incomplete vehicles:

A six-digit alphanumeric sequence code (first digit alpha, last five digits numeric) is assigned for trucks, MPVs, and incomplete vehicles. For Nissan-badged vehicles, a six-digit numerical sequence has been assigned.

METRIC/U.S. CUSTOMARY UNIT EQUIVALENTS

2003
MODEL YEAR

Multiply:		by:		to get:	Multiply:		by:		to get:
LINEAR									
inches	X	25.4	=	millimetres(mm)		X	0.03937	=	inches
inches	X	2.54	=	centimetres (cm)		X	0.3937	=	inches
feet	X	0.3048	=	metres (m)		X	3.281	=	feet
AREA									
inches^2	X	645.16	=	millimetres^2 (mm^2)		X	0.00155	=	inches^2
inches^2	X	6.452	=	centimetres^2 (cm^2)		X	0.155	=	inches^2
feet^2	X	0.0929	=	metres^2 (m^2)		X	10.764	=	feet^2
VOLUME									
inches^3	X	16387.0	=	millimetres^3 (mm^3)		X	0.000061	=	inches^3
inches^3	X	16.387	=	centimetres^3 (cm^3)		X	0.06102	=	inches^3
inches^3	X	0.01639	=	litres (1)		X	61.024	=	inches^3
quarts	X	0.94635	=	litres (1)		X	1.0567	=	quarts
gallons	X	3.7854	=	litres (1)		X	0.2642	=	gallons
feet^3	X	28.317	=	litres (1)		X	0.03531	=	feet^3
feet^3	X	0.02832	=	metres^3 (m^3)		X	35.315	=	feet^3
fluid oz.	X	29.57	=	millilitres (ml)		X	0.03382	=	fluid oz.
MASS									
ounces (av)	X	28.35	=	grams (g)		X	0.03527	=	ounces (av)
lb (av)	X	0.4536	=	kilograms (kg)		X	2.2046	=	lb (av)
tons (2000 lb)	X	907.18	=	kilograms (kg)		X	0.001102	=	tons (2000 lb)
tons (2000 lb)	X	0.9078	=	tonne (t)		X	1.1025	=	tons (2000 lb)

Multiply:		by:		to get:	Multiply:		by:		to get:
FUEL ECONOMY									
miles/gal	X	0.4251	=	kilometres/litre (km/l)		X	2.352	=	miles/gal
gal/mile	X	2.3524	=	litres/kilometre (l/km)		X	0.42517	=	gal/mile
gal/mile	X	235.24	=	litres/100 kilometre (l/km)		X	0.004252	=	gal/mile
POWER									
horsepower	X	0.746	=	kilowatts (kW)		X	1.34	=	horsepower
ft-lb/min	X	0.0226	=	watts(W)		X	44.27	=	ft-lbf/min
TORQUE									
lb-in	X	0.11298	=	newton-metres (N-m)		X	8.851	=	lb-in
lb-feet	X	1.3558	=	newton-metres (N-m)		X	0.7376	=	lb-feet
VELOCITY									
miles/hr	X	1.6093	=	kilometres/hr (km/hr)		X	0.6214	=	miles/hr
kilometres/hr	X	0.27778	=	metres/sec (m/s)		X	3.600	=	kilometres/hr
miles/hr	X	0.4470	=	metres/sec (m/s)		X	2.237	=	miles/hr

COMMON METRIC PREFIXES

mega	(M)	=	1,000,000	centi	(c)	=	0.01
kilo	(k)	=	1,000	milli	(m)	=	0.001
hecto	(h)	=	100	micro	(μ)	=	0.000001

The following definitions are from the Title 49, Code of Federal Regulations, Section 571.3 except where noted. Canadian definitions are from Canada Motor Vehicle Safety Regulations, Section 2(1), and are in italics. Ford Motor Company definitions are for the purpose of this publication only. Some terms are followed by an abbreviation that is used throughout this publication.

Ambulance — is a vehicle for emergency medical care which provides:
A driver's compartment; a patient compartment to accommodate an Emergency Medical Technician (EMT)/Paramedic and two litter patients (one patient on the primary cot and a secondary patient on a folding litter located on the squad bench) so positioned that the primary patient can be given intensive life support during transit; equipment and supplies for emergency care at the scene as well as during transport; two-way radio communicaion; and, when necessary, equipment for light rescue/extrication procedures. The Ambulance shall be designed and constructed to afford safety, comfort and avoid aggravation of the patient's injury or illness. (From Federal Specification KKA-1822-D). Ford Motor Company also includes within its definition of ambulance, "any vehicle that is used for transporting life-supported equipment, for rescue operations, or for non-emergency patient transfer if the engine of the vehicle is equipped with a "throttle kicker" device, which enables an operator to increase engine speed over normal idle speed when the vehicle is not moving."

Auto Transporter — means a truck and a trailer designed for use in combination to transport motor vehicles where the truck is designed to carry cargo other than at the fifth wheel and that cargo is to be loaded only by means of the trailer.

B-Pillar — is the vehicle body structure located directly rearward of each front door. This structure will include the outer panel, all inner panels or reinforcements which support the door opening, the door latching system and/or the roof structure (source: Ford Motor Company).

Bus — a motor vehicle with motive power, except a trailer, designed for carrying more than 10 persons.

***Bus (Canada)** — a vehicle having a designated seating capacity of more than 10, but does not include a trailer or a vehicle imported temporarily for special purposes.*

Chassis Cab — an incomplete vehicle, with completed occupant compartment, that requires only the addition of cargo-carrying, work-performing or lead-bearing components to perform its intended functions. (From Title 49 CFR, Section 567.3)

Completed Vehicle — means a vehicle that requires no further manufacturing operations to perform its intended function other than the addition of readily attachable components, such as mirrors or tire and rim assemblies, or minor finishing operations such as painting.

Completed Vehicle Alterer — as used in this book means a person who alters a vehicle that has previously been certified in accordance with Section 567.4 or 567.5 of Title 49 Code of Federal Regulations other than by the addition, substitution or removal of readily attachable components such as mirrors or tire and rim assemblies, or minor finishing operations such as painting, or who alters the vehicle in such a manner that its stated weight ratings are no longer valid, before the first purchase of the vehicle in good faith for purposes other than resale.

Critical Control Item — is a component or procedure which may affect compliance with a federal regulation or, which could directly affect the safe operation of the vehicle. ∇ is the identifying symbol. (source: Ford Motor Company)

Dealer — means any person who is engaged in the sale and distribution of new motor vehicles or motor vehicle equipment primarily to purchasers who is good faith purchase any such vehicle or equipment for purposes other than resale.

Designated Seating Position — any plan view location capable of accommodating a person at least as large as a 5th percentile adult female if the overall seat configuration and design and vehicle design is such that the position is likely to be used as a seating position while the vehicle is in motion, except for auxiliary seating accommodations such as temporary or folding jump seats. Any bench or split-bench seat in passenger car, truck or multipurpose passenger vehicle with a GVWR less than 10,000 pounds, having greater than 50 inches of hip room (measured in accordance with SAE Standard J1100(a) shall have not less than three designated seating positions, unless the seat design or vehicle design is such that the center position cannot be used for seating.

***Designated Seating Position (Canada)** — any plan view position capable of accommodating a person at least as large as a 5th percentile adult female, as defined in section 100 of Schedule IV, where the overall seat configuration and design and the vehicle design are such that the position is likely to be used as a seating position while the vehicle is in motion, but does not include any plan view position of temporary or folding jump seats or other auxiliary seating accommodation.*

Final-Stage Manufacturer — a person who performs such manufacturing operations on an incomplete vehicle that it becomes a completed vehicle. (49 CFR, Section 568.3)

Forward Control — a vehicle configuration in which more than half of the engine length is rearward of the foremost point of the windshield base and the steering wheel hub is in the forward quarter of the vehicle length.

Gross Axle Weight Rating (GAWR) — the value specified by the vehicle manufacturer as the load carrying capacity of a single axle system as measured at the tire-ground interfaces.

Gross Combination Weight Rating (GCWR) — the value specified by the manufacturer as the loaded weight of a combination vehicle.

Gross Vehicle Weight Rating (GVWR) — the value specified by the manufacturer as the loaded weight of a single vehicle.

H-Point — the mechanically hinged hip point of a manikin which simulated the actual pivot center of the human torso and thigh, described in SAE Recommended Practice J826, "Manikins For Use in Defining Vehicle Seating Accommodation," November 1962.

***H-Point (Canada)** — the mechanically hinged hip point of a manikin that simulates the actual pivot centre of the human torso and thigh, described in SAE Standard J826 APR80, Devices for Use in Defining and Measuring Vehicle Seating Accomodation.*

Incomplete Vehicle Manufacturer — a person who manufactures an incomplete vehicle by assembling components none of which, taken separately constitute an incomplete vehicle. (49 CFR, Section 568.3)

Intermediate Manufacturer — a person, other than the incomplete vehicle manufacturer or the final stage manufacturer, who performs manufacturing operations on an incomplete vehicle. (49 CFR, Section 568.3)

Incomplete Vehicle — an assemblage consisting, as a minimum, of frame and chassis structure, powertrain, steering system, suspension system and braking system, to the extent that those systems are to be part of the completed vehicle, that requires further manufacturing operations, other than the addition of readily attachable components such as mirrors or tire and rim assemblies, or minor finishing operations, such as painting, to become a completed vehicle.

***Incomplete Vehicle (Canada)** — (a) a vehicle other than a vehicle imported temporarily for special purposes, that is capable of being driven and that consists, at a minimum, of a chassis structure, power train, steering system, suspension system and braking system in the state in which those systems are to be part of the completed vehicle, but requires further manufacturing operations to become a completed vehicle or (b) that is an incomplete trailer; (vehicule incompler)*

The following definitions are from the Title 49, Code of Federal Regulations, Section 571.3 except where noted. Canadian definitions are from Canada Motor Vehicle Safety Regulations, Section 2(1), and are in italics. Ford Motor Company definitions are for the purpose of this publication only. Some terms are followed by an abbreviation that is used throughout this publication.

Manufacturer — means any person engaged in the manufacturing or assembling of motor vehicles or motor vehicle equipment, including any person importing motor vehicles or motor vehicle equipment for resale.

Multipurpose Passenger Vehicle (MPV) — a motor vehicle with motive power, except a trailer, designed to carry 10 persons or less which is constructed either on a truck chassis or with special features for occasional off-road operation, but does not include an air cushion vehicle, all-terrain vehicle, golf-cart, passenger car or truck.

Multipurpose Passenger Vehicle (MPV) (Canada) *— a vehicle having a designated seating capacity of 10 or less that is constructed either on a truck chassis or with special features for occasional off-road operation, but does not include an air cushion vehicle, all-terrain vehicle, a low speed vehicle, a golf cart, a passenger car , a truck or a vehicle imported temporarily for special purposes.*

Prescribed Class (Canada) *— a class of vehicles listed in Schedule III.*

Seating Reference Point — the manufacturer's design reference point which:

(a) Establishes the rearmost normal design driving or riding position of each designated seating position in a vehicle;

(b) Has coordinates established relative to the designated vehicle structure;

(c) Simulates the position of the pivot center of the human torso and thigh; and

(d) Is the reference point employed to position the two dimensional templates described in SAE Recommended Practice J826. "Manikins for Use in Defining Vehicle Seating Accommodation," November, 1962.

Seating Reference Point (Canada) *— the unique design H-Point, as defined in section 2.2.11.1 of SAE Recommended Practice J1100 (June 1993), that:*

(a) Establishes the rearmost normal design driving or riding position of each designated seating position, taking into account all modes of adjustment – horizontal, vertical and tilt – in a vehicle;

(b) Has X, Y and Z coordinates, as defined in section 2.2.3 of SAE REcommended Practice J1100 (June 1993), established relative to the designated vehicle structure;

(c) Simulates the position of the pivot center of the human torso and thigh; and

(d) Is the reference point employed to position the H-Point template with the 95th percentile leg, as described in section 3.1 of SAE Standard J826 (June 1992), or, if that drafting template cannot be positioned, the reference point when the seat is in its rearmost adjustment position.

School Bus — a bus that is sold, or introduced in interstate commerce, for purposes that include carrying students to and from school or related events, but does not include a bus designed and sold for operation as a common carrier in urban transportation.

School Bus (Canada) *— a bus designed or equipped primarily to carry students to and from school.*

Second Unit Body (SUB) — consists of the body structure and/or all the cargo carrying, work performing, and/or lead bearing components and/or equipment installed by a subsequent stage manufacturer on an incomplete vehicle, such that the incomplete vehicle becomes a completed vehicle. (source: Ford Motor Company)

Subsequent Stage Manufacturer — is a term which means either intermediate or final stage manufacturers or both. (source: Ford Motor Company)

Trimmed Seat — a complete functional seat assembly including the seat pedestal, seat track, seat base frame, seat back, recliner mechanism, seat padding, all attaching hardware and the final trim material) i.e., cloth, leather or vinyl). (source: Ford Motor Company)

Truck — a motor vehicle with motive power, except a trailer, designed primarily for the transportation of property or special purpose equipment.

Truck (Canada) *— a truck designed primarily for the transportation of property or special purpose equipment but does not include a competition vehicle, a crawler mounted vehicle, a trailer, a work vehicle, a vehicle imported temporarily for special purposes or a vehicle designed for operation exclusively off-road; (camion).*

Truck Tractor — a truck designed primarily for drawing other motor vehicles and not so constructed as to carry a load other than a part of the weight of the vehicle and the load so drawn.

Truck Tractor (Canada) *— a truck designed primarily for drawing other vehicles and not constructed for carrying any load other than part of the weight of the vehicles and load drawn, and includes a vehicle designed to accept a fifth-wheel coupling but does not include a crane-equipped breakdown vehicle.*

Unloaded Vehicle Weight (UVW) — the weight of a vehicle with maximum capacity of all fluids necessary for operation of the vehicle, but without cargo, occupants, or accessories that are ordinarily removed from the vehicle when it is not in use.

Unloaded Vehicle Weight (UVW) (Canada) *— the weight of a vehicle equipped with containers for the fluids necessary for the operation of the vehicle filled to their maximum capacity but without cargo or occupants.*

Untrimmed Seat — the structure including the seat pedestal, seat track, seat base frame, seat back, recliner mechanism, seat padding and all attaching hardware required for a functional seat assembly without the final trim material (e.g., cloth, leather or vinyl) and tim material attaching components. (source: Ford Motor Company)

Walk-In Van — is a step entry city delivery van type vehicle that permits a person to enter the vehicle without stooping. This definition by Ford Motor Company is based on information appearing in 41 FR 54945, published December 16, 1976, and in 42 FR 34288, published July 5, 1977.

Walk-In Van (Canada) *— a van type of truck in which a person having a height of 1 700 mm can enter the occupant compartment in an upright position by a front door.*

GUIDELINES FOR INSTALLATION OF ALTERNATIVE FUEL SYSTEMS ON GASOLINE VEHICLES

INTRODUCTION

Ford recommends purchasing a Ford produced Alternative Fuel Vehicle if possible. If a Ford Alternative Fuel Vehicle is not available to meet your requirements the following guidelines are intended to assist manufacturers that modify or alter Ford light truck products to Alternative Fuel Vehicles (AFVs), either dedicated gaseous fuel systems or a combination unleaded gasoline/gaseous fuel "bi-fuel" systems. Both Compressed Natural Gas (CNG) and Liquefied Petroleum Gas or Propane (LPG) are included in the term gaseous fuels. These guidelines are based on analysis of components, vehicle tests, actual service situations and engineering judgment. Disregard of these guidelines may affect the durability, reliability, handling and performance characteristics of the vehicle, may elevate the underbody temperature and/or increase the potential for fire, and may affect the safety of the vehicle occupants in the event of an accident.

For information concerning labeling of complete or incomplete vehicles as manufactured by Ford Motor Company, see the U.S. & Canada Safety Standards section of this book.

Since gaseous fuel vehicles may take many forms, these recommendations are not comprehensive and may not be universally applicable. Strict adherence to these guidelines will not ensure compliance to applicable safety or emission regulations. The final stage manufacturer or alterer is responsible for compliance with safety or emission regulations which are affected by AFV modifications. Accordingly, Ford Motor Company makes no representation as to the appropriateness of any particular recommendation in its application to a particular design or act of a subsequent stage manufacturer or alterer.

To verify compliance to an applicable regulation, testing of representative vehicles may be necessary. New vehicles equipped with CNG may need to meet FMVSS 303 and FMVSS 304 or CMVSS 301.2. New vehicles equipped with LPG will need to meet CMVSS 301.1 in Canada. Questions regarding compliance to applicable regulations should be directed to your legal counsel, the National Highway Traffic Safety Administration, Transport Canada, the Environmental Protection Agency, the California Air Resources Board (CARB), or any other state/provincial emission certification activity, as appropriate.

Some states have certification and installation procedures defined for alternative fuel conversions that may require chassis roll emission testing obtaining an assigned deterioration factor for emission components, an in-use compliance plan (recall), etc. This includes the "California Certification and Installation Procedures for Alternative Fuel Retrofit Systems for Motor Vehicles Certified for 1994 and Subsequent Model Years," EPA's "Exemption of Aftermarket Conversion From Tampering Prohibition" under Subpart F, 4OCFR85, or EPA's Tampering Prohibition. EPA's Small Volume Manufacturer's procedure can apply if sales volume is 10,000 units or less in a given calendar year.

Prior to vehicle modification or alteration, a subsequent stage manufacturer or alterer should consider the following:

- Weight ratings and distribution
- Adequate ground clearance, approach and departure angles and ramp breakover clearance
- Appropriate component clearances
- Serviceability
- Service network
- Service manuals
- *Emissions Warranty Booklet*

After installing an alternative fuel system on a new vehicle, a label may be required to disclose vehicle range when operating on the alternative fuel per 16 CFR Part 309.

ALTERING COMPLETED VEHICLES

Any person or company who, prior to the first retail sale, alters a vehicle certified as complying with applicable Federal Motor Vehicle Safety Standards (FMVSS) or Canadian Motor Safety Standards (CMVSS) must comply with section 567.7 of Title 49, Code of Federal Regulations, entitled "Requirements for Persons Who Alter Certified Vehicles" or Section 7.1 of the Canadian Motor Vehicle Safety Regulations, respectively.

In general, you must:

- Retain the original certification label on the vehicle
- Determine whether the vehicle, as altered, conforms to all applicable Federal Motor Vehicle Safety Standards, and if it does
- Not exceed weight as noted below
- Affix to the vehicle an altered vehicle certification label

OTHER GENERAL NOTES

- Conversions should be done in accordance with all applicable federal, state, provincial or local regulations; the 1998 Edition of the National Fire Protection Association (NFPA) Standard No. 52 or 58, as applicable (Standard for CNG Vehicular Fuel Systems" or "Standard for the Storage and Handling of LPG"); the National Standard of Canada CAN/CGA-12.3-M91, entitled "Fuel System Components for Natural Gas Powered Vehicles"; CSA B51 and CAN/CGA B149.5 for LPG systems, the American Gas Association (AGA) standards, and Compressed Gas Association (CGA) standards.
- Maintain clearances for all components as specified in NFPA 52/58, CAN/CGA-1 2.3-M91 and AGA standards.
- Verify the function and integrity of any modified or altered Ford component.

WEIGHT DISTRIBUTION

Ford truck products include both completed vehicles and incomplete vehicles. A vehicle may not exceed the GVWR or front or rear GAWRs including projected payloads, all fluids and fuels filled to capacity, and designated passenger load. Equipment added to a completed vehicle 10,000 lb GVWR or less may not exceed the Accessory Reserve Capacity (ARC) as defined on page 53 of this section. Incomplete vehicles may not be completed to exceed the Unloaded Vehicle Weight (UVW) as defined in the Definitions section of the *Incomplete Vehicle Manual*.

HEAT MANAGEMENT

Refer to Design Recommendations – Underbody Heat Management section, Page 218, of this book.

BODY AND GAGING

- Ford fuel gages are equipped with an anti-slosh module that may affect the accuracy of the converted fuel gage.
- Any hole added to the body should be grommeted and sealed.
- Instrumentation or controls added must comply with F/CMVSS 101.

FRAME

- Additional components added to frame such as tanks and brackets may degrade frame performance. The modifications should be evaluated by testing or analysis.
- See also Design Recommendations – Frame section, page 233, of this book.

COOLING

- Modifications to engine coolant system (e.g., for pressure regulator heating) may affect compliance with F/CMVSS 103 (Windshield Defrost & Defog/ MPV, Truck, Bus).
- See also Design Recommendations – Cooling System section, page 230, of this book.

GUIDELINES FOR INSTALLATION OF ALTERNATIVE FUEL SYSTEMS ON GASOLINE VEHICLES

ENGINE/EMISSIONS

Basic Engine

- Use of gaseous fuel in engines without upgraded internal components (e.g., valve seat inserts, upgraded valve material, etc.) may lead to high mileage durability issues, such as valve seat recession, that are not covered under warranty.
- Improper installation of gaseous fuel hardware may affect gasoline engine function.
- Do not use silicon-based materials for gaskets or adhesives to attach components since this material is not intended as an adhesive and if used as a gasket may “poison’ the HEGO sensor.
- Do not extend existing vehicle maintenance service intervals (e.g., oil changes, spark plugs).
- Unique gaseous fuel components must have durability equivalent to gasoline components.

Electronic Control

- Use electric wiring practices as described in the Electrical Wiring section of this book.
- Fuel system should have self-test capability for input/output (On Board Diagnostics-II).
- As part of checking the modifications, verify that Ford self-test systems (OBD-II) are unaffected.
- Do not force engine control system into “open loop” by altering engine coolant temperature signal as this may cause electric cooling fan to not operate properly, causing engine damage.
- Do not use the “power take-off” wire to avoid illumination of the check-engine light.
- Gasoline should not remain un-circulated for extended periods (over 60 days) since this may clog the engine fuel injectors.
- The electric gasoline fuel pump must not run while operating on the alternative fuel.

Fuel Metering

- Impurities in natural gas may necessitate the need for a coalescer/filter.
- Regulator performance is affected by water content. Adequate heating must be used to prevent fuel freeze-up under normal operating conditions.
- Improper cylinder-to-cylinder air-fuel ratio distribution could affect catalyst/engine durability.
- Gaseous fuel systems should be capable of reliable operation at ambient conditions of –40° F to + 120° F, barometric pressure of sea level to 14,000 feet, and have start times less than or equal to the following:

Time	Temperature
12 sec	–20° F to –0° F
6 sec	0° F to 31° F
1 sec	32° F to 120° F

Emissions

- Any conversion made to the vehicle must comply with the applicable Federal and California Emission regulations including EPA’s Tampering Prohibition (See EPA Mobile Source Enforcement Memorandum 1A and Addendum thereto as revised at 63 FR 32878) or obtain an “Exemption of Aftermarket from Tampering Prohibition” under Subpart F, 40CFR85. For California, please refer to the “California Certification and Installation Procedures for Alternative Fuel Retrofit Systems for Motor Vehicles certified for 1994 and subsequent model years.”
- Gaseous fuel system should be emission tested to verify compliance with applicable emission regulations.
- In a bi-fuel system, installation of the gaseous fuel system must not interfere with vehicle operation on gasoline.
- Gaseous fuel system calibration should be tamper proof.
- Ozone Depletion Substances (ODS) – Refer to Emission Control Information section of this book on pages 44-47.

Safety

- Fuel metering system should provide a mechanism to prevent backfires in the intake manifold on start-up.
- Do not leave gasoline fuel pump or fuel injectors engaged during operation of the engine on gaseous fuel. This could result in decomposition of fuel, elevated fuel temperatures, fuel over pressurization and the risk of fuel expulsion and fire. Also, this could allow the electrically powered gasoline fuel pump to overheat if run with no gasoline in tank.
- Do not leave gasoline in vehicle for extended periods (60 days or more), gasoline may deteriorate due to oxidation. This can damage rubber and other polymeric materials in the fuel systems such as fuel pressure regulator diaphragms. It may also clog small orifices. Recirculating gasoline through fuel rail during prolonged gaseous fuel operation accelerates the deterioration of the gasoline. Refer to New Vehicle Storage Guidelines, Fuel System section, page 235 of this book, for gasoline fuel stabilizer suggestions.

SUSPENSION AND STEERING

Refer to Design Recommendations – Suspension and Steering System section, page 232, of this book.

TRANSMISSION

Refer to Design Recommendations – Transmission section, page 233, of this book.

EXHAUST

Refer to Design Recommendations – Exhaust System section, page 231, of this book.

FUEL SYSTEM

WARNING:

VEHICLES WITH EFI ENGINES HAVE PRESSURIZED FUEL SYSTEMS. THIS PRESSURE MUST BE RELIEVED PRIOR TO SERVICING, LOOSENING OR REMOVING ANY FUEL SYSTEM COMPONENT BY FOLLOWING THE INSTRUCITONS IN THE FORD TRUCK SHOP MANUAL FOR THE APPROPRIATE MODEL AND MODEL YEAR.
WHEN WELDING NEAR FUEL SYSTEM COMPONENTS, ALL METALLIC COMPONENTS SHOULD BE ADEQUATELY SHIELDED AND PROTECTED FROM HEAT OR WELD SPATTER. ALL ADJACENT NON-METALLIC COMPONENTS SHOULD BE REMOVED BEFORE WELDING. REMOVAL OR REINSTALLATION OF ANY FORD FUEL SYSTEM COMPONENT SHOULD BE PERFORMED TO THE SPECIFICATIONS AND INSTRUCTIONS FOUND IN THE *FORD TRUCK SHOP MANUAL* FOR THE APPROPRIATE MODEL AND MODEL YEAR.

Fuel Tanks

- It is recommended that you do not modify the Ford gasoline or alternative fuel tank system.
- Gaseous fuel tanks must meet FMVSS 304 and any applicable state, provincial, and local regulations.
- Performance of a gaseous fuel tank during an impact or accident should be considered when selecting the type and strength of the tank and the location and means of mounting.
- New Gaseous Fuel Tanks – lines or tubing connected to the tank should be flexible to permit small movements of the tank relative to fixed mounting surfaces and to help prevent rupture or disconnection of such lines or tubing during an impact or accident.
- New Fuel Tanks – generally, the tank should be located below the floor of the vehicle and inside its frame rails.
- New Fuel Tanks – clearance between the tank and surrounding components should be provided. Rigid or sharp components close to the tank should be shielded to prevent contact with the tank.
- Tank valves should comply with CGA standards and should be appropriately shielded to protect from road hazards. Valve materials should be compatible with tank to prevent galvanic corrosion.
- Isolate tank, valve, and Pressure Relief Device (PRD) away from heat sources or shield adequately. (See Design Recommendations – Heat Management section of this book.)
- Fuel tanks should not be re-painted.

Retention

- See also Design Recommendations – Fuel System, New Fuel Tank Retention Systems section, page 227, of this book.
- Refer to AGA or fuel tank manufacturer for guidelines (for general overall vehicle).
- Body sheet metal retention systems should be adequately reinforced to accommodate the weight of the fuel system and fuel as specified in NFPA-52/58 and CAN/CGA-1 2.3-M91.
- System fasteners and attachments should be designed to help retain the tank during an impact or accident.

GUIDELINES FOR INSTALLATION OF ALTERNATIVE FUEL SYSTEMS ON GASOLINE VEHICLES

FUEL SYSTEM (continued)

Fuel Fill System

- Fill system should have some flexibility to help prevent rupture or disconnection resulting from movement of the fuel fill area relative to the remainder of the vehicle in an impact or accident.
- Any appliance or hardware attachments to the body in the area of a fuel system component should be designated, positioned and secured to help prevent damage to such a component during an impact or accident.
- The fuel fill receptacle should be recessed, capped, and when installed should be within the normal body plane.
- Check the fuel filler opening area of the body, as shown in Figure A, Design Recommendations – Fuel Fill System section, page 227, of this book for adequate sealing from the vehicle interior because holes or cracks in this area may allow fuel vapors to enter the vehicle interior. Openings should be sealed with a product which is fuel resistant.
- Whenever possible, the fill system should pass under the body rather than through it. Where passing through floors and sides, the fill system should be shielded and have adequate clearance to surrounding structure.
- Be sure that the fuel filler cap is the correct designated part. Provide adequate hand clearance for cap installation and correct sealing of the cap to fill receptacle.
- When installing accessories or equipment, avoid exposing fuel lines to surfaces with sharp edges, or to high temperature surfaces (near hot exhaust or coolant) as shown in Figure A, Design Recommendations – Fuel Fill System section, page 228, of this book. Also, avoid installations which result in the exposure of these lines to road debris and/or undercoating.
- Do not place adjacent hardware such that it may cut or otherwise damage the filler neck and vent hoses and cause fuel leakage.
- The fuel filler line must be clear of moving suspension components to help prevent abrasion which could result in fuel leakage.
- Ford recommends CNG fuel receptacle meet ANSI/AGA NGV1 requirements.
- The receptacle must be packaged to accept available refueling nozzles.

Do not route fuel filler line near sharp or jagged surfaces. Also, avoid kinked fuel filler line due to improper routing.

Fuel Line/Hoses/Tubes

- NFPA 52/58, CAN/CGA-1 2.3-M91 and AGA 1-85 criteria should be followed.
- Do not reroute or change the attachments of gasoline fuel lines or fuel vapor hoses. Doing so may affect the vehicles's ability to comply with F/CMVSS 301 Fuel System Integrity, and may adversely affect vehicle performance by increasing the amount of heat absorbed by the fuel system or restricting its venting.
- Tubes and lines should be routed away from and not attached to members likely to move during normal vehicle operation or to deform most in the event f an impact or accident.
- Tubes and lines should be flexible to help avoid rupture or disconnection resulting from movement of the engine relative to the frame during an impact or accident.
- Tubes and lines should be routed away from hot regions and sharp objects, and should be retained adequately to prevent movement into such regions or against such objects.
- Do not add fuel or vapor line flow restrictors as they can cause engine fuel starvation or abnormally light fuel tank pressures.
- If the push connectors on OEM nylon gasoline lines are disconnected, they must be reconnected and the retention clip must be discarded and replaced with a new clip.
- The special removal tool must be used to open push connectors installed on OEM steel gasoline lines if the lines need to be disconnected. The tool is available from Ford Parts and Service Division.
- The push connectors on OEM steel gasoline lines, if disconnected, must be reconnected by snapping them back into position and installing the appropriate retainer.
- Avoid pinching or kinking of any fuel vapor hose as shown in Figure B, Design REcommendations – Fuel Fill System section, page 228, of this book.
- Each of the fuel lines and fuel vapor hose retention clips provided by Ford must be used in original factory locations to prevent misplacement or movement of the lines.
- Fuel filters installed in the fuel supply line must be of sufficient size to permit adequate fuel flow and placed so as to help reduce exposure to exhaust heat and physical damage. Ford replacement fuel filters are recommended for the gasoline system. Filters are not to be installed in the fuel return line.
- Fuel system components which are disconnected during manufacturing should be capped or plugged promptly to prevent possible contamination.

Valves and Fittings

- Must be leak-free under normal vehicle vibration modes, line pressures and temperatures.
- Material must be compatible with interfacing components.
- Consider serviceability when selecting fitting type & packaging.

Pressure Regulator

- Must be packaged in an area which is:
  - Serviceable
  - Protected from road hazards and jacking
  - Protected during crash situations
- Must not restrict airflow through the radiator

ELECTRICAL

- Electrical connections exposed to the elements should be appropriately protected.
- Refer to *Ford Electrical Trouble Shooting Guide* for each model to resolve electrical concerns. Publications are available from Helm Incorporated, call 1-800-782-4356.

LPG Conversions

Conversions of Ford gasoline engines into LPG engines should be made by reputable and qualified distributors of LPG equipment in accordance with applicable Canadian, U.S. Federal, State, provincial, and local laws and regulations. LPG is a regulated emission in California and requires a California Executive Order for engine sales in California. Engines that are converted to operate on LPG should be run only on LPG fuels specifically designated for motor use. Operators of LPG-fueled vehicles should obtain from the organization that performed the conversion, written instructions for operating the engine and its LPG fuel system, including any precautions applicable to such operation. It is very important that these instructions be followed carefully and completely.

In the United States, regulations issued by the U.S. Federal Highway Administration (see, for example, 49 CFR Part 393.65 and 393.69) and State and local laws and regulations may require installation of special equipment depending on the particular uses intended for the vehicles. A number of state and local governments require the fuel systems of LPG-fueled vehicles to meet standards that often are based on some version of National Fire Protection Association (NFPA) Standard NO. 58, entitled "Standard for the Storage and Handling of Liquefied Petroleum Gases."

GUIDELINES FOR SECOND UNIT BODY INSTALLATION ON FORD PRODUCED DEDICATED NATURAL GAS VEHICLE (NGV) E-SERIES CUTAWAY/CHASSIS CAB

Ford produces a Super Duty Cutaway/Chassis Cab Dedicated Natural Gas Vehicle (NGV), which comes from the factory capable of running on Compressed Natural Gas (CNG).

The vehicle is equipped with a 3-tank CNG fuel system, which consists of one midship tank and two aft-of-axle tanks.

When installing a Second Unit Body (SUB), the precautions and instructions as described on these pages must be followed, as well as pages 24-26.

- The body shall provide adequate strength and anti-deformation characteristics to withstand NGV-1 breakaway force from the fill station with no vehicle fuel system leakage.

Definition of a Dedicated NGV: Vehicle operates on CNG fuel only, no gasoline on board. The engine has upgraded components or enhanced durability while operating on the gaseous fuel.

- Removing, detaching or altering any component of the CNG fuel system should only be done by an authorized Ford Dealer, properly Ford trained personnel or Ford Alliance Partner.
- Do not weld on CNG tanks or attachment brackets.
- If it is necessary to place the vehicle in a paint-curing oven to cure paint on a SUB, all the fuel from the CNG system (tanks, lines, etc.) must be removed prior to curing. The vehicle and it's components should not be subjected to temperatures in excess of 180 ambient degrees F.
- Do not pressurize the fuel system with anything but nitrogen or natural gas.

The vehicle must adhere to the same requirements and criteria as the gasoline E-450 Cutaway/Chassis Cab unless otherwise stated in the E-450 Cutaway/Chassis Cab NGV portion of this publication or in the *Ford Alternative Fuel Alliance (FAFA-2000) Gaseous Fuel Guidelines.*

A copy of the *FAFA-2000 Gaseous Fuel Guidelines* can be obtained by calling 1-800-34-FLEET.

Clearance from transmission mounted parking brake equalizer: "A minimum of 25.4 mm [1.0 in] clearance is required between any part of the fuel system and the parking brake equalizer."

Installation of Ford approved in-body tank kit:

- Any tanks that are added by the SUB installer must utilize the inertia switch and have a solenoid activated tank valve.
- Underbody or cargo area tanks must be shielded. Shields must have drain holes.
- If tanks are mounted inside the vehicle, the tank neck and all connections must be enclosed in a gas tight housing and be vented outside the vehicle.
- Tanks must meet (NGV2-98) requirements for Type 1 or Type 2 only. Type 3 and Type 4 tanks are not allowed.

The subsequent stage manufacturer is responsible for ensuring that all applicable requirements are met, including Federal/Canadian Motor Vehicle Safety Standards (F/CMVSS) regulations. The completed vehicles must be in accordance with all federal, state, provincial and local regulations and industry standards regarding new vehicles including, but not limited to, those issued by:

- National Fire Protection Association (NFPA 52)
- Ford Alternative Fuel Programs (FAFA-2000) Requirements
- *Ford Truck Body Builders Layout Book*
- *Ford Incomplete Vehicle Manual (IVM)*
- *Ford Qualified Vehicle Modifier (QVM) Motor Home and Transit Bus Guide*

  Do not assume that this is a complete list but rather a sample of the many resources that contain the requirements that your vehicle must meet once it is complete.

Fuel lines and tanks must be vented according to the proper fuel venting procedure before tapping into the fuel system.

- Refer to the *Ford Service Manual* for the recommended fuel system venting procedure if required.
- **Warning:** High Pressure Fuel System.
  Service Pressure: 3600 PSI @ 70 F.

The completed weight of any vehicle must not exceed the rated GAWRs or GVWR with full fuel and allowance for passengers and rated cargo.

- The spacers required between the frame and Second Unit Body must be included in the center of gravity and Second Unit Body weight.

The accessory reserve capacity (ARC), or accessory reserve load, of new Ford vehicles must not be exceeded for either the front axle, rear axle and/or total vehicle with the installation of additional gaseous fuel system components.

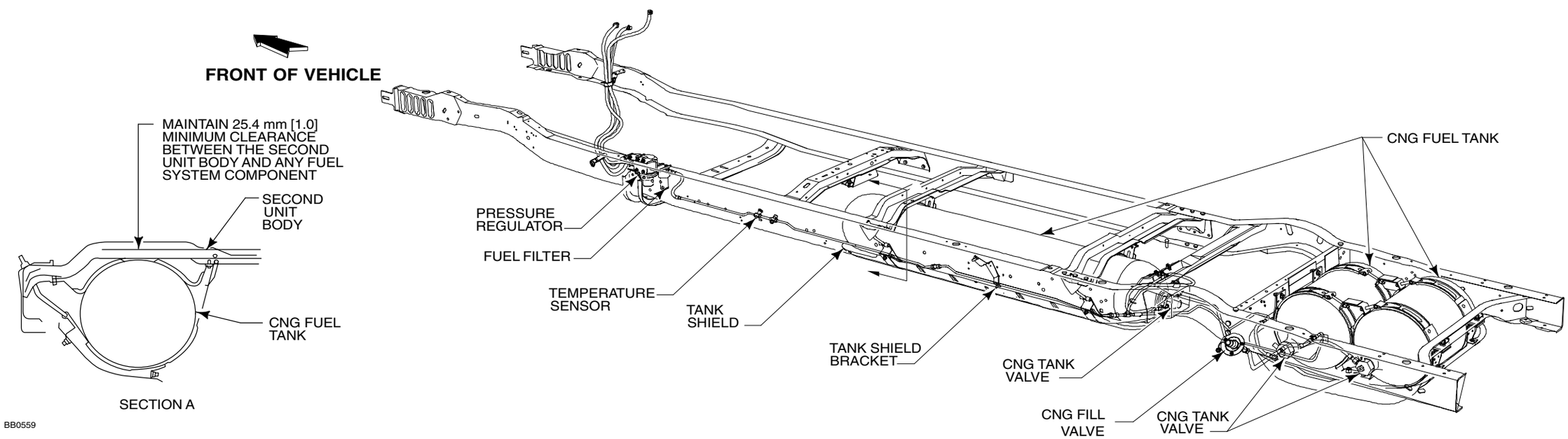

NOTE — [ ] DIMENSIONS ARE INCHES.

GUIDELINES FOR SECOND UNIT BODY INSTALLATION ON FORD PRODUCED DEDICATED NATURAL GAS VEHICLE (NGV) E-SERIES CUTAWAY/CHASSIS CAB

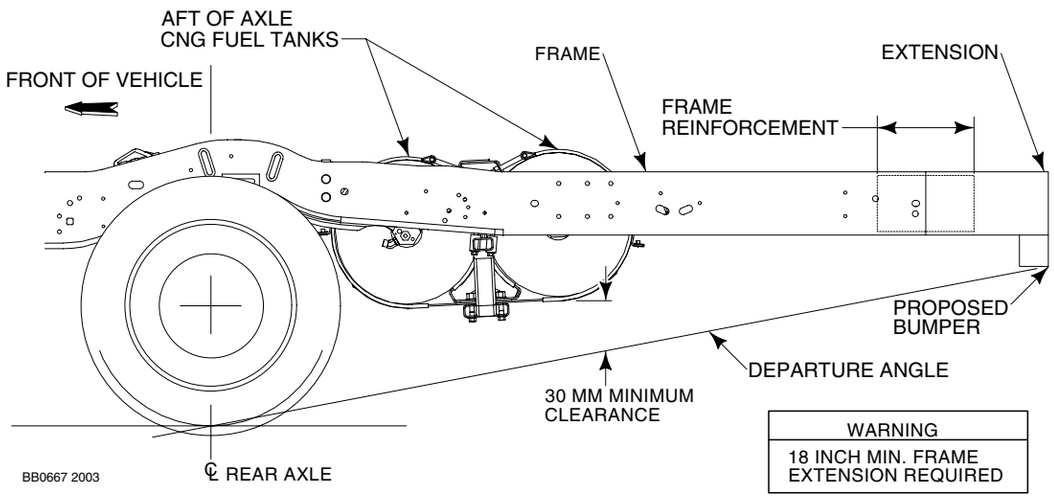

Minimum Ground Clearance (Departure Angle) for Completed Vehicles with Aft Axle CNG Tanks

Any tank and shield package designed to mount under the Ford body must be at least 30 mm above the break-over and departure zones. Take no action which would degrade ground clearance beyond that which is sold and released by Ford Motor Company. Refer to E-350/450 Cutaway/Chassis Cab Truck data 176" WB for Frame Extension dimensional information.

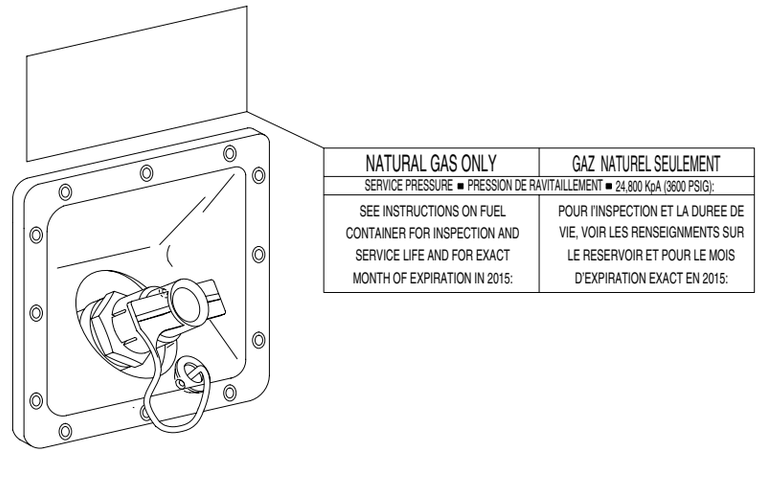

Every vehicle powered by CNG gas must bear a label located at the fueling connection receptacle and shall include the following:
1. Identification as a CNG-fueled vehicle.
2. System service pressure.
3. Container retest date(s) or expiration date.
   (If additional tanks are added to the fuel system, the label must be supplemented to reflect the earliest date of all tanks on the vehicle)

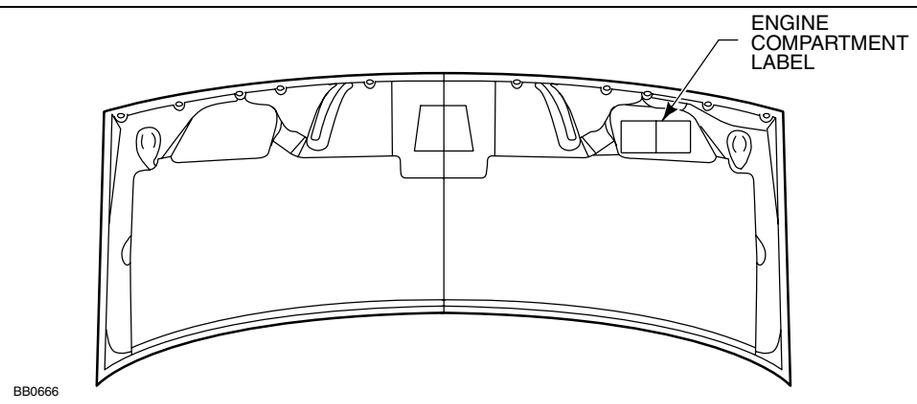

Engine Compartment Label

Every vehicle powered by CNG gas must bear a label located in the engine compartment and shall include the following:
1. Identification as a CNG-fueled vehicle.
2. System service pressure.
3. Installer's name or company.
4. Container retest date(s) or expiration date.
5. Total container water volume in gallons (liters).
   (Label will be affixed under hood upon delivery)

If additional fuel tanks are added to the fuel system, a supplemental sticker must be affixed in this location as well. The supplemental sticker must contain the following:
1. Additional System Volume (added volume and total).
2. Service pressure (must not be altered from 3600 psi @ 70 F).
3. Installer's name or company.

CNG Label

Every vehicle powered by CNG gas must be identified with a weather resistant diamond-shaped label located on an exterior vertical, or near vertical surface, on the lower right rear of the vehicle, inboard from any other markings. The label must not be installed on the bumper. The label shall be approximately 120 mm [4¾ in] long by 893 mm [3¼ in] high. The marking shall consist of a border and the letters "CNG" 25 mm [1 in] minimum height centered in the diamond of silver or white reflective luminous material on a blue background.

SUPER DUTY F-650/750
FIXED GRILLE (FRONT PTO) INSTALLATION

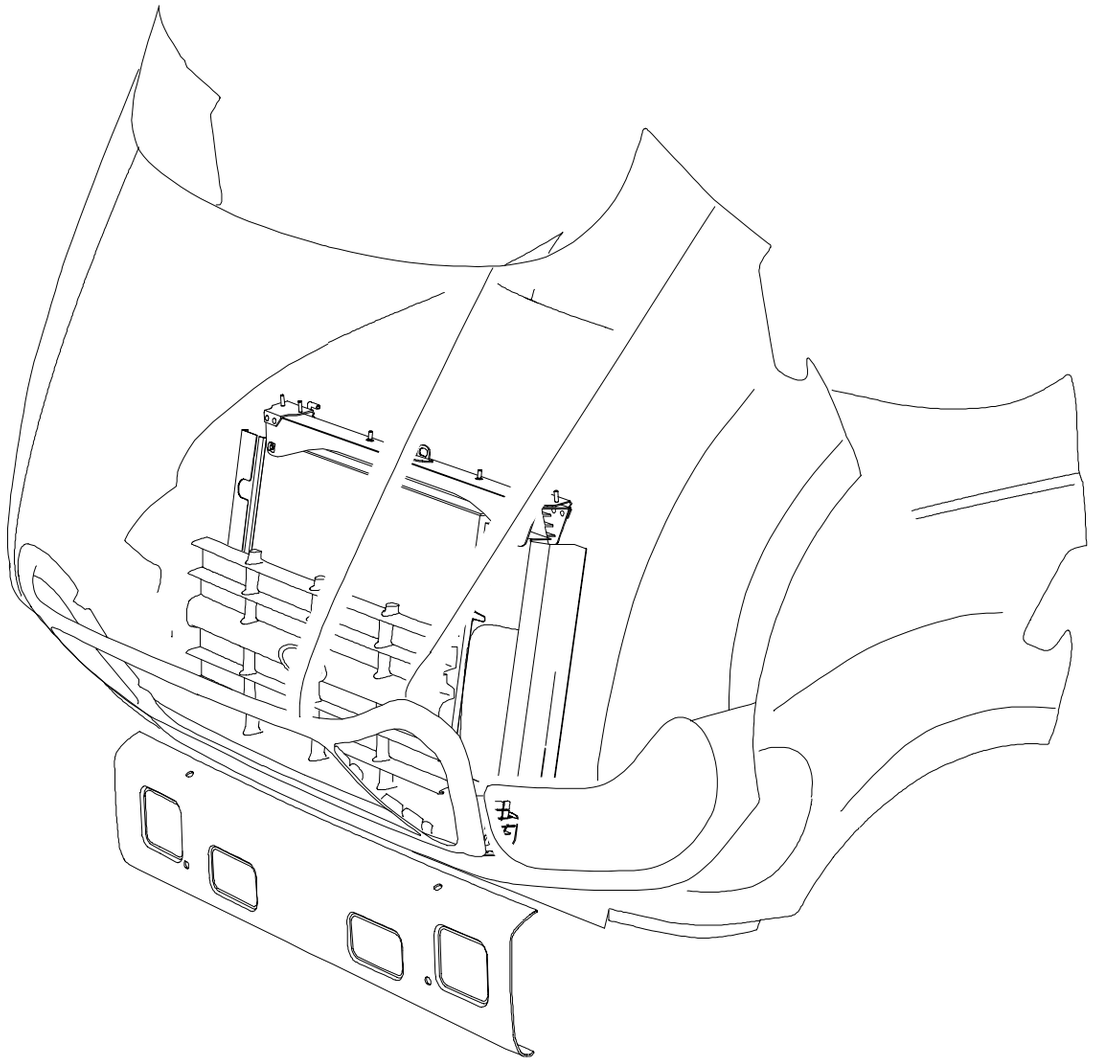

BB0556

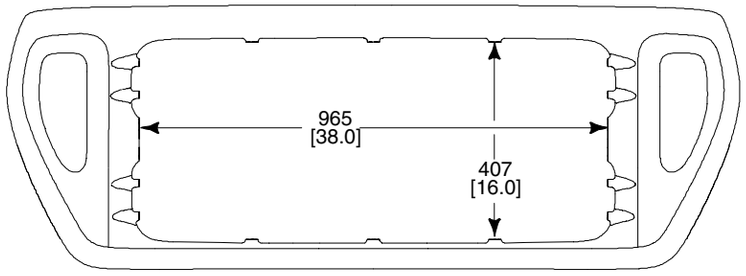

GRILLE OPENING DIMENSIONS FOR
FRONT PTO INSTALLATIONS SEE PAGE 34

NOTE — [ ] DIMENSIONS ARE INCHES.

RANGER
SEAT TRACK TRAVEL/H-POINT LOCATION

DRIVER/FRONT PASSENGER
MANUAL TRACK

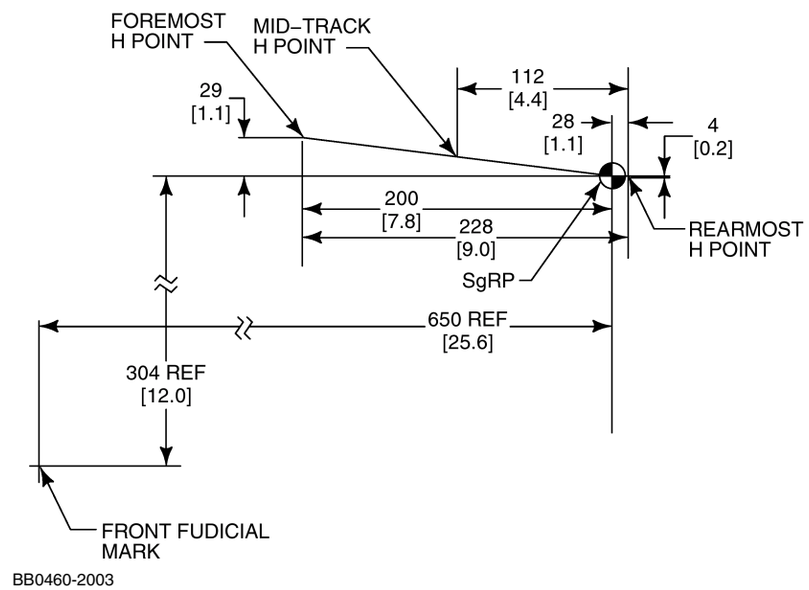

NOTE — [ ] DIMENSIONS ARE INCHES.

E-SERIES
SEAT TRACK TRAVEL/H-POINT LOCATION

DRIVER
POWER TRACK

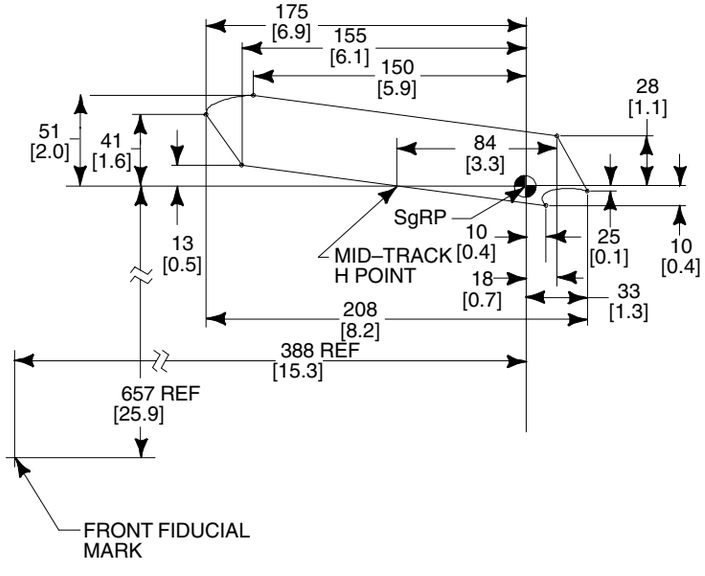

DRIVER
MANUAL TRACK

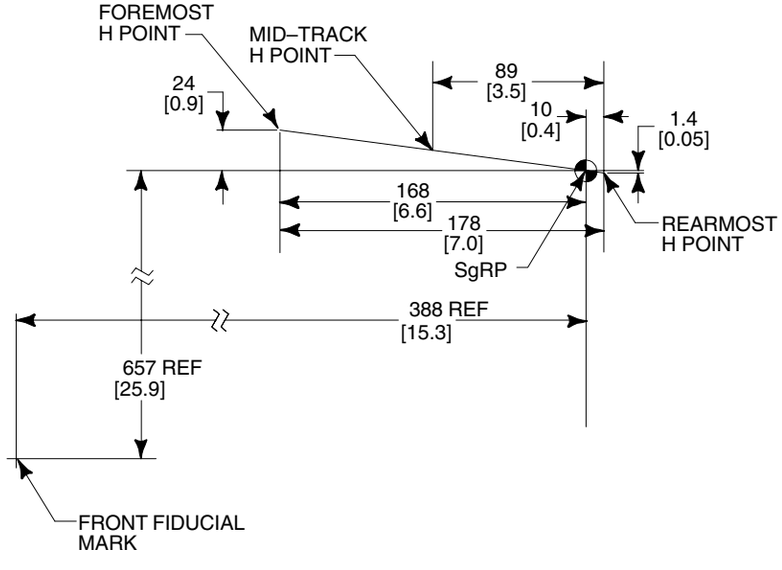

REAR CAPTAIN CHAIR
MANUAL TRACK

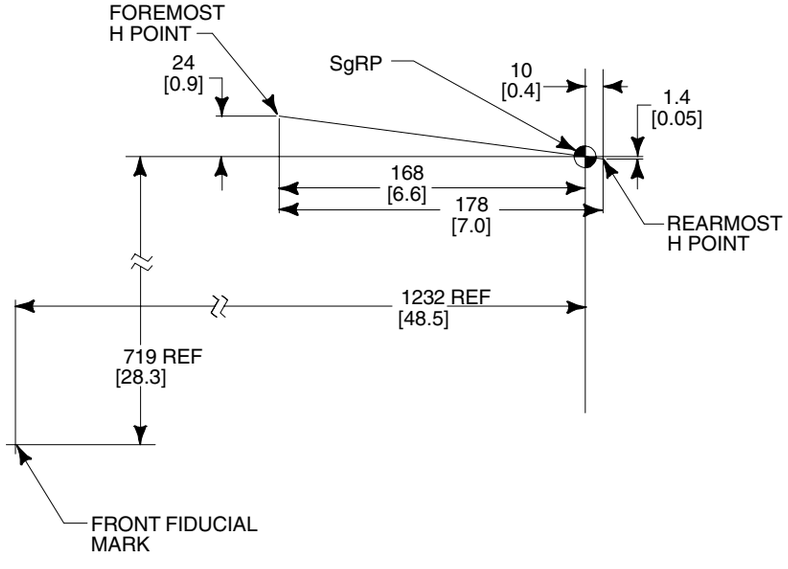

FRONT PASSENGER
MANUAL TRACK

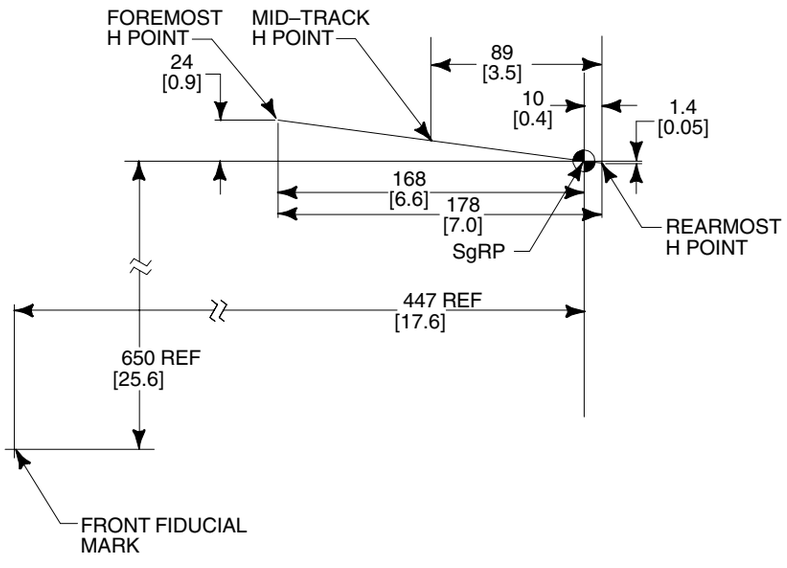

FRONT PASSENGER MANUAL TRACK
FIXED SEAT BACK

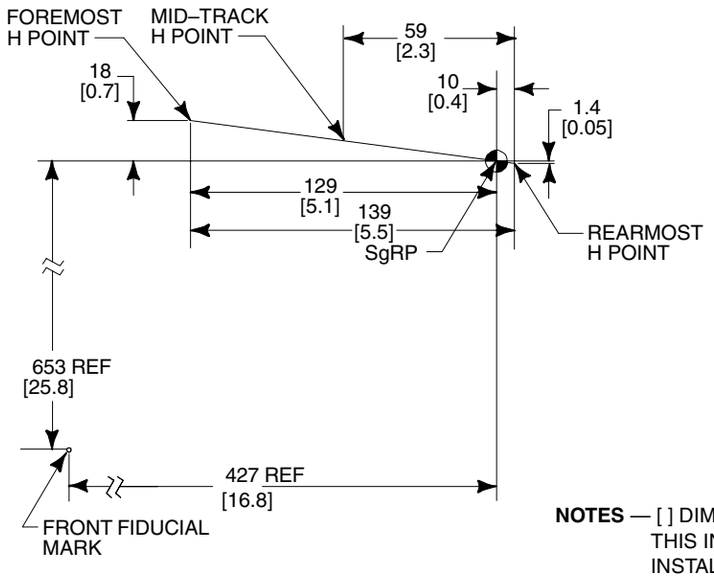

BB0056

NOTES — [ ] DIMENSIONS ARE INCHES.
THIS INFORMATION IS PROVIDED TO ASSIST IN THE INSTALLATION OF SEATS OTHER THAN FORD INSTALLED SEATS AND TO HELP PRESERVE THE INTENDED PERFORMANCE OF THE SAFETY AND ERGONOMIC FEATURES OF THE 2003 E-SERIES. THE MID-TRACK H-POINT LOCATION MUST BE MAINTAINED IN ORDER TO COMPLY WITH F/CMVSS 208 AIRBAG REQUIREMENTS.

F-150
SEAT TRACK TRAVEL/H-POINT LOCATION

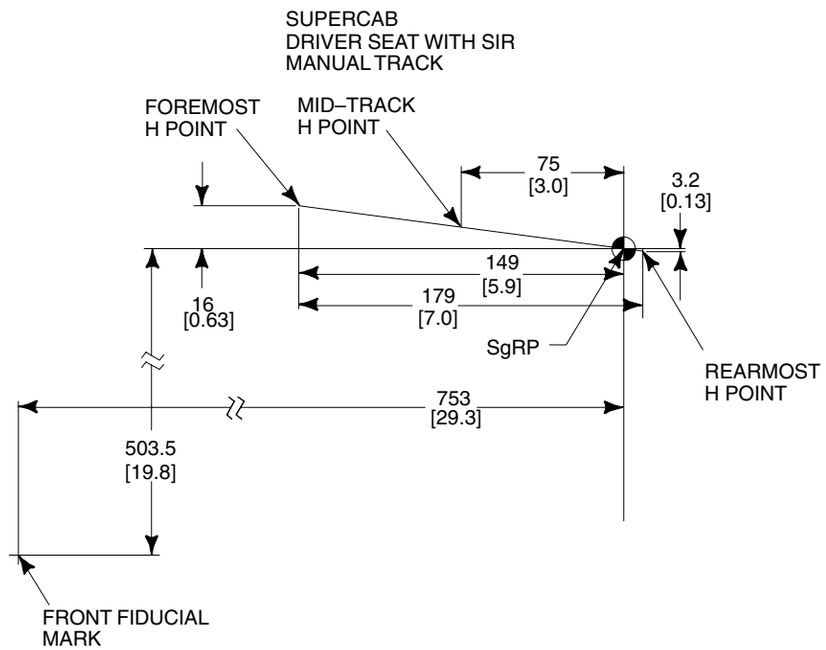

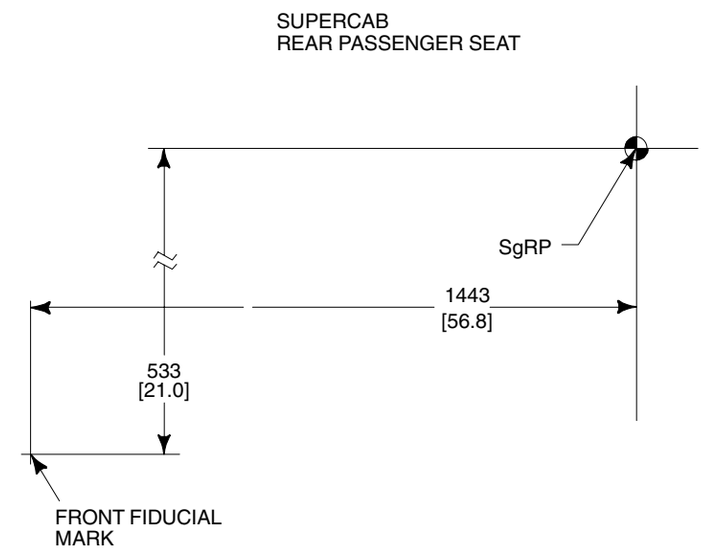

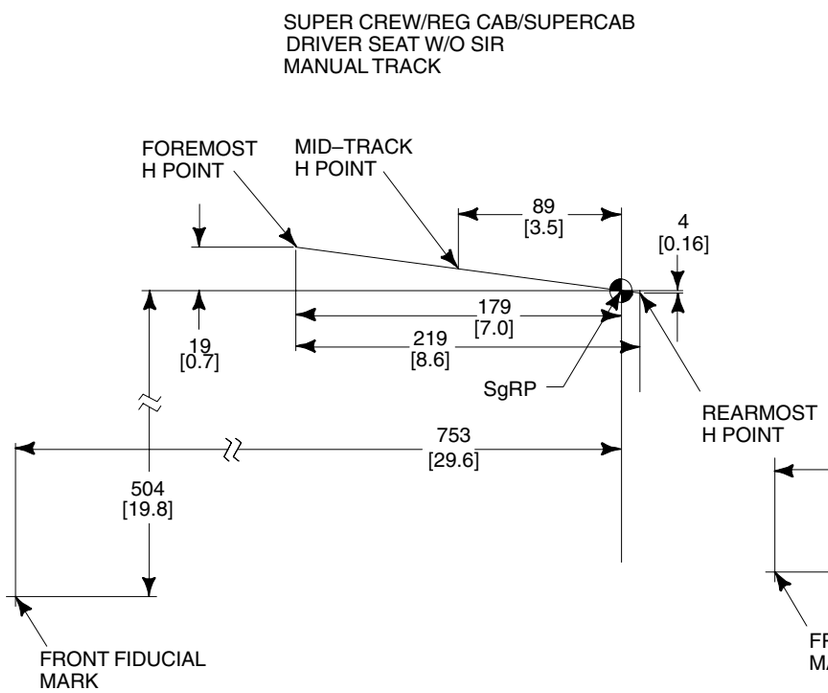

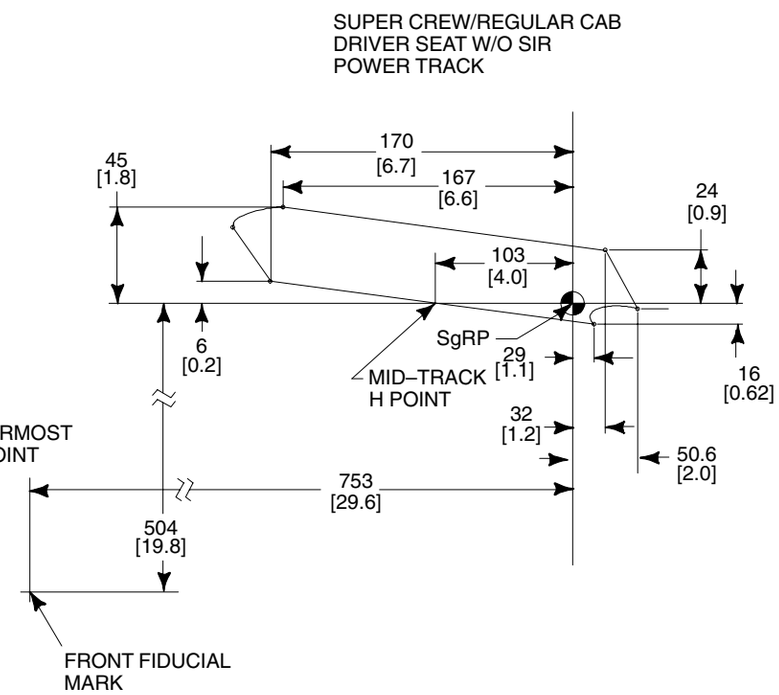

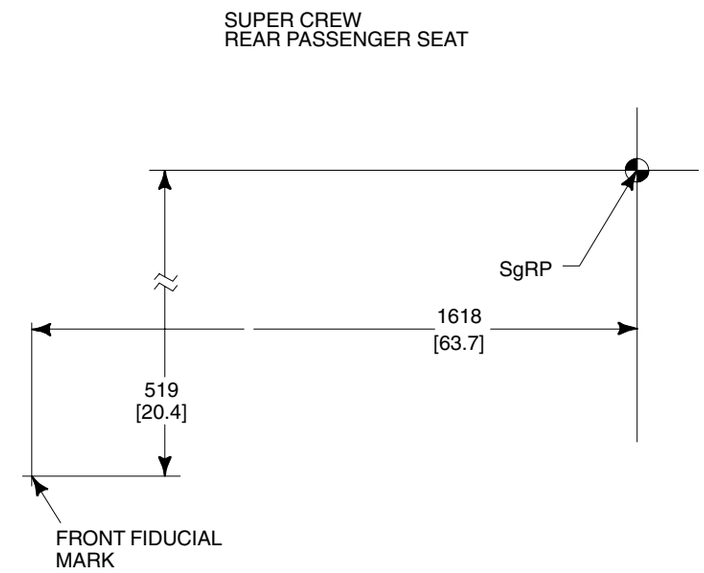

NOTE — [ ] DIMENSIONS ARE INCHES.

BB0298

F-150
SEAT TRACK TRAVEL/H-POINT LOCATION

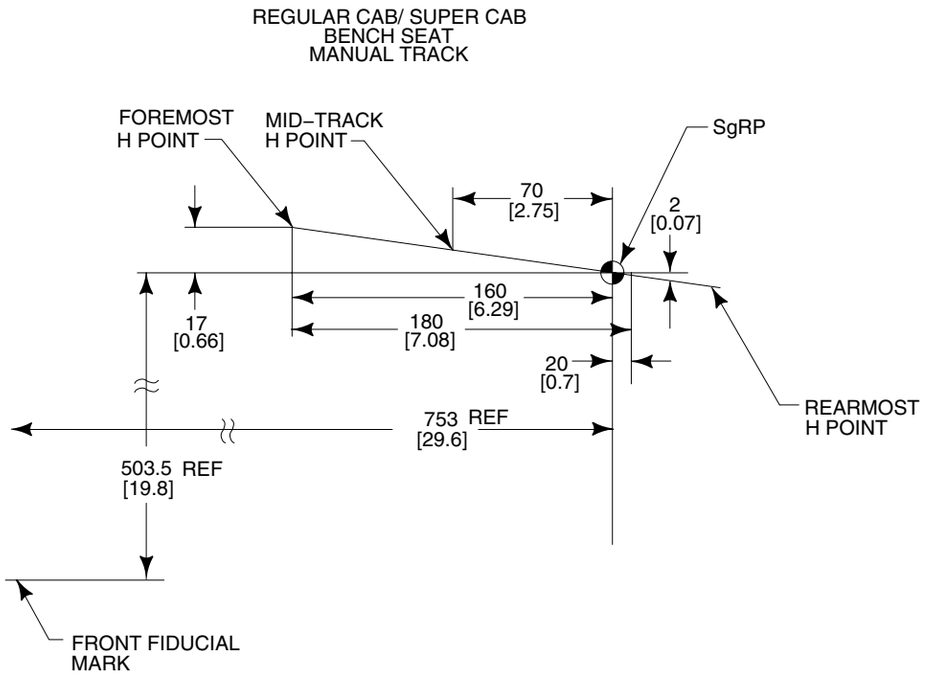

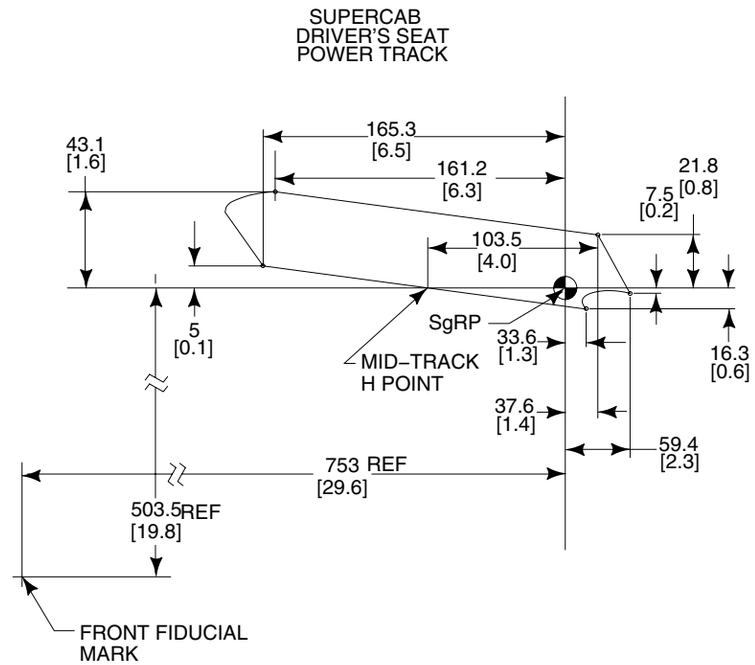

BB0700

NOTE — [ ] DIMENSIONS ARE INCHES.

SUPER DUTY F-SERIES
SEAT TRACK TRAVEL/H-POINT LOCATION

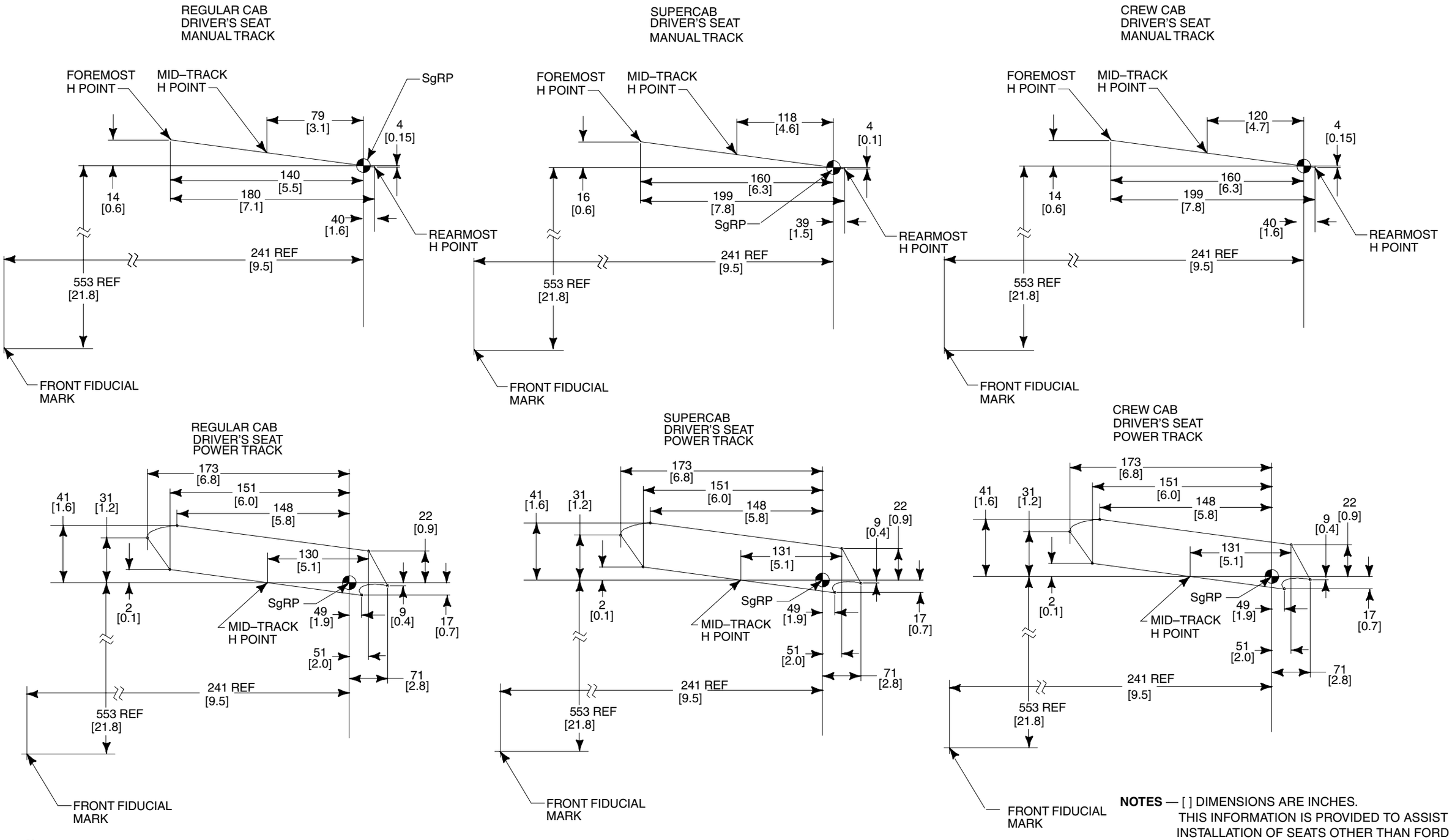

NOTES — [ ] DIMENSIONS ARE INCHES.
THIS INFORMATION IS PROVIDED TO ASSIST IN THE INSTALLATION OF SEATS OTHER THAN FORD INSTALLED SEATS AND TO HELP PRESERVE THE INTENDED PERFORMANCE OF THE SAFETY AND ERGONOMIC FEATURES OF THE 2003 SUPER DUTY F-SERIES OVER 8500 LB.

OCCUPANT PROTECTION SYSTEMS
SEAT RESTRAINT SYSTEM

INFORMATION

The following recommendations are intended to assist in the design of seats and seat belt systems capable of meeting the requirements of the F/CMVSS 207, 208, 209 and 210 except for front seating positions for vehicles having a GVWR of 3855 kg [8500 lb] or less, and an Unloaded Vehicle Weight of 2495 kg [5500 lb] or less. These recommendations are based on testing and analyses performed by Ford Motor Company.

Ford cautions subsequent stage manufacturers to note the definition of “Designated Seating Positions” on page 22. If a position can reasonably be used by a 5th percentile adult female for seating and the overall seat configuration and vehicle design make it likely that the position will be used by an occupant while the vehicle is in motion, then the position must be considered to be a “Designated Seating Position” for determination of compliance to U.S. and Canadian motor vehicle safety standards.

Seat and seat belt systems may take many forms; this list of recommendations cannot cover all possibilities. Strict adherence to these suggestions will not ensure that systems will comply with F/CMVSS 207, 208, 209 and 210. Responsibility for determining compliance to appropriate F/CMVSS regulations is that of the final stage manufacturer. Accordingly, Ford Motor Company makes no representation as to the appropriateness of any particular recommendation in its specific application of a particular design or act of intermediate or final stage manufacture.

To confidently verify compliance with F/CMVSS 207, 208, 209 and 210, the testing of representative systems to applicable F/CMVSS 207, 208, 209 and 210 procedures is recommended. Questions regarding compliance with F/CMVSS regulations should be directed to your legal counsel, the National Highway Traffic Safety Administration, or Transport Canada.

SEAT SYSTEMS

1. For Incomplete E-Series Vans and Cutaways with a GVWR over 3855 kg [8500 lb] purchased with the front seat delete option, Ford strongly recommends following the practices specified in the compliance representations for F/CMVSS 208 that apply to Incomplete E-Series Vans with a GVWR of 3855 kg [8500 lb] or less and completed units Unloaded Vehicle Weight of 2495 kg [5500 lb] or less that are purchased without front seats.
2. Any additional seats and seat anchorages installed by subsequent stage manufacturers must meet F/CMVSS 207 requirements and specifications.
3. Do not modify or alter Ford furnished seating or occupant restraint system. When utilizing the Ford seat delete package, care must be taken to insure proper function of the seat adjustment latching mechanism, electrical wiring and seat belt buckle pretensioner. Refer to Bulletin Q-48 for wire routing.
4. If the seat or seat belt components are temporarily removed for any reason, they must be reinstalled in accordance with the instructions and specifications found on the following pages for E-Series, Super Duty F-Series or the applicable *Ford Truck Shop Manual*.
5. Seating systems that include the attachment of lap belt or shoulder belt assemblies should also consider the requirements of F/CMVSS 210 as part of the seating system.
6. Seating system components should be free of sharp edges to prevent damage to seat belt systems when the belts could potentially contact the seating system components.
7. Seats should be mounted with appropriate fasteners in the mounting holes provided, since these holes are located to utilized floor pan structural reinforcements. See figures on following pages.
8. If additional holes are required for any reason, their locations should be carefully selected so that the structural integrity of the floor pan will not be compromised and to prevent damage to other components located below the floor.
9. Seating systems should be designed to be compatible with the seat belt systems, so as to permit proper adjustment, allow for occupant movement and provide convenient accessibility of the restraint system buckle release.
10. Seats not designated for occupancy while the vehicle is in motion must be conspicuously labeled as such.

WARNING:

FORD SAFETY BELTS ARE DESIGNED TO WORK WITH THE SEATS ORIGINALLY DESIGNED FOR THE VEHICLE. IF A MODIFIER USES DIFFERENT SEATS WITH FORD SEAT BELTS, THAT MODIFIER MUST ENSURE THE SAFETY BELTS AND REPLACEMENT SEATS MEET ALL FMVSS REQUIREMENTS AND WILL PERFORM SAFELY IN THE FIELD. FAILURE TO DO SO COULD RESULT IN SERIOUS INJURY IN THE EVENT OF A COLLISION.

LAP AND SHOULDER BELT SYSTEMS

1. The front seats are equipped with a pyrotechnic buckle pretensioner. The buckle pretensioner reduces slack in the lap and should safety belt by pulling the buckle downward. The buckle pretensioners and air bags operate on the same sensors and will function simultaneously.
2. Additional lap and shoulder belt assemblies, including retractors and hardware, must comply with the requirements of F/CMVSS 208 and 209.
3. Additional lap and shoulder belt system anchorages must comply with the requirements of F/CMVSS 210.
4. Lap and shoulder belt systems that are attached to seat frame or base may affect compliance of the seating system with the requirements of F/CMVSS 207.
5. Ford lap and shoulder belts, retractors and attaching hardware should not be altered or modified in any way. The reinstallation of these components should follow the instructions and specifications on the following pages, or those in the appropriate *Ford Truck Shop Manual*.
6. Lap and shoulder belt assemblies should be compatible with the seat systems and anchorages so that lap belts will be properly positioned about the occupant’s pelvis to provide proper adjustment and fit. The buckle and buckle release are properly located with respect to the occupant and must comply with the requirements of F/CMVSS 208.
7. Seat belt warning system activation/deactivation, where applicable, should be provided by the lap and shoulder belt assembly.

WARNING:

THE SEAT BELT BUCKLE PRETENSIONER, AIRBAGS AND ELECTRONIC SENSOR MODULE ARE BAR CODED WITH AN UNIQUE SERIAL NUMBER WHICH IS MATCHED TO THE VEHICLE VIN. TO MAINTAIN THE OCCUPANT PROTECTION SYSTEM PERFORMANCE, THE COMPLETED VEHICLE MUST CONTAIN THE SAME SEAT BELT BUCKLE PRETENSIONER, AIR BAGS AND ELECTRONIC SENSOR MODULE THAT WERE INSTALLED BY FORD MOTOR COMPANY. FAILURE TO DO SO COULD RESULT IN SERIOUS INJURY IN THE EVENT OF A COLLISION.

OCCUPANT PROTECTION ZONE AND OVERHEAD CONSOLE

For vehicles completed with an Unloaded Vehicle Weight (UVW) greater than 2495 kg [5500 lb], Ford strongly recommends following the practices in the compliance representations for F/CMVSS 208 regarding overhead console specifications that apply to Incomplete E-Series Vans with a GVWR of 3856 kg [8500 lb] or less and completed units have an Unloaded Vehicle Weight of 2495 kg [5500 lb] or less. Refer to the *Incomplete Vehicle Manual* for these compliance representations.

OCCUPANT PROTECTION SYSTEMS
SEAT RESTRAINT SYSTEM

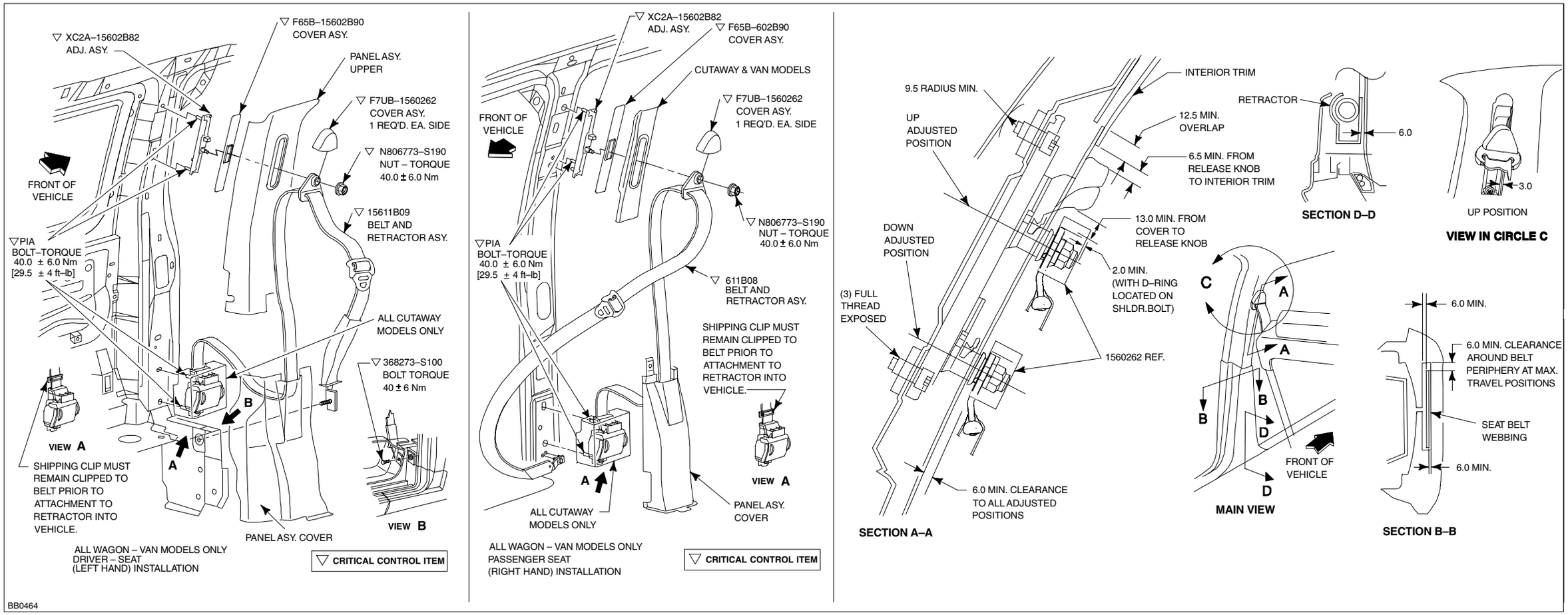

E-SERIES DRIVER (LH)
SEAT RESTRAINT SYSTEM INSTALLATION

E-SERIES PASSENGER (RH)
SEAT RESTRAINT SYSTEM INSTALLATION

E-SERIES FRONT SEAT RESTRAINT INSTALLATION

NOTE — [ ] DIMENSIONS ARE FT-LB OR INCHES.

OCCUPANT PROTECTION SYSTEMS
SEAT RESTRAINT SYSTEM

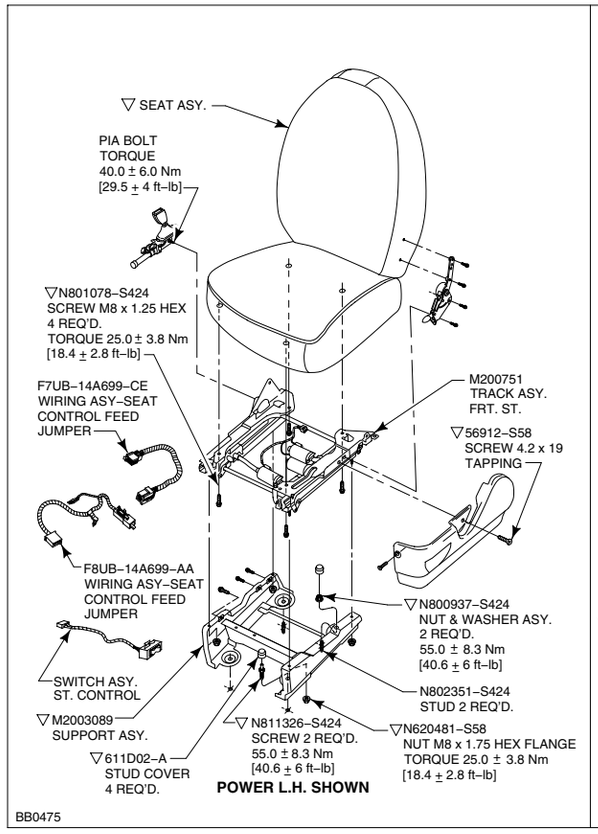

E-SERIES DRIVER (LH)
SEAT INSTALLATION

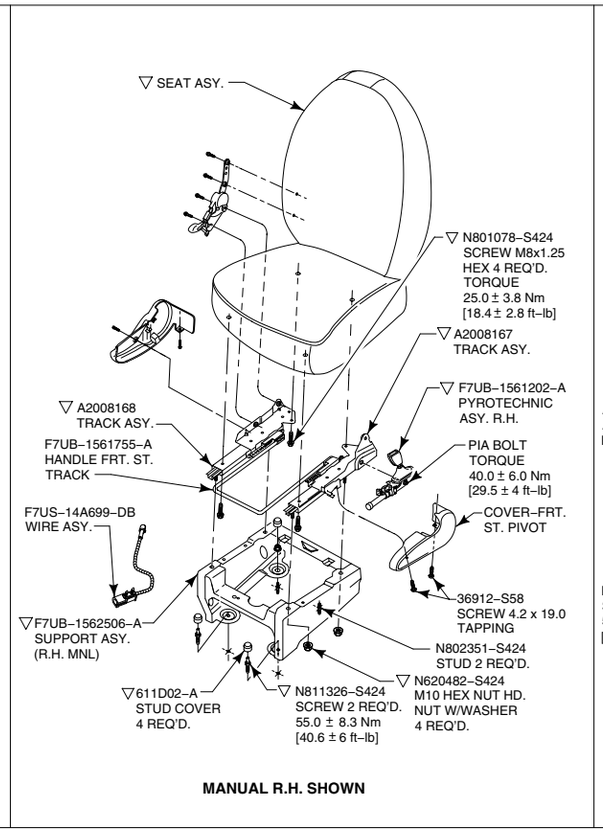

E-SERIES PASSENGER (RH)
SEAT INSTALLATION

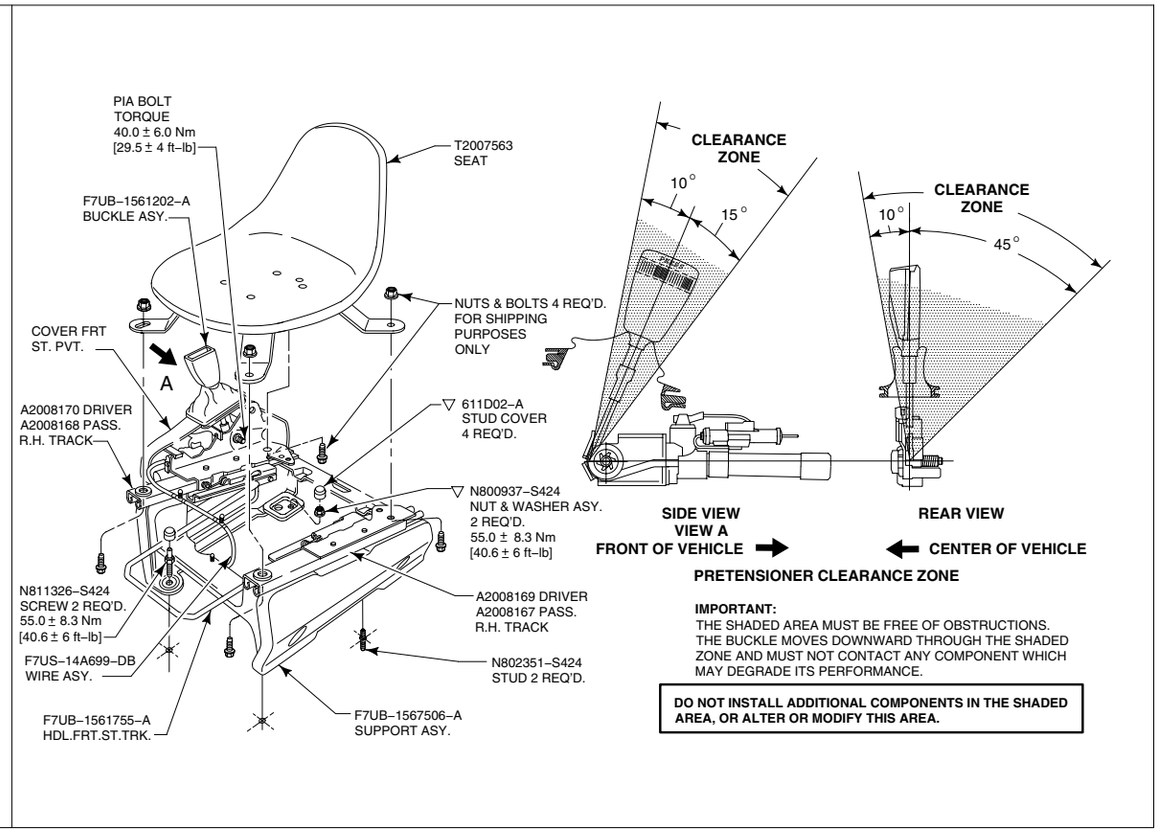

E-SERIES DRIVER (LH)
SEAT DELETE OPTION

NOTE — [ ] DIMENSIONS ARE FT-LB OR INCHES.

OCCUPANT PROTECTION SYSTEMS
SEAT RESTRAINT SYSTEM

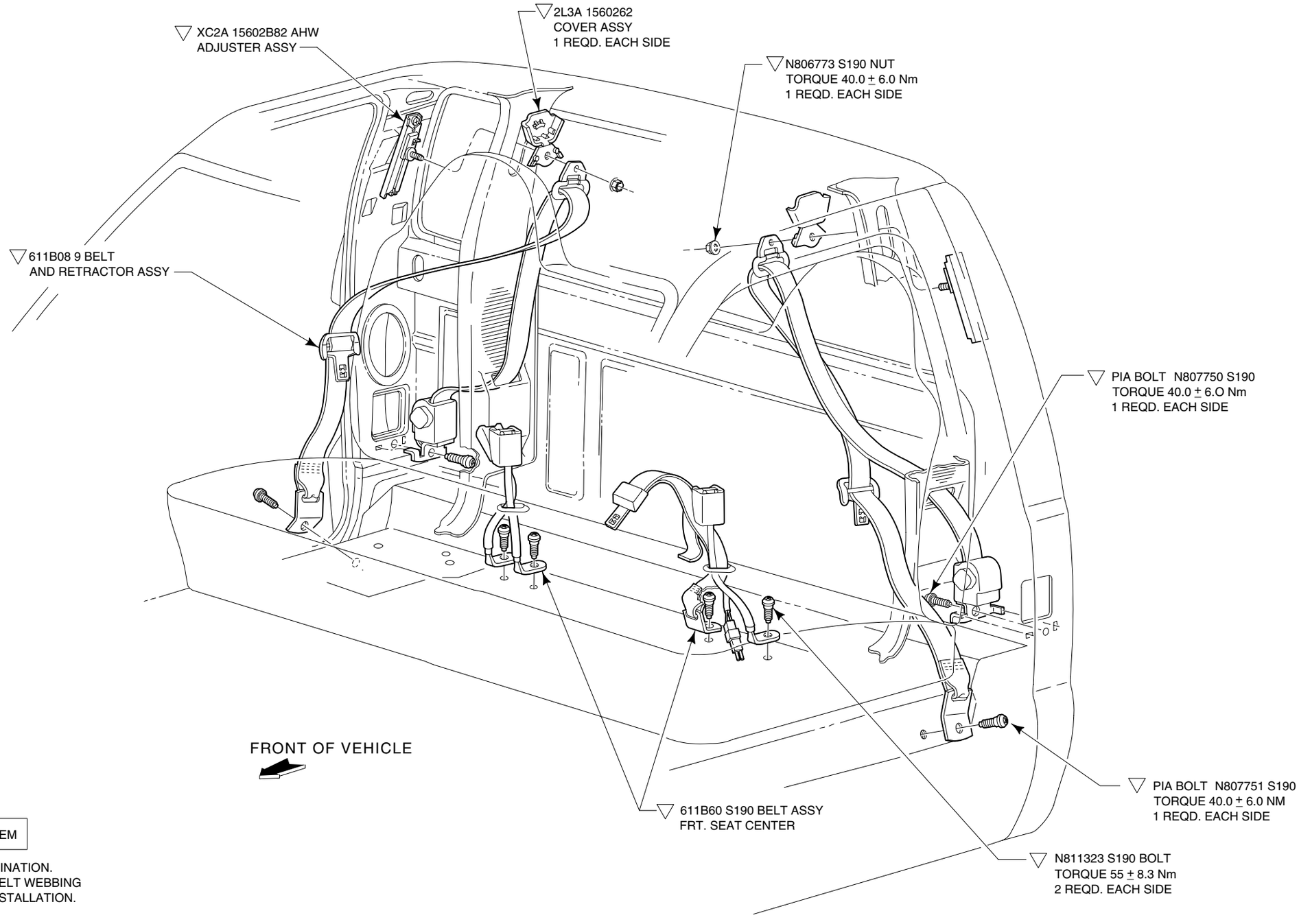

▽ CRITICAL CONTROL ITEM

▽ NOTE: AVOID CONTAMINATION. ASSURE THAT SEAT BELT WEBBING IS NOT TWISTED AT INSTALLATION.

BB0431 2003

SUPER DUTY F-SERIES FRONT PASSENGER BENCH RESTRAINT SYSTEM - REGULAR CAB

OCCUPANT PROTECTION SYSTEMS
SEAT RESTRAINT SYSTEM

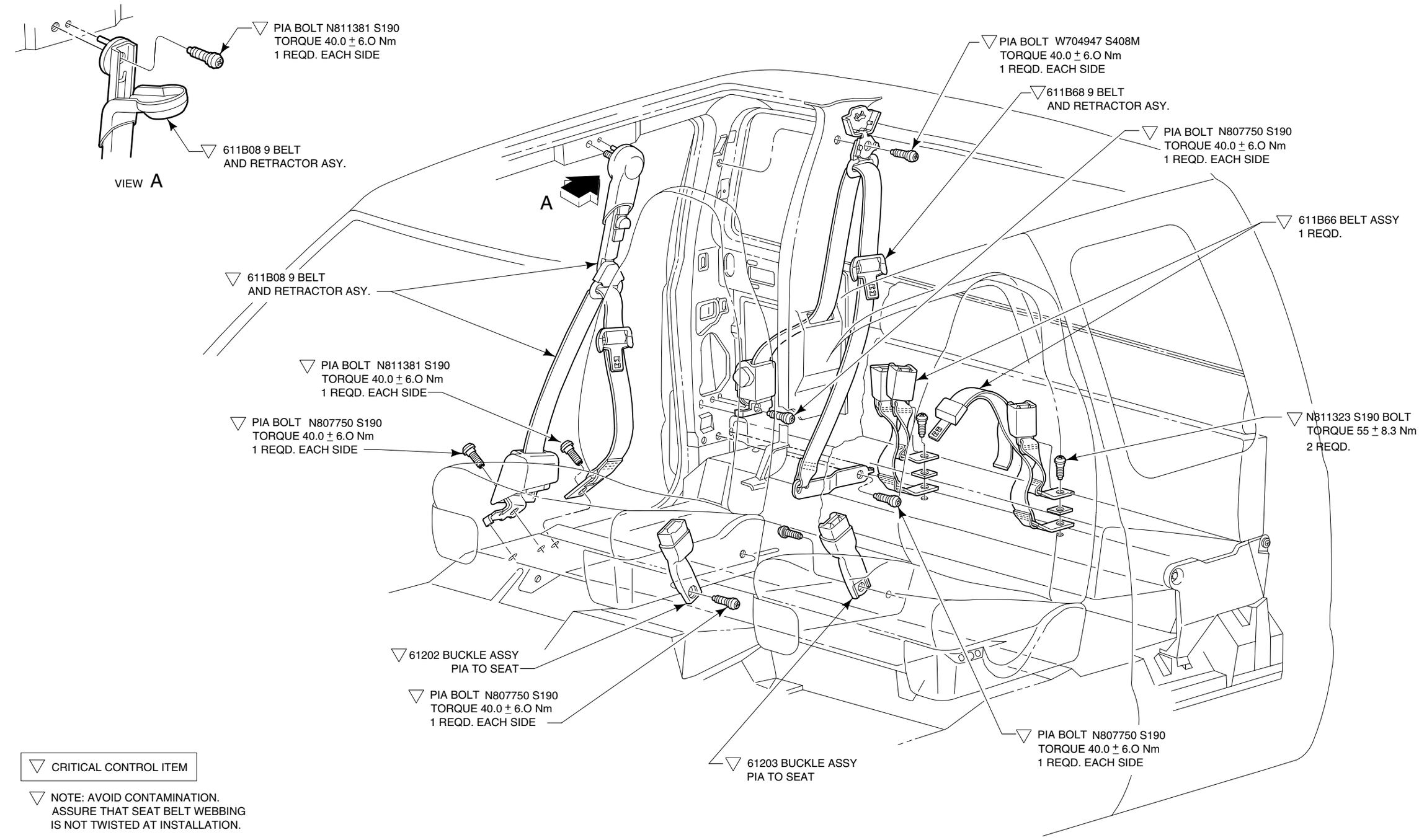

SUPER DUTY F-SERIES FRONT PASSENGER AND REAR SEAT RESTRAINT SYSTEMS - SUPERCAB

OCCUPANT PROTECTION SYSTEMS
SEAT RESTRAINT SYSTEM

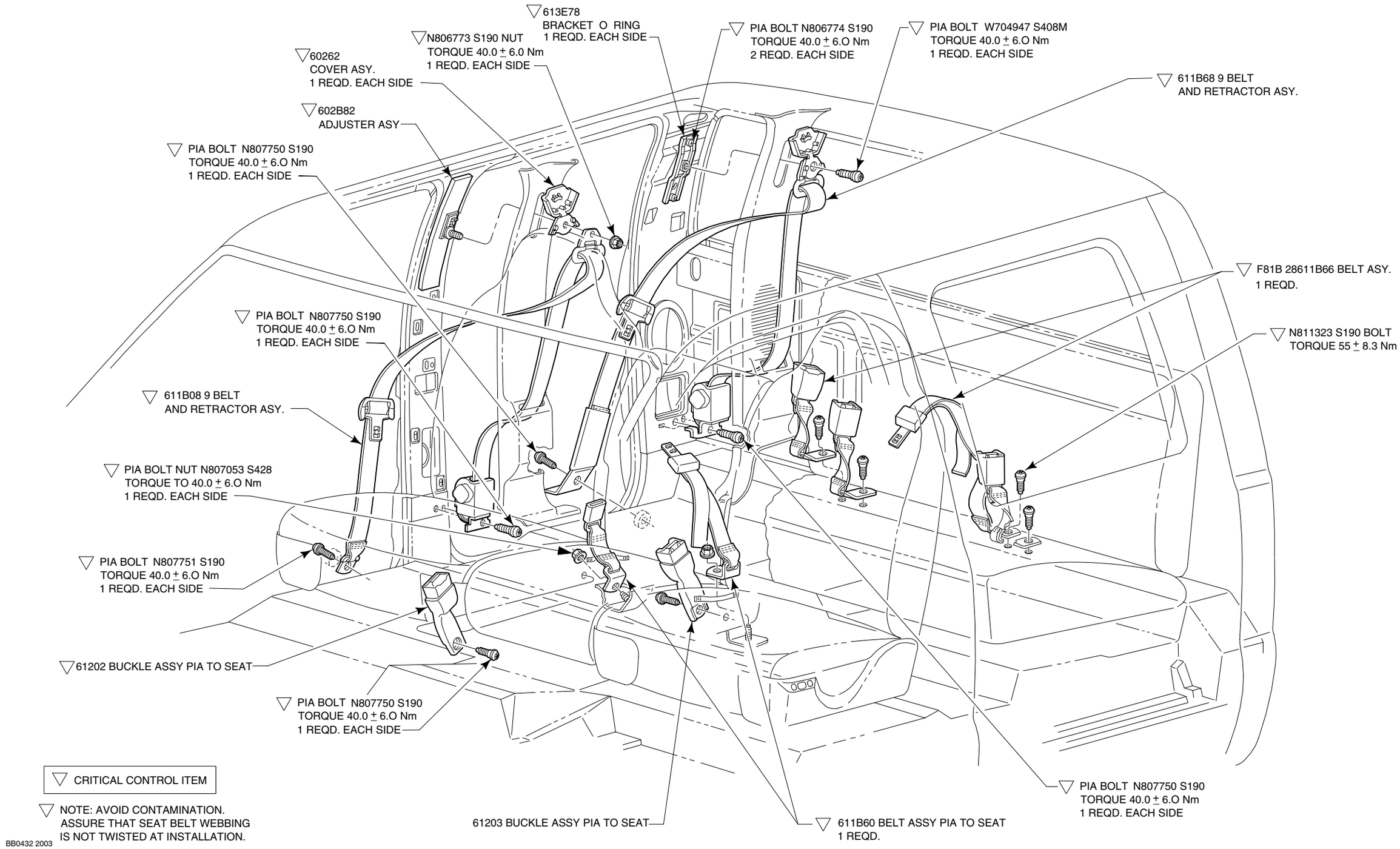

SUPER DUTY F-SERIES FRONT PASSENGER AND REAR SEAT RESTRAINT SYSTEMS WITH 40/20/40 SEATS - CREW CAB

OCCUPANT PROTECTION SYSTEMS
AIRBAG SUPPLEMENTAL RESTRAINT SYSTEM

INFORMATION

Ford urges careful consideration of the recommendations that follow. They are based on analyses of component and vehicle tests, actual service situations, and engineering judgments. Disregard of these recommendations may affect the durability, reliability, handling and performance characteristics of a completed vehicle and may result in elevated underbody temperatures, increase the potential for fire, or may affect the safety of the occupants in the event of an accident.

These recommendations are supplemental to U.S. and Canadian Motor Vehicle Safety compliance representations provided in the *Incomplete Vehicle Manual* (IVM). Also, additional information is provided in the *Ford Truck Service Manual* which may be helpful to subsequent stage manufacturers.

The completed vehicle in the “Loaded” condition must not exceed the front GAWR, rear GAWR or the GVWR. (“Loaded” means the completed vehicle weight with the maximum fluid capacity necessary for vehicle operation, plus 150 lb for each designated seating position, and an additional allowance for any cargo weight advertised by the manufacturer). The GAWR and GVWR are on the label affixed to the cover of the *Incomplete Vehicle Manual*.

Subsequent Stage Manufacturers are encouraged to contact the Ford Truck Body Builder Advisory Service if they have any questions concerning these recommendations.

AIRBAG SUPPLEMENTAL RESTRAINT SYSTEM

Some trucks produced by Ford Motor Company are equipped with an Airbag Supplemental Restraint System (SRS). Vehicles equipped with this system will have the words “AIRBAG” and an airbag symbol on the VIN plate located on the top driver-side corner of the instrument panel. System components are shown in their vehicle locations on the following pages.

Included on the vehicle identification number -VIN- plate (visible through the windshield) of the vehicle, manufactured by Ford with a driver’s airbag, are the words “AIR” and “BAG” and a pictogram for the airbag separating the two (see illustration below).

BB0538

Detailed system and service information will be found in the *Ford Truck Service Manual* for the appropriate type and model year. Ford Motor Company urges the subsequent stage manufacturers to become familiar with this system prior to modifying vehicles that are so equipped.

CAUTION:

DO NOT REMOVE THE STEERING COLUMN, STEERING WHEEL, AND AIRBAG MODULE AS AN ASSEMBLY FROM THE VEHICLE UNLESS (1) THE COLUMN IS LOCKED TO PREVENT ROTATION, OR (2) THE LOWER END OF STEERING SHAFT IS SECURED (e.g., by wire) IN SUCH A WAY THAT THE STEERING WHEEL CANNOT BE ROTATED.

WARNING:

THE SEAT BELT BUCKLE PRETENSIONER, AIRBAGS, AND ELECTRONIC SENSOR MODULE ARE BAR CODED WITH A UNIQUE SERIAL NUMBER WHICH IS MATCHED TO THE VEHICLE VIN. TO MAINTAIN THE OCCUPANT PROTECTION SYSTEM PERFORMANCE, THE COMPLETED VEHICLE MUST CONTAIN THE SAME SEAT BELT BUCKLE PRETENSIONER, AIR BAGS, AND ELECTRONIC SENSOR MODULE THAT WERE INSTALLED BY FORD MOTOR COMPANY. FAILURE TO DO SO COULD RESULT IN SERIOUS INJURY IN THE EVENT OF A COLLISION.

If electrical work is performed in the steering column area, the instrument panel of the air bag system, the system must be deactivated to avoid unwanted inflation of the air bag. To do this, follow the procedure described on this page.

DEACTIVATION PROCEDURE

1. Disconnect all negative battery cable(s), and power supplies (if equipped).
2. Wait 1 minute. This is the time required for backup power supply in diagnostic monitor to deplete its stored energy.

WARNING:

TO AVOID ACCIDENTAL DEPLOYMENT AND POSSIBLE PERSONAL INJURY, THE BACKUP POWER SUPPLY MUST BE DEPLETED BEFORE REPAIRING OR REPLACING ANY AIRBAG SUPPLEMENTAL RESTRAINT SYSTEM (SRS) COMPONENTS. TO DEPLETE THE BACKUP POWER SUPPLY ENERGY, DISCONNECT THE BATTERY GROUND CABLE AND WAIT ONE MINUTE. BE SURE TO DISCONNECT AUXILIARY BATTERIES AND POWER SUPPLIES (IF EQUIPPED).

WARNING:

CARRY A LIVE AIRBAG MODULE WITH THE AIRBAG AND TRIM COVER POINTED AWAY FROM YOUR BODY. THIS WILL REDUCE THE RISK OF INJURY IN THE EVENT OF AN ACCIDENTAL DEPLOYMENT.

WARNING:

DO NOT SET A LIVE AIRBAG MODULE DOWN WITH THE TRIM COVER FACE DOWN.

3. Remove fasteners retaining driver airbag module to steering wheel. Disconnect driver airbag connector and remove the bag from steering wheel. Place the bag on a flat surface with trim cover facing upward. Connect an Airbag Simulator (Part # 105-R0012 in the Rotunda Tool catalog) to the airbag connector on the wire harness in the steering wheel.
4. Disconnect passenger airbag module connector and replace it with an Airbag Simulator (Part # 105-R0012 in the Rotunda Tool catalog) to the airbag connector on the wire harness in the I/P.
5. Reconnect all negative battery cables and power supplies (if equipped).

REACTIVATION PROCEDURE

1. Disconnect all negative battery cable(s) and power supplies (if equipped).
2. Wait 1 minute for backup power supply to deplete stored energy.
3. Remove Airbag Simulator and reconnect driver airbag connector. Position driver airbag on steering wheel and secure with fasteners (10 mm). Tighten fasteners to 2.7-3.7 Nm. [24-32 in-lb].
4. Remove Airbag Simulator and reconnect passenger airbag connector.
5. Reconnect all negative battery cables and power supplies (if equipped).
6. PROVE-OUT the system.

PROVE-OUT SYSTEM PROCEDURE

Prove out system means to turn the ignition switch from OFF to RUN and visually monitor the airbag indicator. The airbag will light continuously for approximately six seconds and then turn off. If an airbag system fault is present, the indicator will either fail to light, remain lit continuously or light in a flashing manner. The flashing manner may not occur until approximately 30 seconds after the ignition switch has been turned from OFF to RUN. This is the time required for the diagnostic monitor to complete the testing of the airbag system. If the airbag indicator is inoperative and an airbag system fault exists, a tone will sound in a pattern of five sets of five beeps. If this occurs, the airbag indicator will need to be serviced before further diagnosis can be done.

OCCUPANT PROTECTION SYSTEMS
AIRBAG SUPPLEMENTAL RESTRAINT SYSTEM

VEHICLE	DRIVER	PASSENGER
Windstar	Standard Front Optional Side	Standard Front Optional Side
Ranger	Standard Front	Standard Front (Includes deactivation switch except with Crew Cab models)
F150	Standard Front	Standard Front (Includes deactivation switch except with Crew Cab models)
E-Series Wagon	Standard Front	Standard Front
E-Series Vans	Standard Front	Standard Front
E-Series Cutaway/Chassis Cab	Standard Front	Standard Front
E-Series Stripped Chassis	—	—
Super Duty F-Series Pickups	Standard Front	Standard Front (Includes deactivation switch except with Crew Cab models)
Super Duty F-Series Pickup Box Delete and Chassis Cabs	Standard Front	Standard Front (Includes deactivation switch except with Crew Cab models)

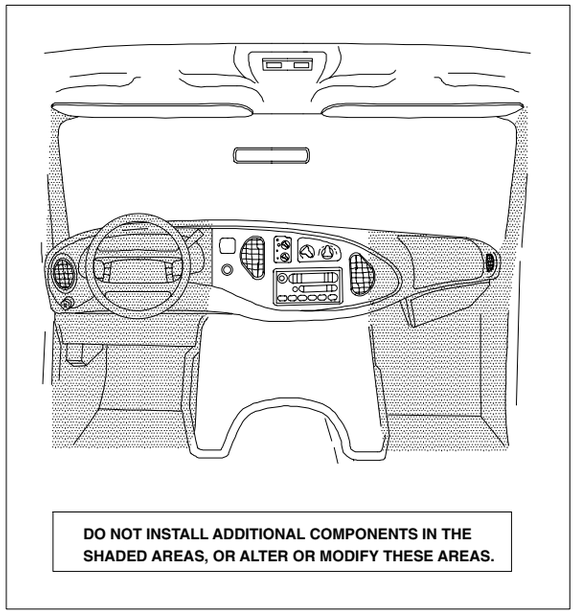

FIGURE A - E-SERIES OCCUPANT PROTECTION ZONE

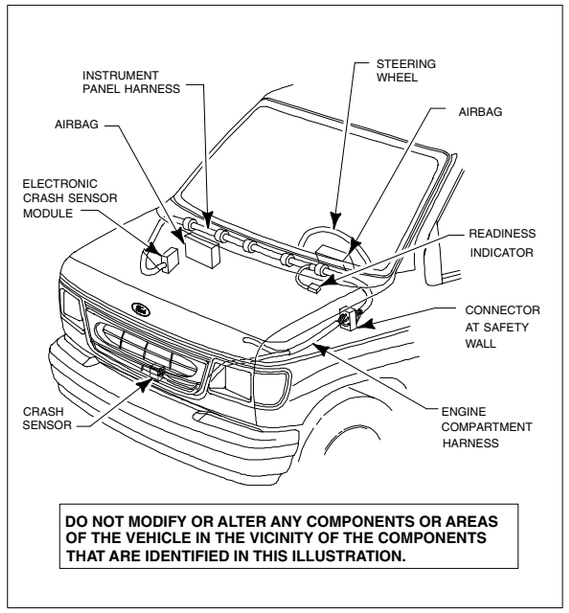

FIGURE B - E-SERIES SUPPLEMENTAL RESTRAINT SYSTEM (AIRBAGS, SENSORS AND WIRING)

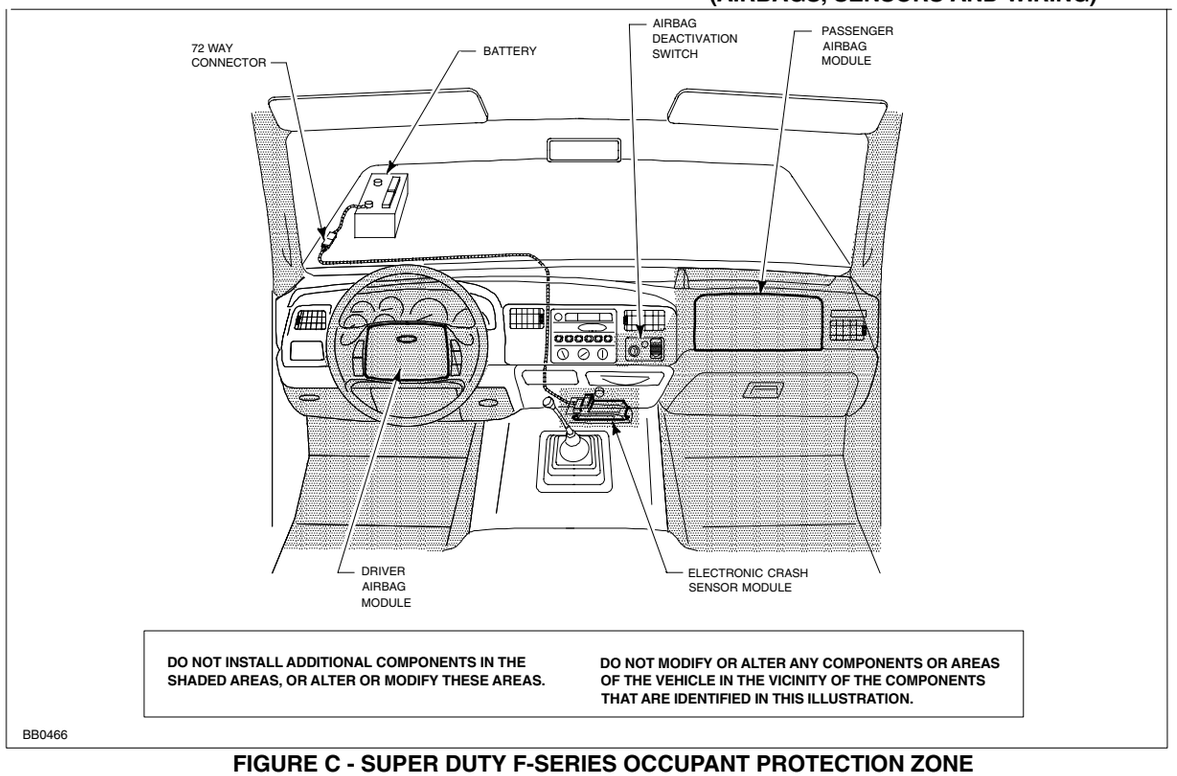

FIGURE C - SUPER DUTY F-SERIES OCCUPANT PROTECTION ZONE

OCCUPANT PROTECTION SYSTEMS
AIRBAG SUPPLEMENTAL RESTRAINT SYSTEM

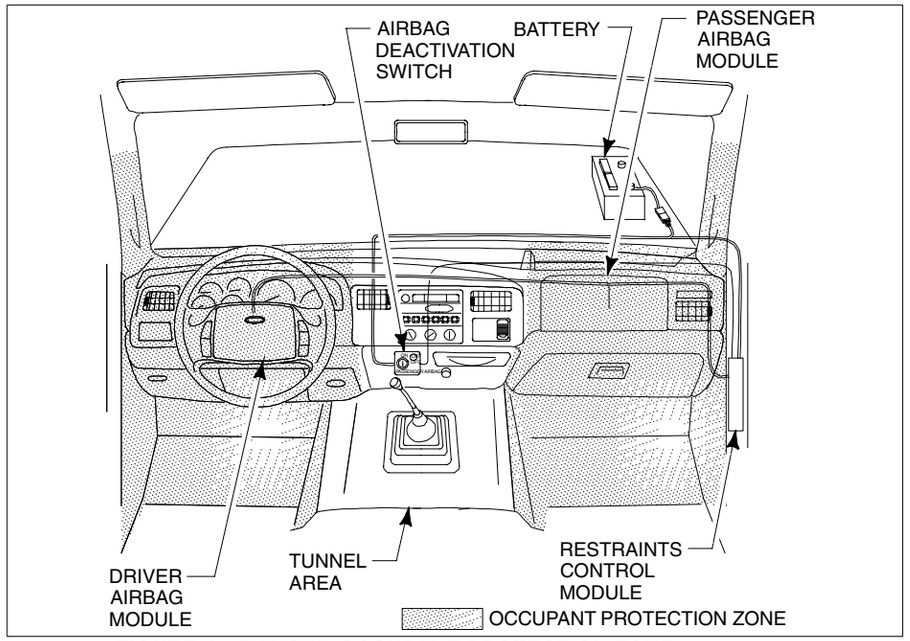

FIGURE A - RANGER OCCUPANT PROTECTION ZONE

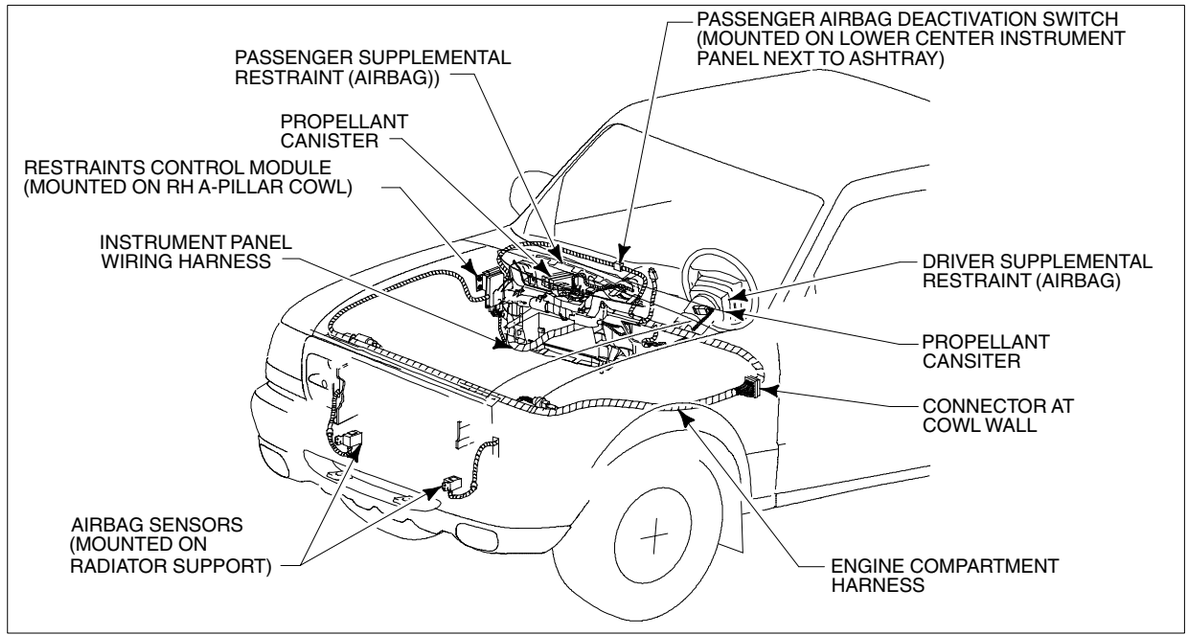

FIGURE B - RANGER SUPPLEMENTAL RESTRAINT SYSTEM (AIRBAGS, SENSORS AND WIRING)

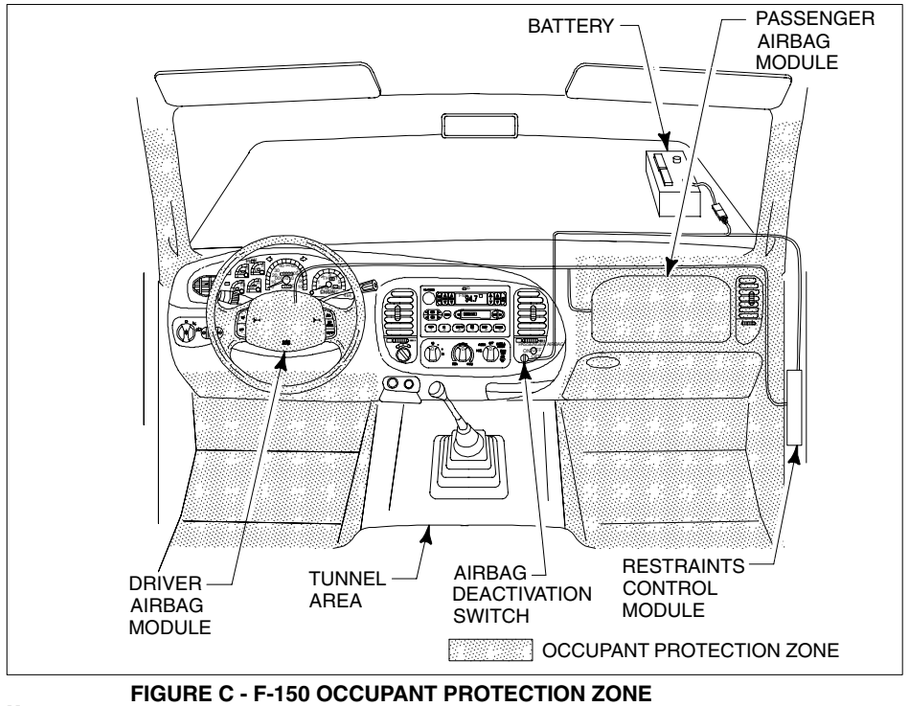

FIGURE C - F-150 OCCUPANT PROTECTION ZONE

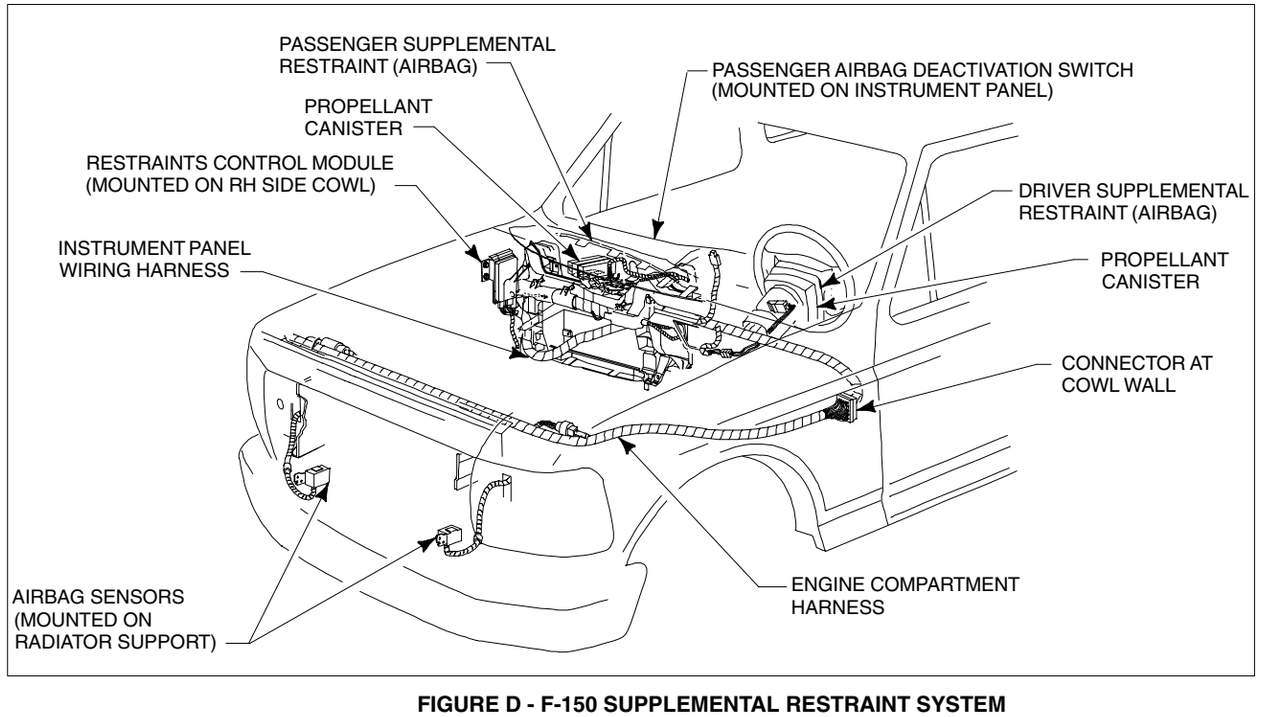

FIGURE D - F-150 SUPPLEMENTAL RESTRAINT SYSTEM (AIRBAGS, SENSORS AND WIRING)

BB0454

EXTERIOR

The U.S. Federal Government, the Canadian Federal Government, and some states, provinces and municipalities have enacted a variety of noise control laws and regulations which apply to motor vehicles sold or operating within their jurisdictions. Sales Representatives should become familiar with the various sales and user regulations, as required, to alert the individual purchaser. Moreover, the individual purchaser should check and become aware of any applicable regulations. The individual purchaser should be sure that the specifications of the vehicle, which he orders, are appropriate in view of those sales and user noise regulations applicable to his purchase and his anticipated user of that vehicle.

Although vehicles which have GVWRs over 4536 kg (10,000 lb) are designed to comply with Federal Interstate Motor Carrier Noise Emissions Standards, 40 CFR § 325, Ford Motor Company does not represent compliance with this standard under numerous and varying conditions under which such vehicles may be operated.

Furthermore, Ford does not represent compliance of any school bus, stripped chassis or chassis-cowl type vehicles with any noise control law or regulation. Because vehicle noise varies with number of tires on total vehicle combination, tire tread pattern, vehicle load, tire wear and the road surface condition, completed vehicles should not be ordered with lug-type tires.

Vehicles, to which alterations or additions are made that may increase noise emissions, must be ascertained to comply with the applicable noise standards after modifications have been completed by the vehicle modifiers.

EXTERIOR NOISE REGULATIONS APPLICABLE TO SALE OF NEW VEHICLES

The U.S. Environmental Protection Agency (EPA) noise emission standards for medium and heavy trucks in excess of 4536 kg (10,000 lb) GVWR (40 CFR § 205.52) preempts, with certain exceptions, all those state and local noise regulations that are applicable to the sale of such new vehicles, and are not identical to the federal standards. These federal standards, which set a maximum sound emission level 80 dB(A), as measured by the prescribed procedure, are effective in all states, the District of Columbia, Puerto Rico, Virgin Islands, American Samoa, Guam and the Trust Territory of the Pacific Islands. These Federal regulations do not apply to school buses which are required to meet 80 dB(A) in a number of local jurisdictions. They also do not apply to trucks not having a partially or fully enclosed operator's compartment (for example stripped chassis). (See 40 CFR § 205.50, "Applicability" and pertinent definitions in § 205.51. See 40 CFR § 205.55-1 (b) for when incomplete vehicles being completed become subject to the Federal standard.)

SPECIFICATIONS FOR INTERIOR NOISE WHEN BMCS (INTERSTATE COMMERCE) SERVICE IS INDICATED

The Federal Interstate Motor Carrier interior noise standard (49 CFR § 393.94) is applicable to all motor vehicles. This standard requires that the interior sound level at the driver's seating position of nay such vehicle not exceed 90db(A), when measured in accordance with the test procedure in 49 CFR § 393.94(c).

Ford Motor Company does not represent that stripped chassis or cutaway vehicles manufactured by Ford Motor Company comply with the Federal Interstate Motor Carrier interior noise standard.

Vehicles subjected to alterations or additions, which may increase interior sound levels, must be ascertained to comply with the interior noise regulation after the modifications have been completed by the vehicle modifiers.

CANADIAN INTERIOR NOISE REGULATION

Trucks and buses over 4536 kg (10,000 lb) GVWR manufactured for use in Canada must meet the noise standard of the Canada Motor Vehicle Safety Standards (Section 1106 (2)) which specifies that the interior sound level at the driver's seating position shall not exceed 90 db(A), as measured in accordance with the test procedure set forth in Section 1106 (2).

Ford Motor Company does not represent that stripped chassis vehicles and vehicles with cut-away operators' compartments comply with the standard.

RADIO FREQUENCY INTERFERENCE (RFI)

The ignition system on your vehicle (if other than a stripped chassis) has been designed to be capable of compliance with RFI requirements established by the Canadian government. However, because Ford has no control over how an incomplete vehicle is completed by subsequent-stage manufacturers, Ford does not represent that the completed vehicle, incorporating the Ford-built components, will comply with those requirements. Any ignition system component (i.e., spark plugs, ignition wiring, coil suppressor assembly, etc.) that is replaced should be replaced by the same Ford Motor Company part number or equivalent, to maintain RFI suppression. Ford Motor Company does not represent that stripped chassis vehicles comply with the standard.

While there are currently no RFI regulations in the United States, specifically applicable to automotive ignition systems, some Ford trucks are built with ignition system components the same or equivalent to those supplied on Canadian vehicles. Ford Motor Company recommends that all ignition system service be performed at a Ford-authorized service facility to help hold RFI emission levels to a minimum.

Devices that emit radio frequency (RF) energy, such as AM/FM radios, mobile telecommunications systems (two-way radios, telephones) and radio-controlled security systems, are subject to the rules and regulations of the Federal Communications Commission (FCC) 47 CFR Parts 2 and 15. Any such system installed in a vehicle should comply with those rules and should be installed only by a qualified technician. In addition, to ensure continued compliance with the FCC's regulations, RF devices must not be modified or changed in a manner not expressly approved by Ford Motor Company.

Mobile communication systems, particularly if not properly installed, may adversely affect vehicle operation. For example, such systems, when operated, may cause the engine to stumble or stall. In addition, such systems themselves may be damaged, or their operation affected by the operation of the vehicle. (Citizens Band [CB] transceivers, garage door openers, and other transmitters whose power output is 5 watts or less, ordinarily will NOT affect vehicle operation.)

Because Ford has no control over the operation or manufacture of such systems, or their installation, Ford cannot assume responsibility for any adverse effects or damage, if this equipment is used.

Similar radio regulations are in place in Canada: see, e.g., Radio Standards Specification RSS-119 and Radio Standards Procedure RSP-100.

VEHICLE NOISE REGULATIONS/EMISSION CONTROL MODIFICATIONS

NOISE CONTROL MODIFICATIONS

All new Ford Motor Company trucks over 4536 kg (10,000 lb) GVWR (other than stripped chassis) manufactured for use in the United States are designed to comply with the U.S. Environmental Protection Agency's Medium and Heavy Truck Noise Emission Standards (40CFR Part 205). Information pertinent to these noise emission standards appears in the *Ford Truck Owners' Guide* and *Maintenance Schedule and Record Log* supplied with each Ford vehicle. Sections of the Guide that specifically relate to the Federal noise regulations are:

1. A statement entitled "Tampering with Noise Control System Prohibited," prescribed by Environmental Protection Agency regulation (40 CFR § 205.58-2(b)), and a list of acts, commission of any of which may be presumed to constitute tampering (Tampering List).
2. Instructions for the maintenance, use and repair of the vehicle to minimize noise emission degradation* and
3. A section reserved for recording what maintenance was done, by whom, where and when.

* *For trucks powered by diesel engines, the engine manufacturer's operation and maintenance manual, supplied with the vehicle, should also be consulted.*

In planning vehicle modifications, the Tampering List should be consulted to identify those parts or systems where the alteration or removal is likely to affect the truck's compliance with the Noise Emission Standards. In addition, prospective modifications not mentioned in the Tampering List may increase the noise emissions of the truck to an impermissibly high level. The Federal regulations require regulated trucks completed by a subsequent-stage manufacturer for use in the United States, to conform to these standards. The Federal Noise Control Act of 1972, as amended, provides civil penalties for distribution in commerce by a manufacturer of non-complying trucks, and criminal penalties where such distribution is willful or knowing. Advice concerning compliance with noise regulations should be obtained from your legal counsel.

A compliance label (see sample) is affixed to each Ford truck regulated by the Federal Noise Regulations

.

VEHICLE NOISE EMISSION CONTROL INFORMATION

FORD MOTOR COMPANY

The Vehicle Conforms to U.S. Regulations for Noise Emission Applicable to Medium and Heavy Trucks.

The Following acts or the causing thereof by any person are prohibited by the Noise Control Act of 1972: (A) The removal or rendering inoperative, other than for purposes of maintenance, repair or replacement, of any noise control device or element of design (listed in the owner's manual) incorporated into this vehicle in compliance with the Noise Control Act; (B) The use of this vehicle after such device or element of design has been removed or rendered inoperative.

'Month and Year of Mfr.'
SAMPLE

BB0526

EMISSION CONTROL MODIFICATIONS

All new Ford Motor Company trucks, vehicles, and engines are certified by the U.S. Environmental Protection Agency and/or by the California Air Resources Board (CARB) for compliance with applicable government emission control regulations. A copy of the appropriate *Ford Truck Owner's* or *Operator's Manual and Warranty Facts Booklet* must be installed in every vehicle prior to sale to the ultimate purchaser in order to provide emission systems warranty and maintenance schedules.

CAUTION

2003 MODEL YEAR VEHICLES ARE EMISSION CERTIFIED FOR REGISTRATION IN SPECIFIC AREAS OF THE UNITED STATES. FOR EXAMPLE, **VEHICLES CERTIFIED AND LABELED FOR SALE IN CALIFORNIA MAY NOT BE SOLD IN THE STATES THAT REQUIRE FEDERALLY CERTIFIED VEHICLES AND VEHICLES CERTIFIED TO FEDERAL STANDARDS MAY NOT BE SOLD IN STATES THAT REQUIRE CALIFORNIA CERTIFIED VEHICLES.** IT IS THE SUBSEQUENT STAGE MANUFACTURER'S RESPONSIBILITY TO PURCHASE A VEHICLE CERTIFIED FOR THE STATE/AREA IN WHICH THE VEHICLE WILL BE SOLD. EPA HAS STATED THAT UNDER CERTAIN CIRCUMSTANCES THEY WILL NOT ENFORCE THESE REQUIREMENTS. FOR FURTHER GUIDANCE, CONSULT EPA'S "POLICY ON CROSS BORDER SALES OF CALIFORNIA VEHICLES."

Modifications, revisions or removal of components may affect the emissions certification status of the vehicle and could cause the body builder, installer or any other subsequent modifier to be considered a manufacturer for purposes of emissions certification, warranty and recall. Modification of the emission control system may result in civil or criminal liability under federal, state, or provincial law. To avoid any question of certification coverage, approval of any modification, revision or removal of components should be sought from the Environmental Protection Agency, California Air Resources Board or Canadian Department of Transportation, as applicable. Advice concerning compliance with applicable standards and regulations should be obtained from your legal counsel.

EMISSION COMPLIANCE

When ordering a vehicle, the body builder must ensure that the vehicle emissions system purchased complies with appropriate emission regulations. Failure to order such a vehicle could result in the inability to register the vehicle in the area of intended use. Examples of areas requiring specific emissions certification are Altitude, SLA-Civil, California, Federal and states adopting California Emissions Regulations.

FUEL VAPOR RECOVERY

The California Air Resources Board has adopted regulations "Specifications for Fill Pipes and Openings of Motor Vehicle Fuel Tanks" requiring that all 1977 and later model year gasoline-powered motor vehicles offered for sale in that state meet certain specifications for fill pipes and fuel tank openings.

EMISSION CONTROL MODIFICATIONS

Curb Weight and Frontal Area Restrictions

Vehicle modifiers that add weight to a vehicle or increase the frontal area of a vehicle prior to sale and delivery to the ultimate purchaser may be considered manufacturers for emission purposes (including responsibility for emissions warranty, recall and in-use compliance) and may be required to recertify the vehicle for compliance with applicable federal or California emissions standards.

Federally Certified Vehicles with a GVWR of 8500 Lb or Less

According to U.S. Environmental Protection Agency (EPA) guidance, for all federally certified vehicles and trucks (8500 lb GVWR or less), a vehicle modifier will not be deemed to be a manufacturer, and will not be requried to obtain a separate Certificate of Conformity for a modified vehicle, if the following conditions are met:

1. The modified vehicle conforms in all material respects to the design specifications in the original manufacturer's application for certification; and
2. The weight of the modified vehicle, including the weight of fuel at nominal tank capacity, is no more than 500 lb above the maximum vehicle weight.

"Maximum vehicle weight" for a given vehicle is determined by (A) Subtracting 300 lb from the highest loaded vehicle weight (see 40 CFR 86.079-2 for loaded vehicle weight definition and the table at 40 CFR 86.129-80) associated with the test weight listed in the Application for Certification for the vehicle in question; and (B) Adding the weight of all options (in the case of mutually exclusive options only the weight of the heavier option is used) that are offered by the original manufacturer for the applicable truck line that were not included in the curb weight reported in the Application. Vehicle modifiers can refer to the *Ford Source Book* to determine loaded vehicle weights and option weights for Ford vehicles.

EPA guidance provides that no frontal area restrictions will apply to secondary manufacturers that comply with the conditions listed above.

NOTE: The information above is derived from guidance contained in U.S. EPA MSAPC Advisory Circular No. 64 (March 7, 1977) and a letter dated July 13, 1979 from Charles N. Freed, EPA Director, Mobile Source Enforcement Division to Maurice H. McBride, Legal Counsel, Recreational Vehicle Industry Association. Vehicle modifiers should refer to these documents directly for specific guidance regarding whether vehicle modifications are within the scope of the original applicaiton for certification. Vehicle modifiers should periodically consult with legal counsel to determine whether these documents have been amended or superseded and whether additional guidance exists.

Vehicles (14,000 lb GVWR or less) Certified for Sale, Registration or Use in California

Modifications to passenger cars, trucks, and vehicles (14,000 lb GVWR or less) intended for sale, registration, or use in California will be deemed to be within the original emissions certification only if such modifications do not:

1. increase vehicle weight more than 10 percent above the curb weight, increase frontal area more than 10 percent, or result in a combination increase of weight plus frontal area of more than 14 percent; or
2. include changes in axle ratio, tire size, or tire type resulting in changes in the drivetrain ratio of more than 5 percent; or
3. include any modification to the emission control system.

Modified vehicles that do not satisfy these conditions may not be sold to an ultimate purchaser, offered or delivered for sale to an ultimate purchaser, or registered in California unless the modified vehicle is certified by the California Air Resources Board pursuant to applicable emissions requirements. The vehicle modifier is responsible for obtaining such certification. Refer to "California Exhaust Emission Standards and Test Procedures for 1988 and Subsequent Model Passenger Cars, Trucks, and Vehicles."

IMPORTANT:
The information above is provided as guidance only. Vehicle modifiers are responsible for compliance with applicable emissions, regulations, including recertification if necessary. Modifiers should refer to the documents referenced above for additional guidance. Questions regarding the above requirements should be directed to your legal counsel, the EPA, or the California Air Resources Board. **In no case can vehicle weight exceed the UVW in Table A, page 214 (Super Duty F-Series), or Table A, page 215 (Ranger), without also recertifying for F/CMVSS No. 105, 135, 204, 208, 212, 219, 301, and 303.**

Incomplete vehicles using engines which are certified as heavy duty engines will not have frontal area or curb weight restrictions based on exhaust emissions regulations. It is important, however, that the final stage manufacturer observe vehicle restrictions from vehicle safety requirements, etc., which are located in the *Incomplete Vehicle Manual*.

WARNING

Any modification should not cause a vehicle to fit into a different weight class, (See Safety/Emission, page 54 for a discussion against revising GAWR). Doing so may require recertification to both FMVSS and Emissions Standards. Also, this type of change voids Ford's warranty.

Modifications not specified by Ford, such as changes to the exhaust system, tire size, axle ratio, fuel system, etc., could adversely affect emissions performance of the vehicle and require emissions recertification by the modifier. More details are shown below.

Light-Duty Trucks/Medium-Duty Trucks/Some Heavy-Duty Trucks – Chassis Certified

Includes Ranger, Windstar, E-Series, and F-150 up through 3856 kg (8500 lb) for Federal, California, and Canada.

Examples of emission related parts:

- Engine Assembly
- Air Intake System including Air Cleaner, Duct, Valve, Heat Stove, and Cold Air Inlet Tube
- All EGR, Catalytic Converter(s), Thermactor, or any other emission control system components[3/4/]
- Transmission including Vacuum Control System
- Axle Ratio
- Tire Size (other than available options)
- Fuel Pump and Lines
- Fuel Tank[5/6/]
- Fuel Economy Rating (as printed on vehicle invoice as applicable[7/]
- Filler and Vent Tube Assembly and Hose[5/6/8/]
- Vapor Control Orifice and/or Float Valve Assembly
- Vapor Control Orifice Seal[5/]
- Vapor Delivery Lines/Hoses/Clamps[5/]
- Fuel Vapor Purge Line[5/]
- Fuel Filler Pipe, Cap, and surrounding Sheet Metal[5/6/8/]
- Carbon Canister(s) and Hoses[5/]
- Exhaust Inlet and Outlet Pipe and Attaching Nuts[8/]
- Exhaust System Joint Clamps/Suspension/Bracket Assemblies[3/]
- Muffler[3/4/]
- Tailpipe[3/4/]
- Important Vehicle Information Label
- Emission Control Information Label[2/]

Heavy-Duty Engine / Vehicles – Gasoline Powered and Diesel Powered – Engine Certified

Includes all vehicles over 8500 lb GVWR, both Federal and California Medium-Duty vehicle category.

Examples of emission related parts:

- Engine Assembly[10/]
- Fuel System
- Air Intake System, including Air Cleaner, Duct, Valve, Heat Stove, and Cold Air Inlet Tube
- All EGR, Catalytic Converter(s), Thermactor or any other emission control system components[3/4/]
- Exhaust Inlet and Outlet Pipes[3/4/]
- Muffler[3/4/]
- Tailpipe[3/4/]
- Important Engine Information Label
- Emission Control Information Label[2/]
- All gasoline powered units require an evaporative emission control system. Damage to or mislocation of any of the following elements of the evaporative emission control system may render the system inoperative, may invalidate the vehicle emission control system certification, and may result in the release of flammable gasoline fumes.
- Fuel Tank[5/6/]
- Fuel Filler Pipe and Vent Tube Assembly, Hose, Cap, and surrounding sheet metal[5/6/8/]
- Vapor Control Orifice Seal[5/]
- Vapor Delivery Lines/Hoses/Clamps[5/]
- Fuel Vapor Purge Line[5/]
- Carbon Canister(s) and Hoses[5/]
- Vapor Seal in Fuel Tank
- Fastener Seals on All Components Attached to Fuel Tank
- Vapor Control Valves, Solenoids, and Related Wiring in Engine Compartment or Adjacent Thereto
- Vehicle Emission Control Label 49 States Only[9/]

EMISSION CONTROL MODIFICATIONS

Heavy-Duty Engine / Vehicles – Gasoline Powered and Diesel Powered (Cont'd)

1/ For important information regarding radio frequency interference (RFI), see Radio Frequency Interference in the Appendix section of this book. Note particularly that Canada has RFI regulations.

2/ **EMISSION CONTROL INFORMATION LABEL**
To meet United States Environmental Protection Agency regulations, the important vehicle information (tune-up and fuel tank capacity) labels must be affixed in a location that is readily visible after installation and in such a manner that it cannot be removed without destroying or defacing the label. The label shall not be affixed to any equipment that is easily detached from such vehicle.
When emission control labels are supplied but not attached to the vehicle (i.e., tune-up label or fuel tank label), they must be permanently mounted in a readily visible location to meet the preceding requirements. In addition, whether the label is already affixed or to be affixed, no components shall be installed which visibly obscure the label in any way that fails to satisfy the visibility requirements described in the California Emission Control Label Specifications.

CALIFORNIA FUEL VAPOR RECOVERY

California regulations require that the vehicle fuel systems be designed to accommodate a vapor recovery fueling nozzle including unobstructed access to the fill pipe. Fuel filler pipes installed per the sketches on page 119 for E-Series and pages 175-176 for Super Duty F-Series, will comply with the "Specifications For Fill Pipes and Openings of Motor Vehicle Fuel Tanks" referenced in Title 13 California Administrative Code provided no part of the aftermarket body, as installed, intrudes within a 254 mm [10 in] radius cylinder which has its axis parallel to the ground, passing through point "Z" and extends outward from the Ford supplied fuel pipe housing component. The fuel pipe housing component is shown on the referenced figures and is attached to the aftermarket body via 4.76 mm [0.188 in] diameter rivets. Fuel filler pipes installed, using the alternative bracket shown in the sketches on Super Duty F-Series, pages 175-176, will comply with the above California vapor recovery regulations provided the aftermarket body does not interfere with the access zone as described by the California Air Resources Board, and the areas adjacent to this opening cannot foreseeably damage the nozzle bellows or face plate of nozzles during insertion, latching, disposing, or removal.

CALIFORNIA MOTOR VEHICLE EMISSION CONTROL LABEL

To meet California emission certification regulations, the Emission Control Information (tune-up) label must be welded, riveted, or otherwise permanently attached to an area within the engine compartment or to the engine in such a way that it will be readily visible to the average person after installation of the engine in a vehicle. In selecting an acceptable location, the manufacturer shall consider the possibility of accidental damage (e.g., possibility of tools or sharp instruments coming in contact with the label). The label shall be affixed in such a manner that it cannot be removed without destroying or defacing the label, and shall not be affixed to any part which is likely to be replaced during the vehicle's useful life. For motor vehicles rated at 3856 kg (8500 lb) GVWR or less, the label shall not be affixed to any equipment which is easily detached from the vehicle. The tune-up label must include the heading "Important Vehicle Information" for Medium-Duty trucks. As used in these specifications, readily visible to the average person shall mean that the label shall be readable from a distance of 460 cm [18 in] without any obstructions from vehicle or engine parts (including all manufacturer available optional equipment), except for flexible parts, (e.g., vacuum hoses, ignition wires). Alternately, information required by these specifications to be printed on the label shall be no smaller than 8 point type size provided that no vehicle or engine parts, (including all manufacturer available optional equipment), except for flexible parts that can be moved out of the way without disconnection, obstruct the label.

Completed vehicles for retail sale in California require a machine-readable vehicle identification number (VIN) bar-code label made of paper, plastic, metal, or other permanent material which shall be affixed in a readily visible location to either the door-latch post next to the driver's seating position, the door edge that meets this door-latch post, or above the instrument panel in a location clearly visible through the lower left corner of the windshield.

- All Incomplete Vehicles except Stripped Chassis Type Vehicles will conform to this standard.
- Stripped Chassis Type Vehicles:
  Conformity with CARB Motor Vehicle Emission Control Label specifications for VIN label is not substantially affected by the design of this incomplete vehicle. Accordingly, Ford Motor Company makes no representation as to conformity with this requirement. To assist a subsequent stage manufacturer with conforming to this specification, Ford is providing a label which will accompany the *Incomplete Vehicle Manual* inside the protective plastic bag located in the dunnage box.

For the VEC† and VIN labels, sufficient clearance shall be provided to use a non-contact bar-code Reading Wand. For the tune-up label and vacuum hose routing diagram label, the label and any adhesives used shall be designed to withstand, for the vehicle's total expected life, typical vehicle environment conditions in the area where the label is attached. Typical vehicle environmental conditions shall include, but are not limited to, exposure to engine lubricants and coolants (e.g., gasoline, motor oil, brake fluids, water, ethylene glycol), underhood temperatures, steam cleaning, and paints or paint solvents.
To meet U.S. Environmental Protection Agency important engine regulations, the Vehicle Emission Control Information of the Important Vehicle Information label (also referred to as the tune-up label) must be affixed in a readily visible location. The tune-up label must include the heading "Important Vehicle Information" or "Important Engine Information". See sample labels on the following page.
When the tune-up label is supplied detached from the engine (with the operator's manual), it must be permanently mounted in a readily visible location to meet the preceding requirements. In addition, whether the label is already affixed or to be affixed, no components shall be installed which visibly obscure the label in any way such that the preceding requirements are not satisfied.

3/ Some model trucks of Ford Motor Company built since 1981 may exhibit higher engine compartment and exhaust system temperatures in some operating modes than in previous model years. Components, including exhaust heat shielding systems, have been installed on some vehicles in our assembly plants in an effort to provide greater protection against such temperatures. Subsequent manufacturers are responsible for providing thermal protection for any structure and/or equipment added to the vehicle and should not remove any components and/or exhaust heat shielding installed on the vehicles by Ford.

4/ The back pressure at the exhaust manifold **must not** be changed, and vehicle noise intensity (dbA) **must not** be allowed to increase. Catalytic converter **must not** be relocated.

5/ If a subsequent manufacturer desires to modify or add to the evaporative emission control system, or add permanent gasoline fuel tank(s) or an evaporative emission control system to a vehicle required to have an evaporative emission control system, the subsequent manufacturer is responsible for installing an appropriate evaporative emission control system. See pages 49-51 of this section for recommendations. U.S. Environmental Protection Agency (EPA) approval and California Air Resources Board (CARB) approval (for all vehicles which will be delivered for sale and primary use in California) must be obtained by the subsequent manufacturer for any evaporative emission control system installed or modified by the subsequent manufacturer.

6/ **Must not** be altered such that CARB fuel vapor recovery regulations are not met.

7/ May not be removed until after sale to ultimate customer. Also see Frontal Area and Curb Weight considerations (above).

8/ Any rerouting or change in materials cannot be made unless approval is obtained from the California Air Resources Board (CARB) and/or the U.S. Environmental Protection Agency (EPA). Unleaded fuel filler pipe restrictions may not be removed.

9/ To meet U.S. EPA Regulation, the Vehicle Emission Control Information label must be affixed in a readily visible location. See sample labels on the following page.

10/ The check engine light is required by emissions regulations. It is installed by Ford Motor Company in all vehicles except the commercial stripped chassis. For this vehicle, it is located in the instrument cluster shipped in the dunnage box. The final stage manufacturer must install this light. For information regarding installation of Check Engine Warning Light to the E-350 Stripped Chassis model, see page 207, adding Lights and Electrical Devices.

† Vehicle Emission Control

EVAPORATIVE EMISSIONS

All Ford Trucks are required to comply with evaporative emissions requirements established by the U.S. Environmental Protection Agency or the California Air Resources Board. Production fuel systems supplied on incomplete vehicles manufactured by Ford Motor Company comply with applicable requirements. **If the subsequent manufacturer adds to or modifies the fuel system in any manner, it becomes that manufacturer's responsibility to assure compliance with the applicable Federal or California emissions standards. See pages 49-51 of this section.**

SERVICE ENGINE SOON – WARNING LIGHT

The service engine soon warning light is used to indicate malfunctions of the Electronic Engine Control System and certain emissions related components. For all incomplete vehicles **except** Stripped Chassis (which is not equipped with an instrument panel), it is Ford installed and operational.

The Stripped Chassis vehicle has the warning light installed in the instrument cluster, which is shipped in the dunnage box. If an alternate instrument cluster is utilized, the final stage manufacturer must install an operational light in the instrument cluster. This light must glow amber and display the message "Service Engine Soon" or "Check Engine". It should be recognized that this light is a requirement of emission certification.

POWER TAKE-OFF CIRCUIT

An underhood wire labeled "Power Take-Off Circuit" is provided to minimize the inadvertent illumination of the "Service Engine Soon Light" while the PTO is engaged. See Figure A, page 199 of this book for the circuit location. Connect the underhood wire to the Power Take-Off Light Circuit as instructed on page 199 and isolate the wire labeled "Power Take-Off Circuit" from the solenoid to prevent damage to the Power Control Module (PCM).

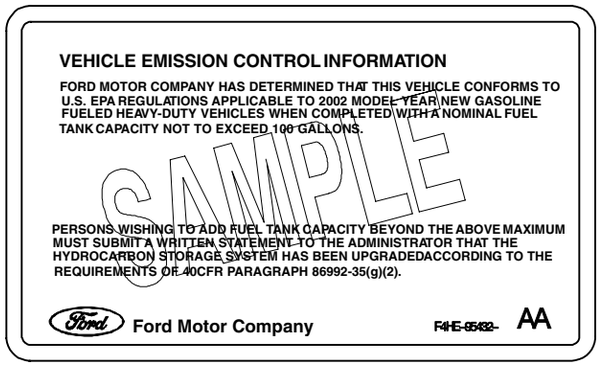

BB0434

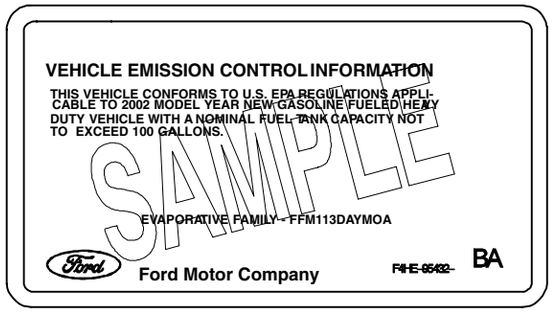

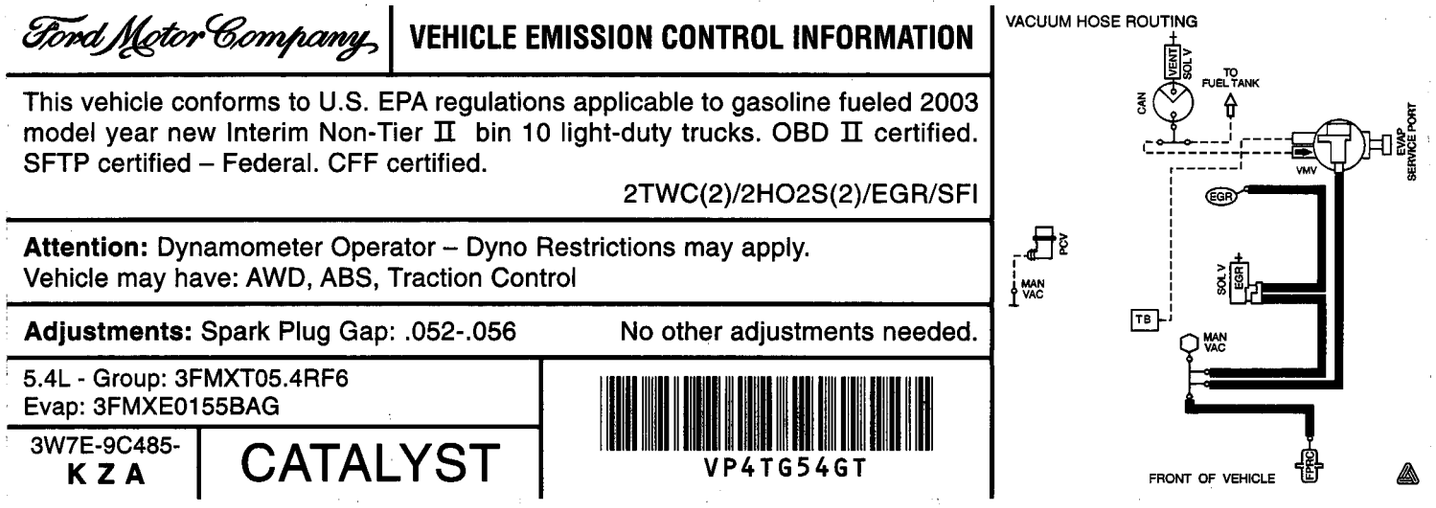

EMISSIONS COMPLIANCE GUIDELINES NON-OEM FUEL TANK MODIFICATIONS

These guidelines are applicable to those tanks designed to replace the Original Equipment Manufacturer (OEM) fuel tank for the purpose of increasing fuel capacity or to accommodate modifications to the vehicle. These tanks differ in design from the OEM tanks in terms of size, tank material, shape, location or purge strategy. Auxiliary fuel tanks are those tanks added on to the existing OEM tank(s) in order to increase the vehicle's fuel capacity.

WARNING:
Prohibitions Against Uncertified Vehicles, Devices and Tampering

Changes to the size, material, or shape of a fuel tank may cause the certified vehicle to exceed applicable evaporative emissions or not comply with OBD-II monitoring requirements. Such changes may constitute tampering. Changes made to accommodate the installation of non-OEM fuel tanks may also constitute tampering; these include changes in the Filler and Vent Tube Assembly and Hose, Fuel Vapor Purge Line, Vapor Control Orifice and/or Float Valve Assembly, Vapor Delivery Lines/Hoses/Clamps, etc.

Ford vehicles are certified as compliant with California's OBD-II (On-Board Diagnostic II) requirements. These requirements (among other diagnostic tests) check the evaporative emission control and fuel tank system for leaks. A decrease or increase in tank size or change in material and shape, may degrade the function of the evaporative leak monitor. Further, decreases below the 25 gallon threshold would make the vehicle ineligible for an alternative to the new 0.020" threshold. The 2001 Windstar with a 26 gallon tank is certified. Degrading of the evaporative leak detection monitor may constitute tampering.

Violation of the applicable Federal, State or Canadian Provincial Laws prohibiting tampering may result in civil or criminal liability.

Exemptions from Tampering Prohibitions for Fuel Tank Modifications

Only those modifications to the evaporative emission control system (which includes the fuel tank) or OBD-II system that are specifically approved or certified by EPA and/or CARB may be exempted from these tampering prohibitions. In general, to obtain an exemption, the aftermarket manufacturer or converter must demonstrate that the replacement or auxiliary fuel tank does not reduce the effectiveness of the vehicle's OBD-II and evaporative emission control systems. This demonstration may require an evaluation using the Federal Test Procedure and enhanced evaporative system test procedures to ensure compatibility with OBD-II system requirements as well as compliance with the applicable evaporative emission standards.

Any conversion made to the vehicle must comply with the applicable Federal and California on-board diagnostic (OBD) system regulations. Any changes that potentially affect the OBD system must be reported to the Agencies (EPA and/or CARB) for their review and approval.

General Information Relating to EPA/CARB Approval of Aftermarket Conversions

Any conversion made to the vehicle must comply with the applicable Federal and California Emission regulations and laws including EPA's Tampering Prohibition (See EPA Mobile Source Enforcement Memorandum 1A and Addendum thereto as revised at 63 FR 32878) or obtain an "Exemption for Aftermarket from Tampering Prohibition" under Subpart F, 40CFR85. For California, please refer to CARB Mail Out #96-27, subject: "Sales and Installation of Replacement (and Auxiliary) Fuel Tanks", dated September 9, 1996. (See the Section of this Layout Book entitled "Vehicle Noise Regulations/Emissions Control Modifications" for a further explanation of the potential liabilities for the modifier.)

CARB Website

To apply for specific VC 27156 exemptions from the ARB for aftermarket conversions including non-OEM fuel tank replacement, contact Ms. Rose Castro, Manager, Aftermarket Parts Section, at 818-575-6848 or e-mail at rcastro@arb.ca.gov. CARB consumer information on aftermarket performance and add-on parts can be found at the following website:
http://www.arb.ca.gov/msprog/aftermkt/aftermkt.htm

Website

To apply for an exemption from the tampering provisions of the Clean Air Act, contact Mr. Steven Albrink (albrink.steve@epa.gov) on 202-564-8997. EPA information concerning the conditions that must be satisfied to obtain an EPA exemption for an aftermarket conversion from the tampering prohibition contained in Section 203 of the Clean Air Act can be found at the Code of Federal Regulations and using the search option: http://www.access.gpo.gov/nara/cfr/.

Ford and SEMA Website

Ford Motor Company and the Specialty Equipment Market Association (SEMA) have established a Powertrain Technology Initiative (PTI) for OBD-related products. PTI provides manufacturers of performance aftermarket equipment with the opportunity to obtain custom-developed software calibrations needed for the proper use and installation of aftermarket products which could affect emissions, OBD compliance, emission compliance and durability, fuel requirements, exhaust temperatures, etc. If these categories are significantly affected, a calibration modification may be appropriate. PTI has established a website by which an aftermarket converter can learn how to obtain the custom calibration for its conversion. The PTI website explains the purpose of the PTI program, how PTI works, basic criteria for approval, what are the steps and expected turnover time, and what are the costs. The PTI website is: http://www.sema.org/

General OBD Monitoring Requirements:

The EPA has regulations in place establishing requirements for on-board diagnostic (OBD) systems on light duty vehicles and light duty trucks beginning with the 1994 model year. The purpose of the OBD system is to assure proper emission control system operation for the vehicle's lifetime by monitoring emission-related components and systems for deterioration and malfunction.
NOTE: California has slightly different OBD requirements from EPA's OBD requirements; however, systems designed to meet California's requirements are also accepted by EPA as meeting the federal requirements.

What is OBD and How Does It Work?

Automobile manufacturers developed the first OBD systems in the early 1980's as electronic systems replaced mechanical systems. The engines in today's vehicle are largely electronically controlled. Sensors and actuators sense the operation of specific components (e.g., the oxygen sensor) and actuate others (e.g., the fuel injectors) to maintain optimal engine control. An on-board computer, known sometimes as a "powertrain control module" or an "engine control unit" controls all of these systems.

With proper software, the on-board computer is capable of monitoring all of the sensors and actuators to determine whether they are working as intended. It can detect a malfunction or deterioration of the various sensors and actuators, usually well before the driver becomes aware of the problem through a loss in vehicle performance or drivability. The sensors and actuators, along with the diagnostic software in the on-board computer, make up what is called "the OBD system".

OBD monitoring requirements include the following systems: catalyst, misfire, evaporative, secondary air, air conditioning system refrigerant, fuel, oxygen sensor, Exhaust Gas Recirculation (EGR), Positive Crankcase Ventilation (PCV), thermostat monitoring, and comprehensive component monitoring.

Sources of Information on OBD Regulations:

For a comprehensive description of the regulations governing OBD systems, visit the EPA and CARB websites shown below.
(EPA) http://www.epa.qov/otaq/obd.htm
(CARB) http://www.arb.ca.gov/msprog/obdprog/obdprog.htm

EVAPORATIVE EMISSIONS

All Ford Trucks are required to comply with evaporative emissions requirements established by the U.S. Environmental Protection Agency or the California Air Resources Board. Production fuel systems supplied on incomplete vehicles manufactured by Ford Motor Company comply with applicable requirements. **If the subsequent manufacturer adds to or modifies the fuel system in any manner, it becomes that manufacturer's responsibility to assure compliance with the applicable Federal or California emissions standards. See pages 49-51 of this section.**

SERVICE ENGINE SOON – WARNING LIGHT

The service engine soon warning light is used to indicate malfunctions of the Electronic Engine Control System and certain emissions related components. For all incomplete vehicles **except** Stripped Chassis (which is not equipped with an instrument panel), it is Ford installed and operational.

The Stripped Chassis vehicle has the warning light installed in the instrument cluster, which is shipped in the dunnage box. If an alternate instrument cluster is utilized, the final stage manufacturer must install an operational light in the instrument cluster. This light must glow amber and display the message "Service Engine Soon" or "Check Engine". It should be recognized that this light is a requirement of emission certification.

POWER TAKE-OFF CIRCUIT

An underhood wire labeled "Power Take-Off Circuit" is provided to minimize the inadvertent illumination of the "Service Engine Soon Light" while the PTO is engaged. See Figure A, page 199 of this book for the circuit location. Connect the underhood wire to the Power Take-Off Light Circuit as instructed on page 199 and isolate the wire labeled "Power Take-Off Circuit" from the solenoid to prevent damage to the Power Control Module (PCM).

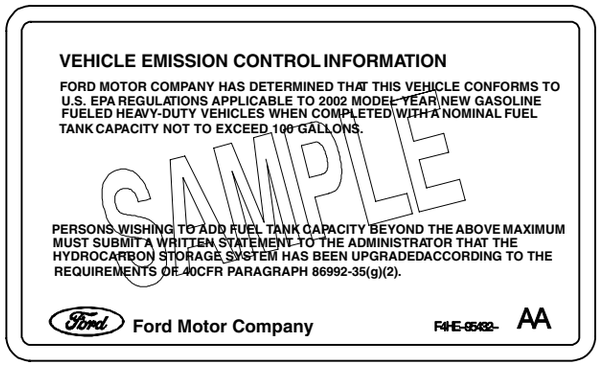

BB0434

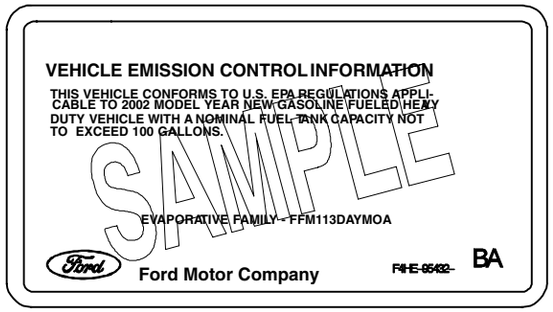

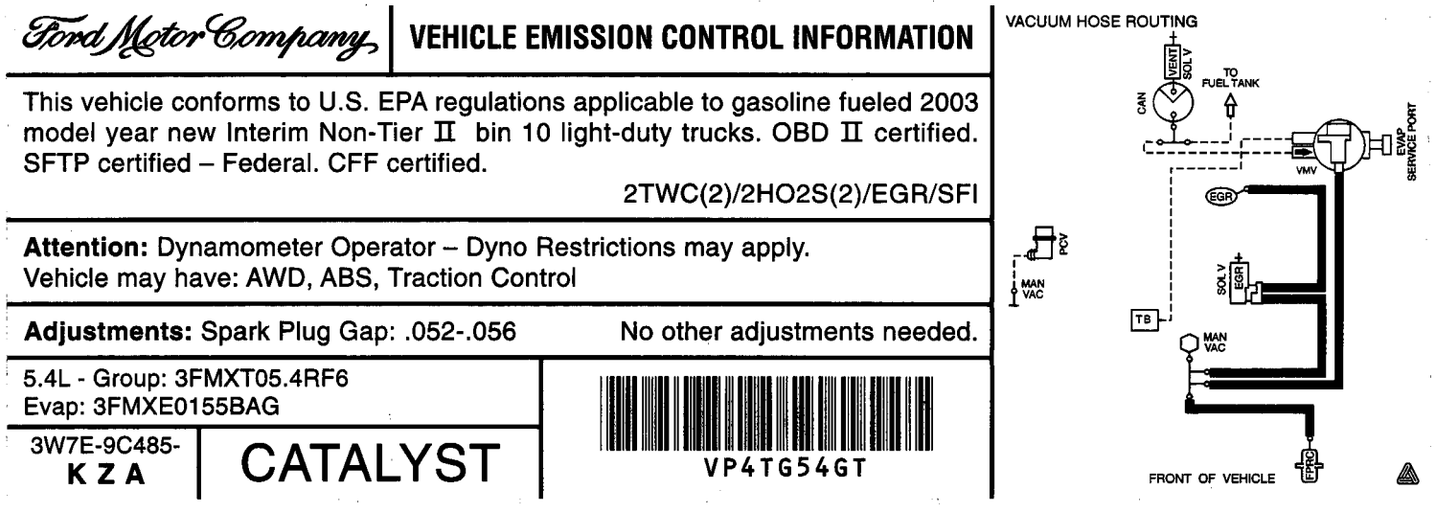

EMISSIONS COMPLIANCE GUIDELINES NON-OEM FUEL TANK MODIFICATIONS

These guidelines are applicable to those tanks designed to replace the Original Equipment Manufacturer (OEM) fuel tank for the purpose of increasing fuel capacity or to accommodate modifications to the vehicle. These tanks differ in design from the OEM tanks in terms of size, tank material, shape, location or purge strategy. Auxiliary fuel tanks are those tanks added on to the existing OEM tank(s) in order to increase the vehicle's fuel capacity.

WARNING:
Prohibitions Against Uncertified Vehicles, Devices and Tampering

Changes to the size, material, or shape of a fuel tank may cause the certified vehicle to exceed applicable evaporative emissions or not comply with OBD-II monitoring requirements. Such changes may constitute tampering. Changes made to accommodate the installation of non-OEM fuel tanks may also constitute tampering; these include changes in the Filler and Vent Tube Assembly and Hose, Fuel Vapor Purge Line, Vapor Control Orifice and/or Float Valve Assembly, Vapor Delivery Lines/Hoses/Clamps, etc.

Ford vehicles are certified as compliant with California's OBD-II (On-Board Diagnostic II) requirements. These requirements (among other diagnostic tests) check the evaporative emission control and fuel tank system for leaks. A decrease or increase in tank size or change in material and shape, may degrade the function of the evaporative leak monitor. Further, decreases below the 25 gallon threshold would make the vehicle ineligible for an alternative to the new 0.020" threshold. The 2001 Windstar with a 26 gallon tank is certified. Degrading of the evaporative leak detection monitor may constitute tampering.

Violation of the applicable Federal, State or Canadian Provincial Laws prohibiting tampering may result in civil or criminal liability.

Exemptions from Tampering Prohibitions for Fuel Tank Modifications

Only those modifications to the evaporative emission control system (which includes the fuel tank) or OBD-II system that are specifically approved or certified by EPA and/or CARB may be exempted from these tampering prohibitions. In general, to obtain an exemption, the aftermarket manufacturer or converter must demonstrate that the replacement or auxiliary fuel tank does not reduce the effectiveness of the vehicle's OBD-II and evaporative emission control systems. This demonstration may require an evaluation using the Federal Test Procedure and enhanced evaporative system test procedures to ensure compatibility with OBD-II system requirements as well as compliance with the applicable evaporative emission standards.

Any conversion made to the vehicle must comply with the applicable Federal and California on-board diagnostic (OBD) system regulations. Any changes that potentially affect the OBD system must be reported to the Agencies (EPA and/or CARB) for their review and approval.

General Information Relating to EPA/CARB Approval of Aftermarket Conversions

Any conversion made to the vehicle must comply with the applicable Federal and California Emission regulations and laws including EPA's Tampering Prohibition (See EPA Mobile Source Enforcement Memorandum 1A and Addendum thereto as revised at 63 FR 32878) or obtain an "Exemption for Aftermarket from Tampering Prohibition" under Subpart F, 40CFR85. For California, please refer to CARB Mail Out #96-27, subject: "Sales and Installation of Replacement (and Auxiliary) Fuel Tanks", dated September 9, 1996. (See the Section of this Layout Book entitled "Vehicle Noise Regulations/Emissions Control Modifications" for a further explanation of the potential liabilities for the modifier.)

CARB Website

To apply for specific VC 27156 exemptions from the ARB for aftermarket conversions including non-OEM fuel tank replacement, contact Ms. Rose Castro, Manager, Aftermarket Parts Section, at 818-575-6848 or e-mail at rcastro@arb.ca.gov. CARB consumer information on aftermarket performance and add-on parts can be found at the following website:
http://www.arb.ca.gov/msprog/aftermkt/aftermkt.htm

Website

To apply for an exemption from the tampering provisions of the Clean Air Act, contact Mr. Steven Albrink (albrink.steve@epa.gov) on 202-564-8997. EPA information concerning the conditions that must be satisfied to obtain an EPA exemption for an aftermarket conversion from the tampering prohibition contained in Section 203 of the Clean Air Act can be found at the Code of Federal Regulations and using the search option: http://www.access.gpo.gov/nara/cfr/.

Ford and SEMA Website

Ford Motor Company and the Specialty Equipment Market Association (SEMA) have established a Powertrain Technology Initiative (PTI) for OBD-related products. PTI provides manufacturers of performance aftermarket equipment with the opportunity to obtain custom-developed software calibrations needed for the proper use and installation of aftermarket products which could affect emissions, OBD compliance, emission compliance and durability, fuel requirements, exhaust temperatures, etc. If these categories are significantly affected, a calibration modification may be appropriate. PTI has established a website by which an aftermarket converter can learn how to obtain the custom calibration for its conversion. The PTI website explains the purpose of the PTI program, how PTI works, basic criteria for approval, what are the steps and expected turnover time, and what are the costs. The PTI website is: http://www.sema.org/

General OBD Monitoring Requirements:

The EPA has regulations in place establishing requirements for on-board diagnostic (OBD) systems on light duty vehicles and light duty trucks beginning with the 1994 model year. The purpose of the OBD system is to assure proper emission control system operation for the vehicle's lifetime by monitoring emission-related components and systems for deterioration and malfunction.
NOTE: California has slightly different OBD requirements from EPA's OBD requirements; however, systems designed to meet California's requirements are also accepted by EPA as meeting the federal requirements.

What is OBD and How Does It Work?

Automobile manufacturers developed the first OBD systems in the early 1980's as electronic systems replaced mechanical systems. The engines in today's vehicle are largely electronically controlled. Sensors and actuators sense the operation of specific components (e.g., the oxygen sensor) and actuate others (e.g., the fuel injectors) to maintain optimal engine control. An on-board computer, known sometimes as a "powertrain control module" or an "engine control unit" controls all of these systems.

With proper software, the on-board computer is capable of monitoring all of the sensors and actuators to determine whether they are working as intended. It can detect a malfunction or deterioration of the various sensors and actuators, usually well before the driver becomes aware of the problem through a loss in vehicle performance or drivability. The sensors and actuators, along with the diagnostic software in the on-board computer, make up what is called "the OBD system".

OBD monitoring requirements include the following systems: catalyst, misfire, evaporative, secondary air, air conditioning system refrigerant, fuel, oxygen sensor, Exhaust Gas Recirculation (EGR), Positive Crankcase Ventilation (PCV), thermostat monitoring, and comprehensive component monitoring.

Sources of Information on OBD Regulations:

For a comprehensive description of the regulations governing OBD systems, visit the EPA and CARB websites shown below.
(EPA) http://www.epa.qov/otaq/obd.htm
(CARB) http://www.arb.ca.gov/msprog/obdprog/obdprog.htm

The following suggestions are intended to assist in the design of gasoline fuel vapor control systems capable of meeting Federal Evaporative Emissions Standards. All Ford vehicles are equipped with evaporative emission control systems which are certified to the applicable standards. If the subsequent stage manufacturer adds to or modifies the gasoline fuel system in any manner, it becomes the responsibility of the subsequent stage manufacturer to assure compliance with the applicable standards.

The Environmental Protection Agency (EPA) has provided evaporative emission control system design upgrade requirements for federally regulated vehicles over 3856 [8500 lb] GVWR weight classes in 40 CFR 86.088-35 (g)(2). The following requirements are applicable when adding fuel tank capacity beyond the maximum specified on the label: 1} upgrade the vapor storage capacity in accordance with the formula below, and 2) notify the EPA of the change. Note that California has unique evaporative emission regulations and adherence to the EPA upgrade requirements does not satisfy California certification requirements. Subsequent stage manufacturers performing fuel system modifications to California vehicles must certify the vehicle as modified, to California evaporative emission standards.

A. EPA VAPOR STORAGE UPGRADE REQUIREMENTS

The additional amount of fuel vapor storage material required can be determined according to the following formula:

$$VSa = \left[VSi \times \frac{T\ Volume\ f}{Max\ Volume\ i} \right] - VSi$$

where: VSi = Initial amount of vapor storage material in grams installed on the vehicle. The initial amount of vapor storage can be determined by examining the vehicle. For Super Duty F-Series, carbon canisters will be mounted in the engine compartment on the driver side. E-Series carbon canisters will be mounted inside the frame as shown on pages 50-51. Ford vehicles will be equipped with one or two cylindrical shaped canister(s).

T Volume f = Final fuel tank capacity rating of the vehicle after the addition of the new fuel tank(s). This volume would be equal to the volume equipped with the vehicle plus the volume desired added.

Max Volume I = The Maximum fuel tank volume as specified on the VECI† label. The Super Duty F-Series label can be found in the engine compartment on the passenger side radiator support. (See Figure A.) The E-Series label can be found on the underside of the hood on the driver's side. The E-Series Stripped Chassis label can be found in the dunnage box and should be installed on the completed vehicle consistent with the guidelines on page 67 of the *Incomplete Vehicle Manual.*

VSa = The minimum final additional vapor storage material required in grams. Additional vapor storage material can be purchased at a local Ford dealer using the Ford Service Part Number (2800 ml - F75Z-9D653-A). See Figures B and C on this page for Super Duty F-Series canister identification and series system upgrade, respectively. E-Series canisters are shown on pages 50-51.

Additional vapor storage material must have the same absorbent characteristics as that used by Ford Motor Company.

The EPA requires that hoses for the vapor routing be at least as impermeable to hydrocarbon vapors as hoses used by Ford. Ford uses rubber hose per std. WSL-M96D33-A4. A typical auxiliary tank vapor line routing uses a short length of rubber hose to a 1/2-inch I.D. steel tube. The steel tube connects to another short length of rubber hose and then to a "Y" which connects to the standard tank vapor line.

† Vehicle Emission Control Information

The EPA requires that additional vapor device(s) be installed in series with the existing system such that the existing storage device(s) are between the fuel tank(s) and the new storage device(s). The existing storage device(s) should be routed to the new storage device(s) such that the existing storage device(s) are no longer vented to the atmosphere. The elevation of the original storage device(s) should be equal to or lower than the new storage device(s). Ford suggests that the diameter of the hose used to connect the additional storage device be large enough so as not to restrict purge flow which cleans out the canisters (1/2-inch I.D. hose from an existing one canister system, and 5/8-inch I.D. hose from an existing tow canister system in parallel).

B. EPA NOTIFICATION OF EVAPORATIVE EMISSION CONTROL SYSTEM UPGRADE

A written statement that the system has been upgraded should be forwarded to the EPA. The body of the letter should indicate that the provisions of 40 CFR 86.085-35(g)(2)(i)-(iv) have been complied with. A brief description of the modification may also be included. The correct mailing address for the EPA is:

Director of Certification
Office of Mobile Source Air Pollution Control
2565 Plymouth Rd.
Ann Arbor, MI 48105

IMPORTANT: Upgrading the evaporative emission system does not eliminate the necessity for compliance with the applicable safety requirements of FMVSS 301. A final stage manufacturer is responsible to certify the completed vehicle with any additional fuel tank(s) or any modification to the fuel system. The complete vehicle must conform to all applicable safety regulations.

SUPER DUTY F-SERIES WITH A GVWR OF OVER 3856 Kg (8500 LB)
5.4L AND 6.8L EFI-EQUIPPED VEHICLES

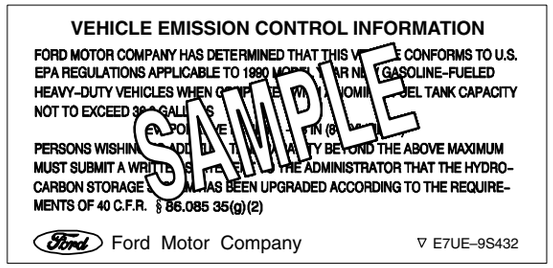

FIGURE A - TYPICAL EVAPORATIVE LABEL (49 STATES, NOT CALIFORNIA OR CANADA)

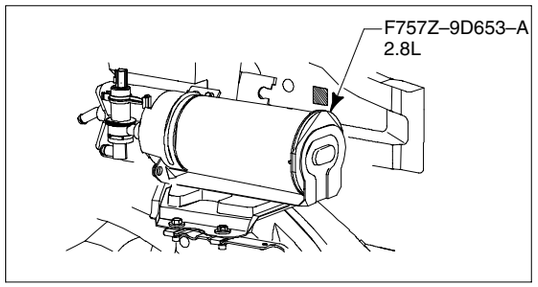

FIGURE B - CANISTER IDENTIFICATION SUPER DUTY F-SERIES

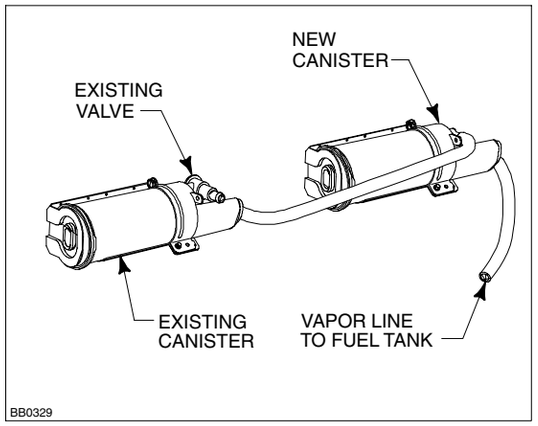

FIGURE C - TYPICAL DUAL CANISTER — SERIES SYSTEM UPGRADE SUPER DUTY F-SERIES

E-SERIES
FUEL SYSTEM EVAPORATIVE EMISSIONS

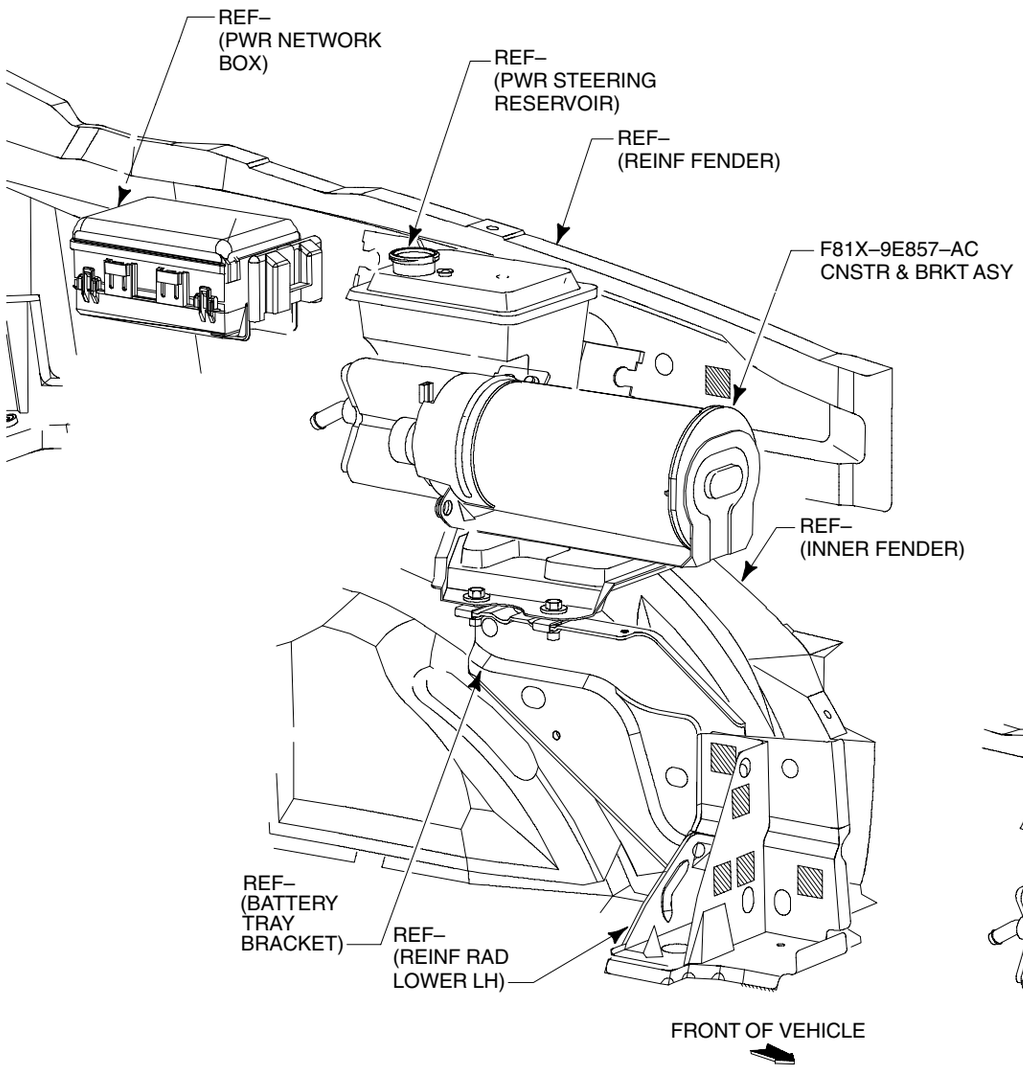

CANISTER LOCATION
4.2/5.4/6.8L GAS – 49 STATES
PICK–UPS / CHASSIS CABS

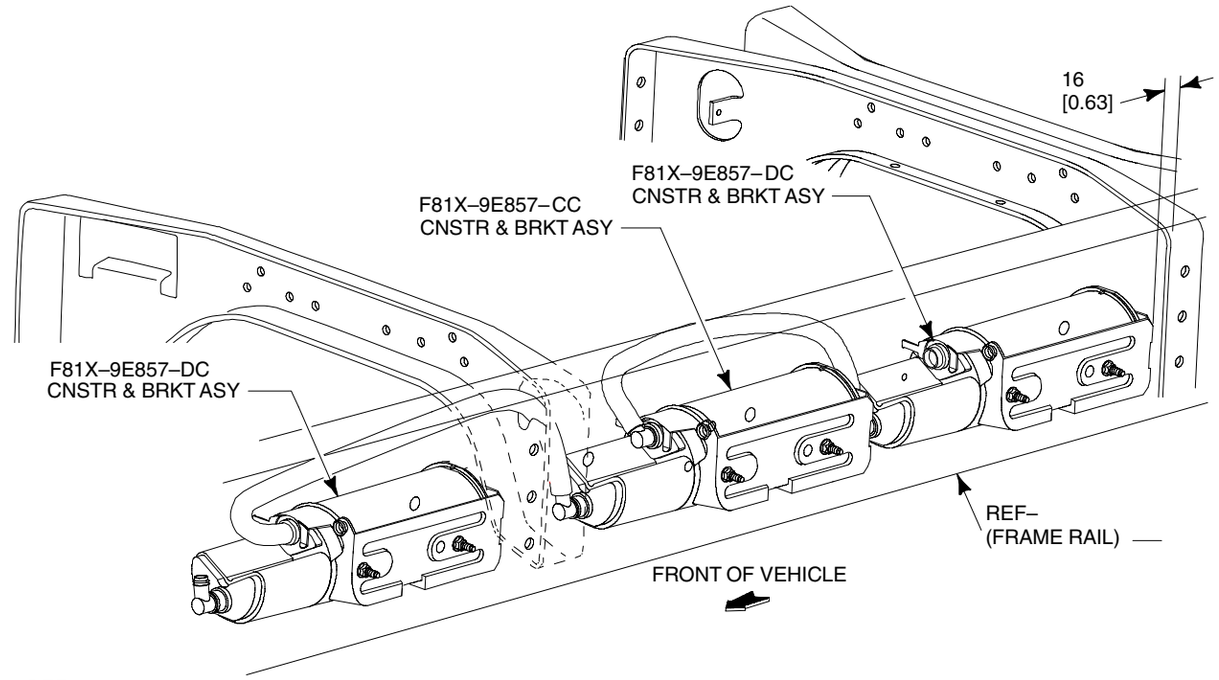

CANISTER LOCATION
CLASS A MOTOR HOME CHASSIS (F53)

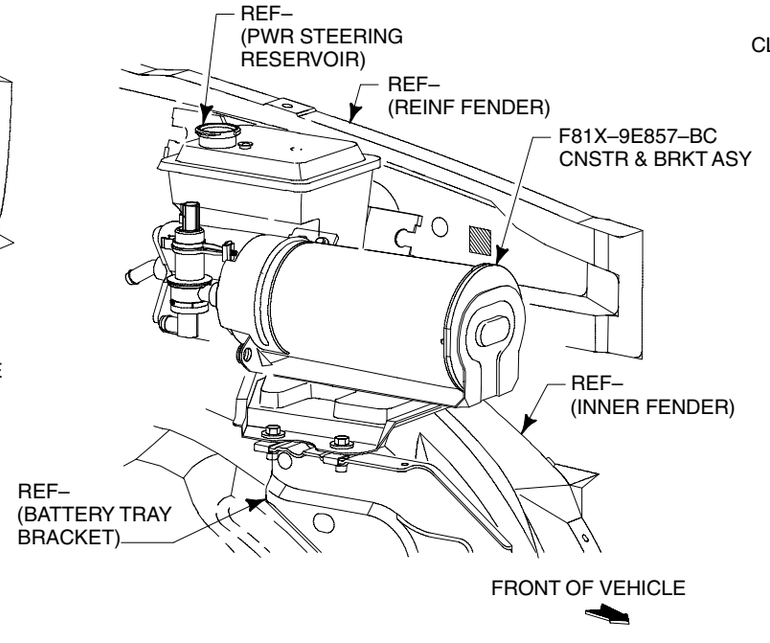

CANISTER LOCATION
CALIFORNIA ONLY
PICK–UPS / CHASSIS CABS

NOTES — [ ] DIMENSIONS ARE INCHES.
— SEE PAGE 182 OF MOTOR HOME CHASSIS (F53) SECTION FOR CARBON CANISTER'S LOCATION.

BB0321

E-SERIES
FUEL SYSTEM EVAPORATIVE EMISSIONS

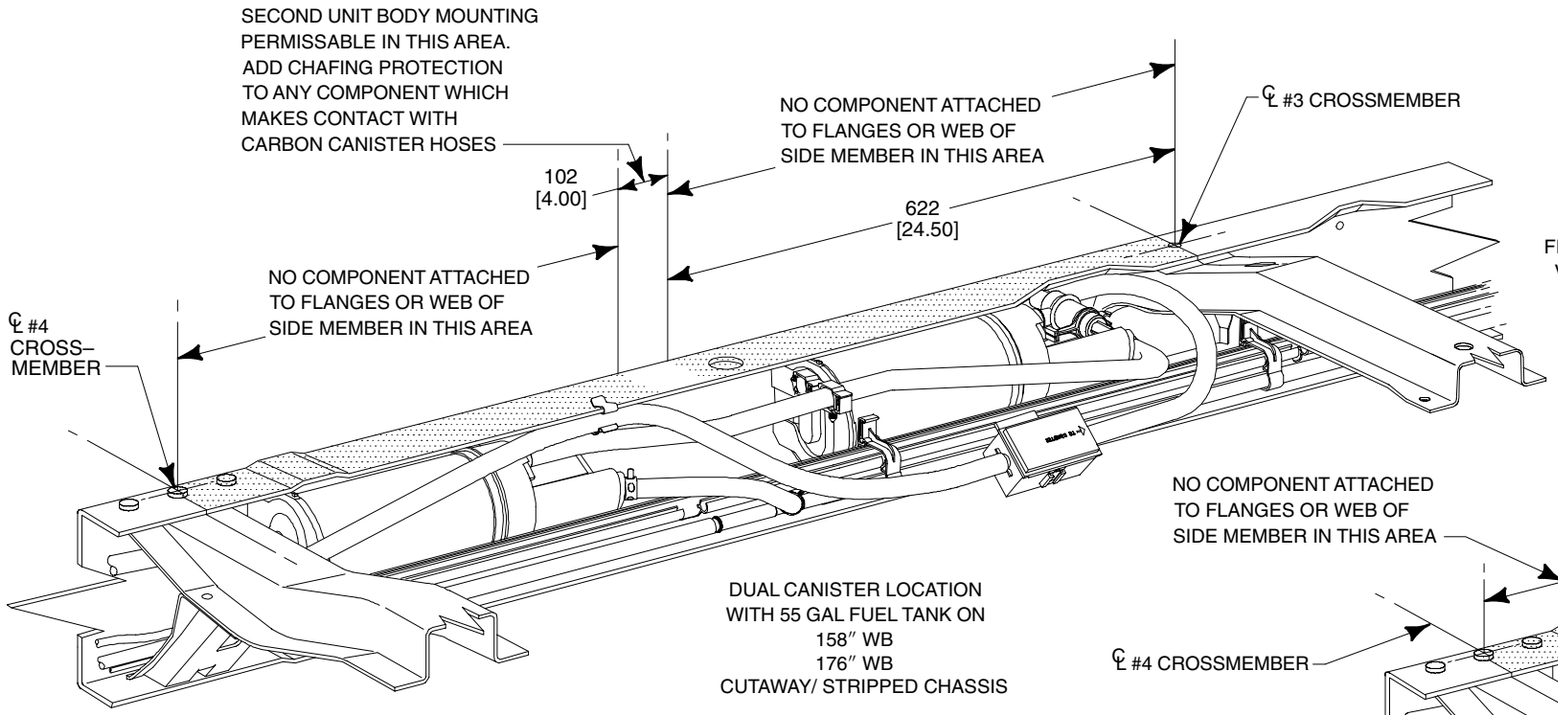

DUAL CANISTER LOCATION
WITH 55 GAL FUEL TANK ON
158″ WB
176″ WB
CUTAWAY/ STRIPPED CHASSIS

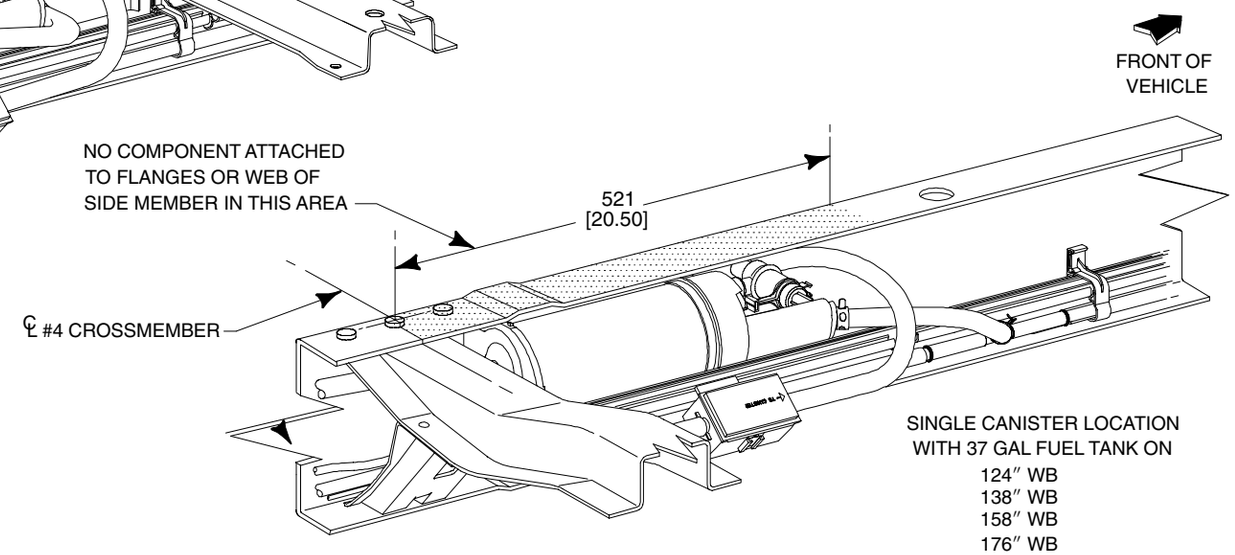

SINGLE CANISTER LOCATION
WITH 37 GAL FUEL TANK ON
124″ WB
138″ WB
158″ WB
176″ WB
CUTAWAY / STRIPPED CHASSIS

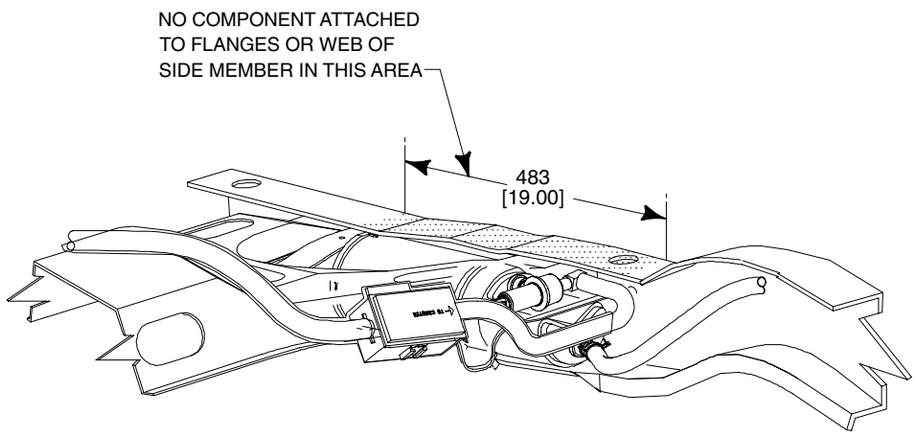

SINGLE REAR CANISTER LOCATION
FOR E-SERIES VAN/WAGON

FRONT OF VEHICLE

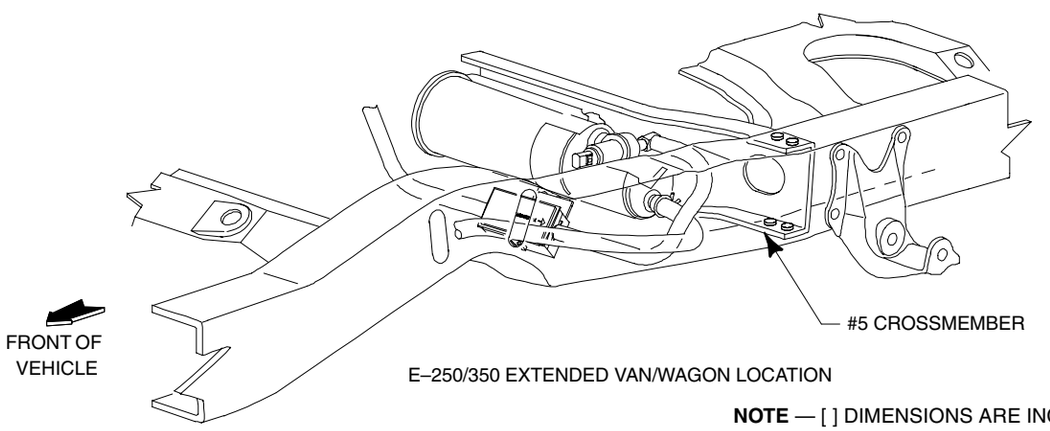

E–250/350 EXTENDED VAN/WAGON LOCATION

NOTE — [ ] DIMENSIONS ARE INCHES
FOR E-550 CANNISTER LOCATIONS, SEE PAGE 121.

BB0474

The National Traffic and Motor Vehicle Safety Act of 1966 (United States) and the Motor Vehicle Safety Act (Canada) and the standards and regulations issued under authority of these laws impose responsibilities on dealers, intermediate and final stage manufacturers, and vehicle alterers and modifiers, as well as on Ford Motor Company. This section identifies some of these responsibilities. **It is not intended to be comprehensive, nor to provide advice on legal questions applicable to individual situations.** Advice on matters involving particular factual situations should be obtained from your legal counsel or from the National Highway Traffic Safety Administration (United States) or the Ministry of Transport (Canada).

Included among these safety standards and regulations re those applicable to trucks, buses, multipurpose passenger vehicles, passenger cars, vehicles manufactured in tow or more stages, and to certain types of motor vehicle equipment offered for sale in the United States or Canada.

Completed vehicles as manufactured by Ford Motor Company and Ford Motor Company of Canada, Limited, are certified as conforming to all applicable Motor Vehicle Safety Standards issued under the National Traffic and Motor Vehicle Safety Act of 1966 (U.S.) or the Motor Vehicle Safety Act (Canada).

Where the vehicle is incomplete, a dealer or body builder who, after delivery and before retail sale, completes the vehicle is responsible for certification that the completed vehicle conforms to applicable U.S. or Canada Motor Vehicle Safety Standards. Dealers and body builders may be subject to substantial penalties if they sell or offer for sale vehicles which do not conform to all applicable U.S. or Canada Standards.

Certification-related information concerning Ford Motor Company completed vehicles and incomplete vehicles follows:

COMPLETED VEHICLES

All completed vehicles manufactured by Ford Motor Company and Ford Motor Company of Canada, Limited, for use on the public roads are provided with safety compliance certification labels affixed to the vehicles at the assembly plants. These labels contain information required by Part 567 of Title 49 of the Code of Federal Regulations for completed vehicles offered for sale in the United States and by Section 6 of the Canadian Motor Vehicle Safety Regulations for completed vehicles offered for sale in Canada. This information includes, among other things, the Gross Axle Weight Rating (GAWR) for each axle of the vehicle and the Gross Vehicle Weight Rating (GVWR) of the total vehicle. The labels also list the tire and rim data required by FMVSS or CMVSS No.120, Tire Selection And Rims For Motor Vehicles Other Than Passenger Cars.

Completed vehicles, manufactured by Ford, for sale in the United States, will have a label similar to the one shown on this page (the label is located on the driver's door latch pillar).

The Canadian Motor Vehicle Safety Act and Regulations require: (1) display of the National Safety mark (below); (2) the expression "Canada Motor Vehicle Safety Standards" or "CMVSS"; and (3) "Poids Nominal Brut du Vehicule" or "PNBV" on vehicles manufactured for sale in Canada. A label containing this information is shown on this page.

Completed vehicles manufactured by Ford for sale in Canada, will have a label similar to the one shown on this page containing the Canadian National Safety Mark or a separate National Safety Mark label.

Alteration of completed vehicles before the first purchase of the vehicle for purposes other than resale may affect compliance of the vehicle to certain safety standards. Parts 567 and 568 of Title 49 of the Code of Federal Regulations state requirements for vehicle alterers in the United States. In Canada, Regulation 9 of the Canadian Motor Vehicle Safety Regulations determines the obligations of vehicle alterers under the Canadian Motor Vehicle Safety Regulations.

NOTE: For completed vehicles offered for sale in the province of Quebec, Canada, the label will be printed in French.

The following section headed "Information For Persons Who Alter Completed Vehicles" explains the "accessory reserve capacity" information printed on the safety compliance certification label and its relationship to FMVSS and CMVSS No. 105 or 135 (Hydraulic Brakes), FMVSS and CMVSS NO. 204 (Steering Column Rearward Displacement), FMVSS and CMVSS 208 (Occupant Crash Protection), FMVSS and CMVSS NO. 212 (Windshield Mounting), FMVSS and CMVSS No. 219 (Windshield Zone Intrusion), FMVSS and CMVSS NO. 301 (Fuel System Integrity), FMVSS No. 303 (Fuel System Integrity of Compressed Natural Gas Vehicles), CMVSS 301.1 (LPG Fuel System Integrity), and CMVSS NO. 301.2 (CNG Fuel System Integrity) compliance testing for Ford completed vehicles.

VEHICLES 4536 kg (10,000 lb) GVWR AND LESS

Trucks, buses and MPVs having GVWRs of 4536 kg (10,000 lb) and less manufactured by Ford Motor Company in the current model year are certified as complying with the requirements of all applicable Federal U.S. and Canadian Motor Vehicle Safety Standards including FMVSS and CMVSS NO. 105 or 135, Hydraulic Brakes, FMVSS and CMVSS No. 204, Steering Column, Rearward Displacement (if the vehicles have unloaded vehicle weights of 2495 kg (5500 lb) or less), FMVSS No. 208, Occupant Crash Protection (injury criteria if vehicles GVWR is 3856 kg (8500 lb) or less having an unloaded vehicle weight of 2495 kg (5500 lb) or less), FMVSS and CMVSS No. 212, Windshield Mounting, FMVSS and CMVSS No. 219, Windshield Zone Intrusion, FMVSS and CMVSS NO. 301, Fuel System Integrity, and FMVSS 303 and CMVSS 301.1 (LPG Fuel System Integrity), and CMVSS NO. 301.2 (CNG Fuel System Integrity). Ford conducts compliance testing and makes compliance representations based on vehicle test weights that include the weights of all available regular production options plus the loads specified by FMVSS and CMVSS Nos. 105, 135, 204, 208, 212,219, 301, and 303 (301.1 and 301.2 Canada). With the exception of FMVSS and CMVSS No. 105 or 135, the test weight for a particular vehicle is usually less than the GVWR indicated on the vehicle safety compliance certification label.

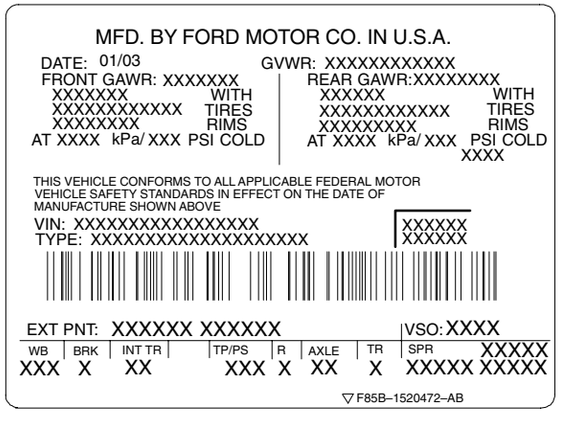

BB0428

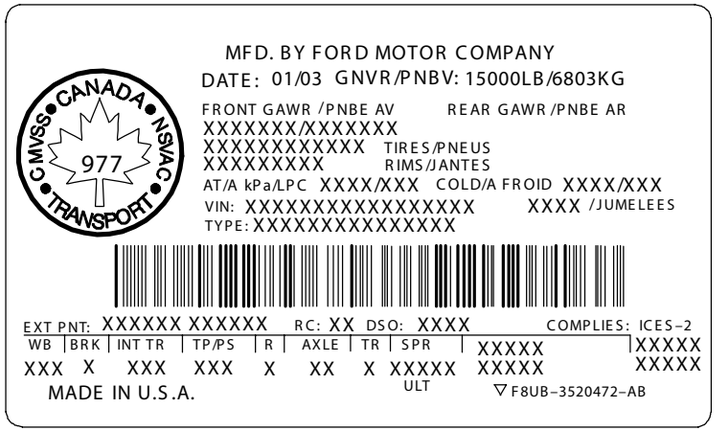

BB0524

IMPORTANT INFORMATION!
For Persons who Alter Completed Vehicles

The following applies to the alteration of vehicles completed by Ford Motor Company.

The degree of conformity to safety standards of incomplete vehicle chassis produced by Ford is represented by the *Incomplete Vehicle Manual* or IVM. An IVM is normally included in dunnage accompanying each Incomplete Vehicle.

Vehicle alterers should exercise caution when adding weight to the vehicle by installing accessories or modifying the vehicle because if the unloaded vehicle weight of the altered vehicle exceeds the unloaded vehicle weight for which Ford Motor Company has established compliance, then the vehicle alterer will be responsible to certify the altered vehicle pursuant to Title 49 of the Code of Federal Regulations Sections 567.7 and 568.8 in the United States or to Section 9 of the Canadian Motor Vehicle Safety Regulations in Canada.

Payload worksheets are provided in the *Ford Truck Source Book* at your Ford Dealer to help prospective purchasers of Ford truck products estimate the total weight of accessories, equipment, and modifications that may be added to the completed vehicle without exceeding the allowable weight ratings for the vehicle in question. Specific questions on this or related subjects may be directed to the Ford Truck Body Builder Advisory Service.

For each completed vehicle, Ford Motor Company determines the **TOTAL ACCESSORY RESERVE CAPACITY (ARC)**, which represents the amount of accessory or modification weight in pounds that can be added to a certified vehicle before its unloaded vehicle weight exceeds the unloaded vehicle weight for which Ford Motor Company has established compliance. Total Accessory Reserve Capacity designations assume the use of permanently attached components resulting in center of gravity locations generally similar to those of comparable completed vehicles. Any additions or alterations that significantly affect the center of gravity of the total unit could impose more severe conditions than those for which Ford Motor Company has established compliance to FMVSS and CMVSS requirements. Examples of such extremes would be the installation of relatively heavy devices at the front or rear of the vehicle, particularly if these devices also had very high centers of gravity.

Vehicles having a GVWR greater than 10,000 lb manufactured by Ford Motor Company include a total ARC weight that represents the maximum weight that can be permanently installed without compromising the durability and allow a reasonable minimum cargo for the customer.

TOTAL ACCESSORY RESERVE CAPACITY T.A.R.C. is provided on the Safety Compliance Certification Label (located on the driver's door latch pillar of Ford completed vehicles, as shown in the following example.

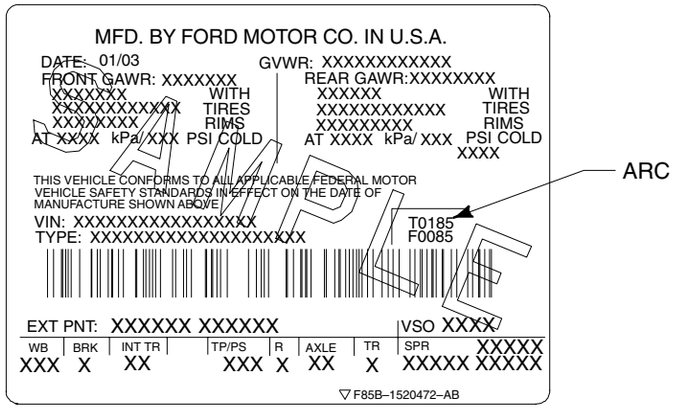

BB0428

The T.A.R.C. specifies the total weight of permanently attached accessories or equipment that can be added to the vehicle. T0185 in the illustrated example indicates that 185 lbs of accessories or equipment can be added to the vehicle.

Also specified is the Front Axle Accessory Reserve Capacity (F0085 in the illustrated example). Although not directly applicable to FMVSS/CMVSS Nos. 204, 208, 212, 219, 301, and 303 (301.2 Canada) conformity representations, this magnitude represents the allowable weight that may be added in various forms (permanently attached equipment and accessories and removable equipment and accessories or any combination thereof) without overloading the front axle. Except for vehicles with the Snowplow Prep Package, this value will usually be less than the Total Accessory Reserve Capacity. Thus in the example, a total of 185 lbs of permanently installed equipment may be added to the vehicle but its distribution must be such that the load on the front axle is not increased by more than 85 lbs. However, although the Front Axle Accessory Reserve Capacity value may be greater than the Total Accessory Reserve Capacity value in some cases, the latter must never be exceeded. For vehicles with the Snowplow Prep Package, the Front Axle Accessory Reserve Capacity may be greater than the Total Accessory Reserve Capacity. This additional front axle capacity can be utilized to accommodate the removable snow plow components, such as the blade assembly.

Should the Front Axle Accessory Reserve Capacity on a Snowplow Package optioned vehicle be less than that which is required to accommodate the snow plow assembly, it should be understood that allowances for carrying persons in at least two designated seating positions (those provided with seat belts) have already been made. Therefore, it may be possible to operate the vehicle with minimum cargo and only one or two persons on board.

To prevent overloading under these circumstances, it is recommended that the vehicle alterer weigh the front axle under the conditions in which the vehicle is to be operated to ensure that the Front Gross Axle Weight Rating is not exceeded. See the Loading Information section of the *Owner's Guide*.

If the weight and weight distribution (front to rear) of the accessories or equipment to be added are not known, it will be necessary to weigh the vehicle before and after accessories or equipment are added to verify that neither the Front Axle Accessory Reserve Capacity nor the Total Accessory Reserve Capacity has been exceeded. When weighing the vehicle, remember to have all fluids necessary for vehicle operation (including fuel) filled to maximum capacity and weigh vehicle by axle so that front axle weight and total vehicle weight can be determined. Subtract the front axle weight of the vehicle before modification from the front axle weight of the vehicle after accessories or equipment have been added; this value must be equal to or less than the Front Axle Accessory Reserve Capacity (for the above example — 85 lb). Subtract the total vehicle weight before modification from the total vehicle weight after accessories or equipment have been added; this value must be equal to or less than the Total Vehicle Accessory Reserve Capacity (for the above example — 185 lb). Use the actual Accessory Reserve Capacity information as it appears on the safety compliance certification label of your vehicle.

If you know the weight and weight distribution of the accessories or equipment (including all fluids, if applicable) to be added, compare these weights with the Accessory Reserve Capacity to ensure that the added accessories or equipment do not exceed the Accessory Reserve Capacity.

Compliance to FMVSS and CMVSS 105 or 135 depends upon, among other things, the location of the center of gravity of the completed vehicle. Therefore, any modification or alteration to a completed vehicle must take into account its effect upon FMVSS and CMVSS 105 or 135 conformance. A set of guidelines are contained at the end of the completed vehicle portion of this section. A section specifically addressing the modification of pickup trucks in ways that include replacing pickup boxes with other equipment is contained in the Appendix section of this book.

Completed vehicles as produced by Ford meet the Center High Mounted Stop Lamp (CHMSL) requirements of FMVSS 108, Lamps, Reflector Devices, and Associated Equipment, and the mirror requirements of FMVSS and CMVSS 111, Rearview Mirrors, Removing a pickup box and installing a second unit body could affect compliance of the vehicle to these requirements even though the CHMSL and mirror systems have not been altered. See the detailed discussion on page 211 to determine what must be done to maintain compliance with the CHMSL and mirror requirements of FMVSS 108 and F/CMVSS 111.

WARNING: The accessory reserve capacity weight limitation found on the safety compliance certification label refers to FMVSS and CMVSS Nos. 204, 208, 212, 219, 301, and 303 (301.2 Canada) compliance only. If the **added weight is 227 kg/500 lb or more and the vehicle's GVWR rating is 3856 kg/8500 lb or less, the modifier may be responsible for recertification** to the applicable EPA, CARB, or CMVSS emissions standards (refer to MSAPC [EPA] Advisory Circular No. 64).

GUIDELINES FOR REVISING GAWR CAPACITIES FOR FORD LIGHT TRUCK VEHICLES

NOTE: GVWR increases may not be made on Ford Light Truck vehicles.

These guidelines are provided in response to requests for information on revising the Gross Axle Weight Rating (GAWR) capacities of Ford Light Truck vehicles. Dealers or purchasers should first try to obtain a vehicle with the desired GAWR capacities before modifying a vehicle to revise its weight ratings. If circumstances require vehicles to be altered and GAWR rating to be revised, however, the following guidelines must be followed:

1. This information is provided for new, current model vehicles, to assist vehicle alterers who modify vehicles as described below in determining whether the modified vehicle complies with applicable regulatory requirements.
2. Revised GAWR capacities must be within the currently available capacities in Ford production for the particular model to maintain the vehicle's warranty. The **GVWR may be revised downward but must remain in the same GVWR range as coded in the fourth position of the vehicle identification number (VIN) in accordance with the requirements of 49 CFR Part 565 and CMVSS 115**. The VIN is displayed on the driver's side of the instrument panel and is visible from outside the vehicle. For GVWR codes utilized in the fourth position of the VIN, see the list in the chart on this page.

EXAMPLE:

A typical F-Series VIN is 1FTSF34FX3EA01784. The fourth position in the VIN is S. Therefore, the GVWR of the vehicles is in the range 9001 to 10,000 lb and the lowered GVWR of this vehicle must fall in this GVWR range as well.

3. The appropriate chassis component or components (axles, brakes, tires/tire pressure, wheels, springs) are to be modified or changed to provide the revised GAWR capacity desired. All new suspension components installed are to have the same engineering specifications as those used by Ford in production (Ford service parts meet those specifications) at the GAWR capacities desired and must be installed according to the procedures specified in the applicable model year *Ford Truck Service Manual* to maintain the vehicle's warranty. Refer to the *Ford Source Book* for component specifications information. The person who alters the vehicle should maintain records as to the modifications made to obtain the desired revised GAWR capacities in order to document the basis for certification to applicable Federal Motor Vehicle Safety Standards. Besides the suspension components noted above, the specifications for other vehicles that have been altered must also be carefully reviewed to establish that these systems are equivalent to those provided by Ford in a production vehicle at the GAWR capacities desired. These systems include brakes, steering, frame, powertrain (engine availability, driveline, transmission, rear axle ratio), and axle capacities (both front and rear) and are also specified in the *Ford Source Book*. For other information concerning the component changes necessary for the desired GAWR capacities, please contact the Ford Truck Body Builders Advisory Service.

GVWR CODES UTILIZED IN VIN POSITION FOUR

Brake System	GVWR	GVWR Range	Trucks w/o Air Bags	Lt. Trucks & MPV's w/ DRV & Pass Air Bags	Lt. Trucks & MPV's w/ DRV & Pass Air Bags & Side Air Bags, Curtains, or Canopies	RHD U.S. Postal Service Vehicle w/o air bags
Hydraulic	Class A:	Not greater than 3000 pounds		T		
Hydraulic	Class B:	3001 - 4000 lb		U	B	
Hydraulic	Class C:	4001 - 5000 lb		Y	C	
Hydraulic	Class D:	5001 - 6000 lb		Z	D	M
Hydraulic	Class E:	6001 - 7000 lb		R	E	G
Hydraulic	Class F:	7001 - 8000 lb		P	F	
Hydraulic	Class G:	8001 - 8500 lb		V		
Hydraulic	Class G:	8501 - 9000 lb	H	N		
Hydraulic	Class H:	9001 - 10,000 lb	J	S		
Hydraulic	Class 3:	10,001 - 14,000 lb	K	W		
Hydraulic	Class 4:	14,001 - 16,000 lb	L	X		
Hydraulic	Class 5:	16,001 - 19,500 lb	M	A		
Hydraulic	Class 6:	19,501 - 26,000 lb	N			
Hydraulic	Class 7:	26,001 - 33,000 lb	P			
Air	Class 3:	10,001 - 14,000 lb	T			
Air	Class 4:	14,001 - 16,000 lb	U			
Air	Class 5:	16,001 - 19,500 lb	V			
Air	Class 6:	19,501 - 26,000 lb	W			
Air	Class 7:	26,001 - 33,000 lb	X			

4. Certification Labels for Altered Vehicles

United States

A person or company who alters a previously certified vehicle before the first purchase by the final customer in such a manner that its stated weight ratings are revised, is required by Federal Regulation (49 CFR Part 567.7) to affix an altered vehicle certification label in addition to the Ford completed vehicle certification label.

The label must be affixed to the vehicle in the manner and form described in 49 CFR Part 567.4:

- The label shall, unless riveted, be permanently affixed in such a manner that it cannot be removed without destroying or defacing it.
- The label shall be affixed to either the hinge pillar, door-latch post, or the door edge that meets the door-latch post next to the driver's seating position, or if none of these locations is practicable, to the left side of the instrument panel (other permissible locations are also specified in 49 CFR Part 567.4).
- The lettering on the label shall be of a color that contrasts with the background of the label.
- The label shall contain the required statements in the English language and lettered in block capitals and numerals not less than three thirty-seconds of an inch high.
- The lettering shall be permanent. If typed or written, a protective clear cover may be necessary to prevent information from being wiped off.
- Label must not cover or obscure the chassis manufacturers label.

Canada

"Alterers" of motor vehicles are required to affix a permanent label on vehicles that they manufacture bearing a statement of compliance as provided by Section 9 of the Canadian Motor Vehicle Safety Regulations. The vehicle alterer should affix a corporate label containing information shown on this page.

1. Insert the name of the company that altered the vehicle.
2. Insert the month and year during which the alteration of the vehicle was completed.
3. Insert a drawing of the National Safety Mark which includes their unique manufacturer number.
4. Insert revised GVWR or PNBV capacities in kilograms of the vehicle as altered, where they differ from those shown on the original compliance label.
5. Insert the GAWR/PNBEs of the vehicle as altered, where they differ from those shown on the original compliance label. Also, include the tire size, rim size and tire inflation pressure.
6. Insert the vehicle type stated on the safety standard certification label provided by Ford Motor Company.

The type of vehicle, in both official languages, or the word "TYPE" along with one of the following abbreviations, namely,

(i) "AT/PA" to refer to an auto transporter,
(ii) "ATV/VTT" to refer to an all-terrain vehicle,
(iii) "B/A" to refer to a bus,
(iv) "BT/RA" to refer to a bus trailer,
(v) "CD/CCC" to refer to a C-dolly,
(vi) "CMC/MCC" to refer to a competition motorcycle,
(ix) "LDD/CRC" to refer to a load divider dolly,
(x) "MH/AC" to refer to a motor home,
(xi) "MC" to refer to a motorcycle,
(xii) "MPV/VTUM" to refer to a multipurpose passenger vehicle,
(xiv) "RUM/MUR" to refer to a restricted-use motorcycle,
(xv) "SB/AS" to refer to a school bus,
(xvi) "TRA/REM" to refer to a trailer,
(xvii) "TCD/CDC" to refer to a trailer converter dolly,
(xviii) "TRU/CAM" to refer to a truck, and
(xix) "TT/CT" to refer to a truck tractor.

The label must meet the following requirements as described in Section 9:

- Shall be permanently attached.
- Shall be affixed adjacent to the original compliance label required by Section 6.
- The lettering of the label shall be clear, indelible, indented, or embossed, or of a color that contrasts with the background color of the label, and in block capitals and numerals not less than 2 mm high.
- The label shall be permanently affixed to the same surface as that to which the National Safety Mark is affixed.

THIS VEHICLE WAS ALTERED BY ____(1)____
IN ____(2)____ AND AS ALTERED, IT CONFORMS TO ALL APPLICABLE FEDERAL MOTOR VEHICLE SAFETY STANDARDS IN EFFECT IN ____(3)____
TYPE ____(4)____
GVWR: ____(5)____ LB
FRONT GAWR: ____(5)____ LB WITH ____(6)____
TIRES, ____(6)____ RIMS AT ____(6)____ PSI COLD ____(6)____
REAR GAWR: ____(5)____ LB WITH ____(6)____
TIRES, ____(6)____ RIMS AT ____(6)____ PSI COLD ____(6)____

(1) Insert individual or corporate name of vehicle alterer.
(2) Insert month and year in which alterations were completed.
(3) Insert appropriate month and year — no earlier than the manufacturing date of the original vehicle and no later than the date alterations were completed.
(4) Insert "Type" of altered vehicle, i.e., Truck, Bus, MPV, etc.
(5) Insert revised GAWR capacities in lb.
(6) Insert appropriate tire, rim and cold inflation pressure information corresponding to the revised GAWR capacities (insert the word "DUAL" after the rear wheel cold inflation pressure information on dual rear wheel vehicles).

Typical Certification Label for altered vehicle for sale in the United States

THIS VEHICLE WAS ALTERED BY/CE VÉHICLE A ÉTÉ MODIFIÉ PAR
____(1)____

DATE: ____(2)____ (3)

GVWR: ____(4)____ KG
FRONT GAWR: ____(5)____ KG WITH ____(5)____
TIRES, ____(5)____ RIMS AT ____(5)____ kPa COLD
REAR GAWR: ____(5)____ KG WITH ____(5)____
TIRES, ____(5)____ RIMS AT ____(5)____ kPa COLD
TYPE: ____(6)____

Typical Corporate Label information for altered vehicles for sale in Canada (Reference Section 9 of the Canadian Motor Vehicle Safety Regulations)

FMVSS AND CMVSS 105 and 135 HYDRAULIC BRAKE COMPLIANCE GUIDELINES FOR ALTERED RANGER VEHICLES AND E-SERIES VEHICLES (EXCEPT WHEN COMPLETED AS A SCHOOL BUS)

105 and 135 INFORMATION

Vehicle weight and dimensional information required for center of gravity calculations are available in the *Ford Source Book*. See your local Ford Dealer and refer to appropriate model year and specific vehicle for required information.

Abbreviated definitions and a vehicle diagram to assist with the equations for the FMVSS 105 and 135 segment are shown on page 57 for E-Series and Ranger and page 62 for Super Duty F-Series.

FOR ALL RANGER AND E-SERIES VEHICLES

The vehicle, as altered will conform to FMVSS and CMVSS No. 105 or 135, Hydraulic Brake System. if:

- No alterations, modifications or replacements are made to the service or parking brake system, anti-lock brake system, vacuum system, wheels or tires, brake system, indicator lamp and wiring, brake system reservoir labeling, suspension ride height or spring rate, hydro-boost system, power steering pump and lines if used with hydro-boost, and engine belt drive system.
- Any removal of a Ford body or chassis component is accompanied by the addition of equal weight.
- The vertical distance from the ground to the completed vehicle center of gravity should not exceed 36 inches for vehicles < 8000 lb GVWR and 48 inches for vehicles ≥ 8000 lb GVWR. (Restrictions for other standards may also apply).
- For Ranger Pickup Box Removal, the SUB weights found in Table A page 215 are met, as is the maximum Unloaded Vehicle Weight.
- The applicable GAWR's, GVWR, and accessory reserve capacity (ARC) weights (see preceding pages) are not exceeded.
- The applicable center of gravity limitations are met using one of the following calculation methods on this page.

FOR VEHICLES UNDER 3629 KG [8000 LB] GVWR

- The E-Series vehicle equipped with Recreational Trim have an Unloaded Vehicle Weight that does not exceed the values in Table 1 page 59.
- The rear weight component (W_{rul}), as measured between the rear tires and the ground, does not exceed 58% of the completed vehicle weight at Unloaded Vehicle Weight plus 400 lb located in the driver and front passenger area (W_{ul}).

  Maximum W_{rul} = .58 x W_{ul} (see definitions on the next page).
- The horizontal center of gravity of the †SUB is rearward of ††L_{min} for the appropriate vehicle description in Table A on this page.

  L_{min} does not apply to a SUB of 120 lb or less when installed rearward of the front seats and forward of the centerline of the rear axle. (Do not restrict seat travel. See IVM for SgRP location and torso angle).

The horizontal center of gravity for the SUB is:

- At or forward of the rear axle centerline. The vertical center of gravity for the completed vehicle at Unloaded Vehicle Weight + 400 lb passenger load CG_v (Equation A) must not exceed 36.0 inches, when measured from the ground.
- Behind the rear axle centerline. The vertical center of gravity of the completed vehicle at Unloaded Vehicle Weight + 400 lb passenger load must fall within the appropriate range determined from Table 6, page 60. The value of CG_h (Equation B), which approximates the horizontal center of gravity of the completed vehicle, is used in Table 6 page 60 to determine the vertical center of gravity limits for the completed vehicle. The value CG_v (Equation A), which approximates the vertical center of gravity of the completed vehicle, must fall within the appropriate range determined from Table 6 page 60.

EQUATION A

$$CG_v = \frac{CG_{vb}W_b + CG_{vc}W_c + 10,000}{W_t}$$

EQUATION B

$$CG_h = \frac{\left(W_{rb} + W_{rc} + \left(\frac{400 \times CG_{hp}}{WB}\right)\right)}{W_t} \times WB$$

FOR VEHICLES 3629 KG [8000 LB] THROUGH 8618 KG [19,000 LB] GVWR

The horizontal center of gravity for the SUB is:

- E-Series Van, Cutaway, and Stripped Chassis vehicles with a GVWR of 4536 kg [10,000 lb] or less do not exceed the maximum Unloaded Vehicle Weight value in Table 1 on page 59.
- E-Series Cutaways/Chassis Cab and Stripped Chassis vehicles conform to the minimum SUB weights found in Table 4 on page 60.
- At or forward of the rear axle centerline. The vertical center of gravity for the completed vehicle at GVWR (CG_v — Equation C) must not exceed 48 inches, when measured from the ground.
- E-250/350/450 Stripped Chassis, E350/450/550 Super Duty Cutaway/Chassis Cab must have a horizontal CG for the second unit body at or forward of the centerline of the rear axle.
- Behind the rear axle centerline. The vertical center of gravity for the completed vehicle at GVWR must fall within the appropriate range determined from Table 6 page 60. The value of CG_h (Equation D), which approximates the horizontal center of gravity of the completed vehicle, is used in Table 6 page 60 to determine the vertical center of gravity limits for the completed vehicle.

EQUATION C

$$CG_v = \frac{CG_{vb}W_b + CG_{vc}(W_c + W_l) + 25P}{GVWR}$$

EQUATION D

$$CG_h = \frac{\left(W_{rb} + W_{rc} + \left(\frac{P \times CG_{hp}}{WB}\right) + W_{rl}\right)}{GVWR} \times WB$$

TABLE A
HORIZONTAL CENTER OF GRAVITY FORWARD LIMIT

Vehicle	Wheelbase Millimeter [inch]	L_{min} Millimeter [inch]
E-150	3505 [138]	1473 [58]
E-250	3505 [138]	1524 [60]

TABLE B
E-SERIES PASSENGER LOAD

GVWR [lb]	P [lb]
8000 – 10,000	400
10,001 – 19,000	500

†SUB = Second Unit Body (See definition next page.)

††L_{min} = The minimum horizontal center of gravity of the SUB measured in inches rearward from the centerline of the front axle.

Page 57 SAFETY/EMISSION

FMVSS AND CMVSS 105 and 135 HYDRAULIC BRAKE COMPLIANCE GUIDELINES FOR ALTERED FORD LIGHT TRUCKS. FOR INCOMPLETE VEHICLES - REFER TO THE *IVM*.

L* = Horizontal distance in inches between the SUB center of gravity and the of the front axle.

P = Passenger load [See Table B page 56.]

CG_v = Vertical distance from the ground to the center of gravity [inches] of the completed vehicle.

CG_h = Horizontal distance from of the front wheels to completed vehicle center of gravity [inches].

CG_{vb} = Vertical distance from the ground to the center of gravity of the SUB and/or permanently attached equipment [inches].

CG_{vc} = Vertical distance from the ground to the center of gravity of the chassis [inches] (including cab if original equipment). (Taken from Table 5, page 60.)

CG_{hp} = Horizontal distance from the ground to the center of gravity of the of the front wheels to the P [inches] (passenger load). (Taken from Table 3, page 59.)

W_b = Weight of the SUB and/or permanently attached added equipment [pounds].

W_{rb} = Weight on the rear wheels of the SUB and/or permanently attached added equipment [pounds].

W_{rc} = Weight at the rear wheels of the vehicle (chassis and cab) (fuel tanks full) [pounds], including option weight.

W_c = Weight of the vehicle (chassis and cab) (fuel tanks full) [pounds], including option weight.

WB = Vehicle wheelbase [inches].

W_t = Total unladen weight = $(W_b + W_c + P)$

GVWR = Gross Vehicle Weight Rating of the vehicle [pounds].

W_l** = Remaining cargo capacity [pounds].
Where: $W_l = GVWR - (W_b + W_c + P)$

W_{rl}** = Weight of the remaining cargo capacity on the rear wheels [pounds].

$$W_{rl} = \frac{(CG_{hl})\,W_l}{WB}$$

CG_{hl}** = Horizontal distance from the of the front wheels to the cargo center of gravity [inches], (taken from Table 3, Page 59). For many common vehicles, if the CG_{hl} is not given in the table, then it may be estimated as the distance from the of the front wheel to the horizontal midpoint of the argo area.

SUB = A Second Unit Body consists of the body structure and/or all the cargo carrying, work performing and/or load bearing components and/pr equipment installed by a subsequent stage manufacturer on an incomplete vehicle, such that the incomplete vehicle becomes a completed vehicle.

* Required for < 8000 lb GVWR calculations only.
** Required for ≥ 8000 lb GVWR calculations only.

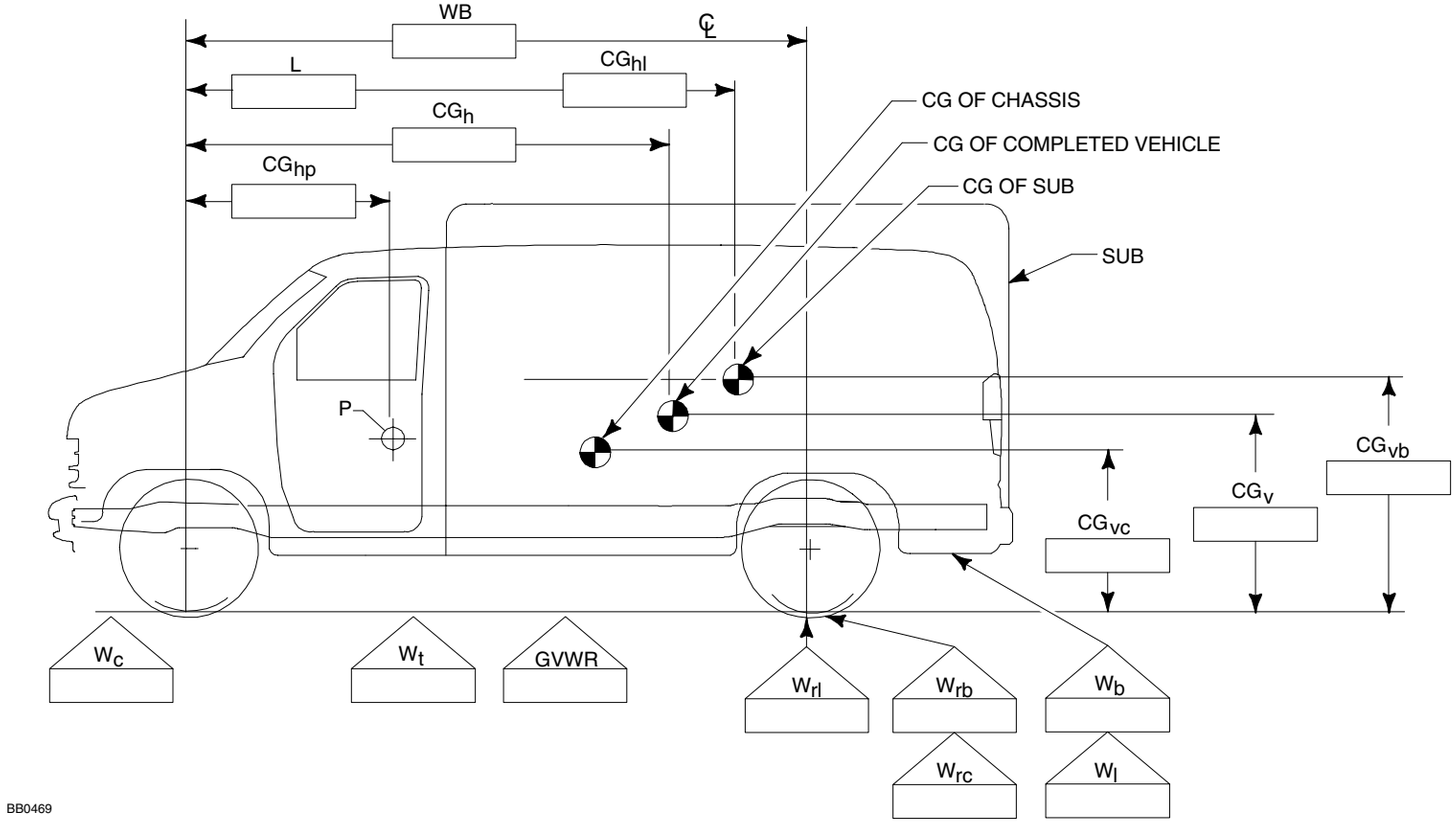

FMVSS AND CMVSS 105 and 135 HYDRAULIC BRAKE COMPLIANCE GUIDELINES FOR ALTERED FORD LIGHT TRUCKS. FOR INCOMPLETE VEHICLES - REFER TO THE *IVM*.

SECOND UNIT BODY CENTER OF GRAVITY CALCULATION SUGGESTIONS

In the case where the rear weight of the SUB and/or added equipment must be reduced and the CG_v is found to be below the allowed minimum CG_v it may be possible to bring the vehicles into compliance by moving the CG_h forward. Forward movement of the CG_h can be accomplished by:

- Redistributing the weight of the SUB and/or added equipment.
- Adding **permanently** attached ballast forward of the CG_h. In order to reduce the rear weight, the ballast must be forward of the front axle. (Caution must be taken not to exceed the GVWR or front GAWR of the vehicle.)

The following general equations can be used to find the center of gravity of the SUB and added equipment when there are several elements making up the CG.

NOTE: Removal of the components or body parts would be represented by a negative weight being used in these calculations.

$$CG_{vb} = \frac{CG_{vb1}(W_{b1}) + CG_{vb2}(W_{b2}) + ... + CG_{vbn}(W_{bn})}{W_{b1} + W_{b2} + ...W_{bn}}$$

and the horizontal CG location of the combined SUB and added equipment is:

$$CG_{hb} = \frac{(W_{rb1} + W_{rb2} + ... + W_{rbn})WB}{W_{b1} + W_2 + ... + W_{bn}}$$

The front/rear weight break down can be found with the use of the following equation:

$$W_{rb} = \frac{CG_{hb}(W_{b1} + W_{b2} + ... + W_{bn})}{WB}$$

Conversely, the front weight component of the SUB and added equipment is:

$$W_{fb} = (W_{b1} + W_{b2} + ... + W_{bn}) - W_{rb}$$

SAMPLE CALCULATIONS

Vehicles <8000 lb GVWR
Sample (1)
Ranger (4x2) pickup box removal vehicle 118 inch WB 4800 lb GVWR

Known:
W_b = 250 lb W_{rb} = 260 lb (behind rear axle)
W_c = 2912 lb; W_{rc} = 1080 lb
CG_{vb} = 28 CG_{vc} = 25.5 CG_{hp} = 53.9
This vehicle falls in the under 8000 lb GVWR category and the SUB CG is behind the rear axle.

From equation A & B.

$$CG_v = \frac{(28)(250) + (25.5)(2912) + 10000}{3562} = 25.6 \text{ inches}$$

$$CG_h = \frac{260 + 1080 + \frac{400 \times 53.9}{113.9}}{3562} \times 113.9 = 48.9 \text{ inches}$$

From Table 1, page 59:
Upper Limit CG_v = 1.39 x 48.4 – 36.8 = 31.2 inches
Lower Limit CG_v = 1.39 x 48.4 – 51.7 = 16.3 inches
The 25.6 inches calculated is within the range given so this vehicle is acceptable from a compliance to FMVSS and CMVSS 135 standpoint.

Sample (2)
E-Series under 8000 lb GVWR 138 inch WB

Altering a completed E-150 vehicle with the addition of a permanently attached tool box and partition can be handled as follows:

The vertical distance above the floor is

$$V = \frac{Wt1\,(CG_{1V}) + Wt2\,(CG_{2V})}{Wt1 + Wt2}$$

$$V = \frac{125(24) + 100(25)}{125 + 100}$$

$$= 24.4 \text{ inches}$$

The longitudinal distance aft of the front axle is

$$L = \frac{Wt1\,(CG_{1h}) + Wt2\,(CG_{2h})}{Wt1 + Wt2}$$

$$= \frac{125(133) + 100(63)}{125 + 100}$$

$$= 101.9 \text{ inches}$$

Using the value for Min L from Table A on page 56:
Min L = .23 (138) + 21.4 +.72 (24.4)
Min L = 70.7 inches
Since 101.9 is greater than 58, this meets the L_{MIN} criteria.
If the vehicle curb weight + 400 lb for passengers (before alteration) is: front = 2825 lb; rear = 1888 lb; and, total = 4713 lb, adding the alteration weight of 225 lb which is distributed as follows:

$$\text{Rear Axle Reaction} = \frac{225 + 101.9}{138} = 166lb$$

Rear Axle Reaction = 166 lb
Conversely the Front Axle Reaction = 225 lb - 166 lb = 59 lb
W_{rul} = 1888 lb + 166 lb = 2054 lb
W_{ul} = 4713 lb + 225 lb = 4938 lb
Max W_{rul} = (.58) (4938) = 2864 lb using equation from page 56
So a W_{rul} of 2054 lb is less than the max.
W_{rul}, therefore, meets the criteria specified for compliance with FMVSS and CMVSS 105.

If the add-on weight of the SUB is forward of the centerline of the rear axle while conforming to GAWR, GVWR, ARC, and for pickup box removal vehicles min/max SUB weight restrictions (Table A page 215) are conformed to, then there are no FMVSS and CMVSS 135 issues.

E-150 ALTERED COMPLETED VEHICLE ADD TOOL CABINET AND A PARTITION

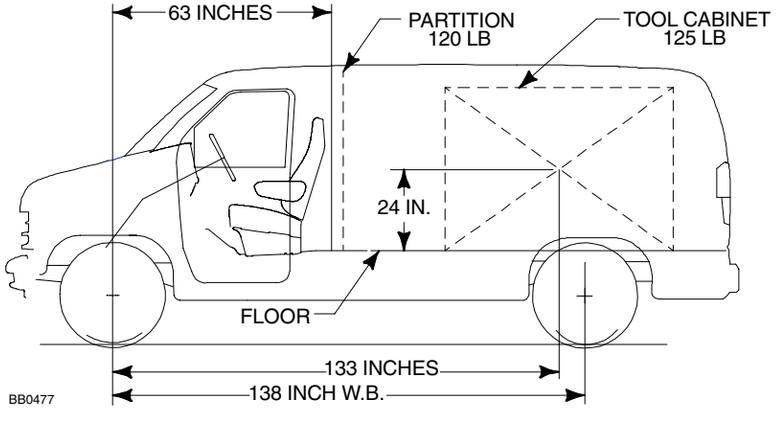

TABLE 1
Unloaded Vehicle Weight (UVW)
This information Does Not Apply to Vehicles Over 4536 kg [10,000 lb]

Models	Wheelbase Millimeter [inch]	MAXIMUM UNLOADED VEHICLE WEIGHTS Kilogram [pound] by Engine Size Liter [cubic inch]				
Incomplete E-Series Vehicles		**4.2L [256](3)**	**4.6L [281]**	**5.4L [330]**	**6.8L [413]**	**7.3LD [444]**
E-150 Regular Recreational Van	3505 [138]	2699 [5950](2)	2699 [5950](2)	2699 [5950](2)	NA	NA
E-250 Regular Recreational Van	3505 [138]	NA	NA	3130 [6900]	NA	NA
E-250 Comm. Stripped Chassis SRW	3150 [124]	2676 [5900]	NA	NA	NA	NA
E-350 Regular Van	3505 [138]	NA	NA	3583 [7900]	3583 [7900]	3583 [7900]
E-350 Extended Van or Extended Wagon	3505 [138]	NA	NA	3583 [7900]	3583 [7900]	3583 [7900]
E-350 Cutaway SRW (1)	3505 [138]	NA	NA	3856 [8500]	3856 [8500]	3856 [8500]
E-350 Cutaway DRW (1)	3505 [138]	NA	NA	3856 [8500]	3856 [8500]	3856 [8500]
E-350 Stripped Chassis SRW	3505 [138]	NA	NA	3946 [8700]	NA	NA
E-350 Stripped Chassis DRW	3505 [138]	NA	NA	3946 [8700]	NA	NA
E-350 Stripped Chassis SRW	4013 [158]	NA	NA	3946 [8700]	NA	NA
E-350 Stripped Chassis DRW	4013 [158]	NA	NA	3946 [8700]	NA	NA
E-350 Stripped Chassis DRW	4470 [176]	NA	NA	3946 [8700]	NA	NA

(1) E-350 vehicles completed as a School Bus must be equipped with the School Bus Prep Package and the Unloaded Vehicle Weight must exceed:
– 2540 kg [5600 lb] with single rear wheels (SRW).
– 2858 kg [6300 lb] with dual rear wheels (DRW).

(2) 2767 kg [6100] when completed with 6 or less designated seating positions

(3) Maximum unloaded vehicle weight values shown in this table are limits for purposes of FMVSS conformity only. The frontal area of the completed vehicle may limit the Maximum Unloaded Vehicle Weight based on emission certification with the 4.2L engine. See the chart on page 62 for additional information.

TABLE 2
CG_{hl} = Horizontal distance from front axle cargo CG:

Model		WB [in]	CG_{hl} [in] †
Super Duty F-Series:			
Regular Cab		137.0	132
Regular Cab		140.8	134
Regular Cab		164.8	146
Regular Cab		188.8	158
Regular Cab		200.8	164
SuperCab		158.0	153
SuperCab		161.8	155
Crew Cab		172.4	165
Crew Cab		176.2	167
Crew Cab		200.2	182
E-Series:			
Regular Van		138	116
†Extended Van or Extended Wagon		138	126
†Cutaway	(SRW)	138	121
	(DRW)	138	127
†Commercial Cab/Box Partition	(DRW)	158	134
†RV	(DRW)	158	138
†Commercial No Partition	(DRW)	158	143
†RV	(DRW)	176	153
†Commercial	(DRW)	176	160
†E-550	(DRW)	159.5	145
		177.5	154
		191.5	167
		209.5	182
		233.5	203

† If CG_{hl} is not given in the table or if the location of your cargo is not in the normal cargo area, then your CG_{hl} may be estimated as the distance from the ℄ of the front wheel to the horizontal midpoint of the cargo area.

TABLE 3
CG_{hp} = Horizontal distance from front wheel ℄ to Passenger Load. [Dimensions are in inches.]

All Rangers	53.9
All Super Duty F-Series	61.2
All E-Series † (except E-550)	48.5
E-550	50.0

† Except E-Series Stripped Chassis where the distance from the ℄ of the front axle to the H-point of the driver must be measured.

TABLE 4 MINIMUM SUB WEIGHT	
Models	**Kilogram [pound]**
E-350 Cutaway/Chassis Cab 3505 mm [138 in] WB	689 [1520]
E-350 Cutaway/Chassis Cab 4013 mm [158 in] WB	826 [1820]
E-350 Cutaway/Chassis Cab 4470 mm [176 in] WB	962 [2120]
E-450 Cutaway/Chassis Cab 4013 mm [158 in] WB	826 [1820]
E-450 Cutaway/Chassis Cab 4470 mm [176 in] WB	962 [2120]
E-550 Cutaway/Chassis Cab 4051 mm [159.5 in] WB	1234 [2720]
E-550 Cutaway/Chassis Cab 4058 mm [177.5 in] WB	1370 [3020]
E-550 Cutaway/Chassis Cab 4864 mm [191.5 in] WB	1506 [3320]
E-550 Cutaway/Chassis Cab 5321 mm [209.5 in] WB	1642 [3620]
E-550 Cutaway/Chassis Cab 5931 mm [233.5 in] WB	1778 [3920]
E-250 Stripped Chassis	771 [1700]
E-350 Stripped Chassis All WB	862 [1900]
E-450 Stripped Chassis All WB	998 [2200]

TABLE 5 CG_{vc} = Vertical distance ground to chassis CG [Dimensions are in inches.]	
Ranger (4x2)	= 24.0
Ranger (4x4)	= 27.0
F-150 (4x2)	= 26.0
F-150 (4x4)	= 28.5
F-250/350 (4x2) SRW > 8500 lb GVWR	= 30.0
F-250/350 (4x4) SRW > 8500 lb GVWR	= 31.0
F-350 (4x2) DRW	= 30.0
F-350 (4x4) DRW	= 31.0
F-450/550 (4x2 & 4x4) DRW	= 35.0
E-150 & E-250 Van < 8500 lb GVWR	= 28.5
E-250/350 SRW Van or Wagon > 8000 lb GVWR	= 32.0
E-350 Cutaway/Chassis Cab	= 28.0
E-450 Cutaway/Chassis Cab	= 26.5
E-550 Cutaway/Chassis Cab	= 29.5
E-250 SRW Stripped Chassis	= 25.0
E-350/450 Stripped Chassis	= 26.5

TABLE 6

CG_v = Vertical distance from the ground to the completed vehicle center of gravity [inch].

GVWR < 8000 lb use equation A & B, page 56

Model	WB	Equation for CG_v Range		
		Upper Limit		Lower Limit
Ranger 4x2 GVWR ≤ 4580 lb	112	CG_v =	1.39 x CG_h – 34.8	1.39 x CG_h – 49.0
	118	CG_v =	1.39 x CG_h – 36.8	1.39 x CG_h – 51.7
	126	CG_v =	1.39 x CG_h – 40.3	1.39 x CG_h – 56.7
Ranger 4x2 GVWR ≥ 4580 lb	112	CG_v =	1.39 x CG_h – 36.0	1.39 x CG_h – 42.0
	118	CG_v =	1.39 x CG_h – 38.5	1.39 x CG_h – 44.6
	126	CG_v =	1.39 x CG_h – 45.5	1.39 x CG_h – 48.6
Ranger 4x4 GVWR ≥ 4580 lb	112	CG_v =	1.39 x CG_h – 32.8	1.39 x CG_h – 38.4
	118	CG_v =	1.39 x CG_h – 34.7	1.39 x CG_h – 40.5
	126	CG_v =	1.39 x CG_h – 38.0	1.39 x CG_h – 44.4

GVWR < 8000 lb use equation A & B, page 56

Place the CG_h of the vehicle (from equation B) into the appropriate equations below to determine the allowable range of the CG_v. If the actual CG_v (from equation A) is within the range calculated, the center of gravity location is acceptable.

Model	WB	Equation for CG_v Range		
		Upper Limit		Lower Limit
E-150	138	CG_v =	1.39 x CG_h – 46.9	1.39 x CG_h – 58.7
E-250 7900 lb GVWR	138	CG_v =	1.39 x CG_h – 47.1	1.39 x CG_h – 59.0

GVWR ≥ 8000 lb use equation C & D, page 56

Place the CG_h of the vehicle (from equation D) into the appropriate equations below to determine the allowable range of the CG_v. If the actual CG_v (from equation C) is within the range calculated, the center of gravity location is acceptable.

Model	WB	Equation for CG_v Range		
		Upper Limit		Lower Limit
E-250 8600 lb GVWR	138	CG_v =	1.27 x CG_h – 59.0	1.27 x CG_h – 77.5
E-350 (SRW) ≤ 9600 lb GVWR	138 158	CG_v = CG_v =	1.27 x CG_h – 60.0 1.27 x CG_h – 69.5	1.27 x CG_h – 80.0 1.27 x CG_h – 90.7

FMVSS and CMVSS 105 HYDRAULIC BRAKE COMPLIANCE GUIDELINES FOR F-SERIES ALTERED VEHICLES WITH A GVWR BETWEEN 3629 kg [8000 lb] AND 8618 kg [19,000 lb] INCLUDING PICKUP BOX REMOVAL.

105 INFORMATION

Vehicle weights and dimensional information required for center of gravity calculations are available in the *Source Book*. See your local Ford Dealer and refer to appropriate model year and specific vehicle for the required information.

The abbreviated definitions and a vehicle diagram which are required for the equations in the FMVSS 105 segment of this document are shown on the next page.

The vehicle, as altered, will conform to FMVSS and CMVSS No. 105, Hydraulic and Electric Brake Systems, provided that:

- No alterations, modifications, or replacements are made to the following:
  - Service or parking brake system
  - Antilock brake system
  - Vacuum system
  - Wheels and tires
  - Brake system indicator lamp and wiring
  - Brake system reservoir labeling
  - Suspension ride height or spring rate
  - Hydro-boost system
  - Power steering pump and lines if used with Hydro-boost
  - Engine belt drive system
- Any removal of a Ford body or chassis component is accompanied by the addition of equal weight.
- Chassis Cab vehicle with a GVWR of 4536 kg [10,000 lb] or less do not exceed the Maximum Unloaded Vehicle Weight value in Table 7, page 63.
- The applicable GAWRs and GVWR weights are not exceeded.
  1. The completed vehicle must have a vertical center of gravity (equation E) of 48.00 inches or less when measured from the ground.
  2. The front axle curb weight of the completed vehicle (incomplete vehicle weight + min SUB weight, Table 8, page 63 may be reduced by no more than 10% for SRW or 25% for DRW vehicles, using the front axle ground reaction as manufactured by Ford.
  3. The rear axle curb weight of the completed vehicle (incomplete vehicle + min SUB weight, Table 8, page 63) must be the same or greater than the rear axle ground reaction as manufactured by Ford.
  4. REFERENCE: Equation F can be used to determine the completed vehicle's horizontal center of gravity (CG_h). Abbreviated definitions and a vehicle diagram are provided to assist with the equation on page 62.

SUPER DUTY F-SERIES PASSENGER LOAD TABLE		
CG_{hp}	**GVWR [lb]**	**P [lb]**
61.2 [in]	8500-10,000	400
	10,000-19,000	500

SUPER DUTY F-SERIES PASSENGER CG_{vp}		
All Seats		
	4x2	**4x4**
CG_{vp}	39.9 [in]	43.4 [in]

EQUATION E

$$CG_v = \frac{CG_{vb}\ W_b + CG_{vc}(W_c + W_l) + (CG_{vp})\ X\ P}{GVWR}$$

EQUATION F

$$CG_h = \frac{\left(W_{rb} + W_{rc} + \left(\frac{P \times CG_{hp}}{WB}\right) + W_{rl}\right)}{GVWR}\ X\ WB$$

Example:

F-250 (4x4) Pickup Box Removal with 137 inch WB and 8800 lb GVWR

Known:

F-250 (4x4) 137 inch WB, 8800 lb GVWR, 5.4L pickup box removal vehicle.

W_b = 675 lb; w_{rb} = 600 lb; w_{rc} = 1531 lb; W_c = 4684 lb; CG_{vb} = 35 inches;

CG_{vc} = 31.0 inches; W_l = GVWR - W_b + W_c +400) = 3041 lb

$$W_{rl} = \frac{(132)(3041)}{137} = 2930lb$$

From Equations E & F:

$$CG_v = \frac{35(675) + 31(4684 + 3041) + 43.4 \times (400)}{8800} = 31.9in$$

$$CG_h = \frac{(600 + 1531 + \frac{400(61.2)}{137} + 2930) \times 137}{8800} = 81.6in$$

Since CG_v is less than 48" and CG_h is less than 137", this vehicle is acceptable with the 675 lb SUB.

If CG_v exceeds 48", do one or more of the following, as required to get $CG_v \leq 48"$	**If CG_h exceeds wheelbase, do one or more of the following, as required to get $CG_h \leq WB$**
1. Move heavy objects to lower areas to lower the CG.	1. Move heavy objects forward to shift the CG forward.
2. Remove heavy objects with CG's greater than 48" above the ground.	2. Remove heavy objects which are aft of the rear axle.
3. Add weight as low as possible (lower than 48") to bring down CG.	3. Add weight as far forward as possible (forward of the rear axle) to shift the CG forward.

FMVSS AND CMVSS 105 HYDRAULIC BRAKE F-SERIES ALTERED VEHICLES INCLUDING PICKUP BOX REMOVAL.

P = Passenger load (see table on page 61).

CG_v = Vertical distance from the ground to the center of gravity [inches] of the completed vehicle.

CG_h = Horizontal distance from ℄ of the front wheels to the center of gravity [inches] of the completed vehicle.

CG_{vb} = Vertical distance from the ground to the center of gravity of the SUB and/or permanently attached added equipment [inches].

CG_{vc} = Vertical distance from the ground to the center of gravity of the chassis [inches] (including cab if original equipment). (Taken from Table 5 page 60).

CG_{hp} = Horizontal distance from the ℄ of the front wheels to the P (passenger load). (Taken from Passenger Load Table on page 61).

CG_{vp} = Vertical distance from the ground to the center of gravity of the front and rear seat P (passenger weight). (Taken from Passenger Load Table on page 61).

W_b = Weight of the SUB and/or permanently attached added equipment [pounds].

W_{rb} = Weight at the rear wheels of the SUB and/or permanently attached added equipment [pounds].

W_{rc} = Weight at the rear wheels of the vehicle (chassis and cab) (fuel tanks full) [pounds], including option weight.

W_c = Weight of the vehicle (chassis and cab) (fuel tanks full) [pounds], including option weight.

WB = Vehicle wheelbase [inches].

W_t = Total unladen weight = $(W_b + W_c + P)$

GVWR = Gross Vehicle Weight Rating of the vehicle [pounds].

W_l = Remaining cargo capacity [pounds]. Where: $W_l = GVWR - (W_b + W_c + P)$

W_{rl} = Weight of the remaining cargo capacity on the rear wheels [pounds].

CG_{hl} = Horizontal distance from the ℄ of the front wheels to the cargo center of gravity [inches]. (Taken from Table 2 page 59) for many common vehicles. If the CG_{hl} is not given in the table, then it may be estimated as the distance from the of the front wheel to the horizontal midpoint of the cargo area.

SUB = A Second Unit Body consists of the body structure and/or all the cargo carrying, work performing and/or load bearing components and/or equipment installed by a subsequent stage manufacturer on an incomplete vehicle, such that the incomplete vehicle becomes a completed vehicle.

CG_{hc} = Horizontal distance from the ℄ of the front wheels to the center of gravity [inches] of the chassis.

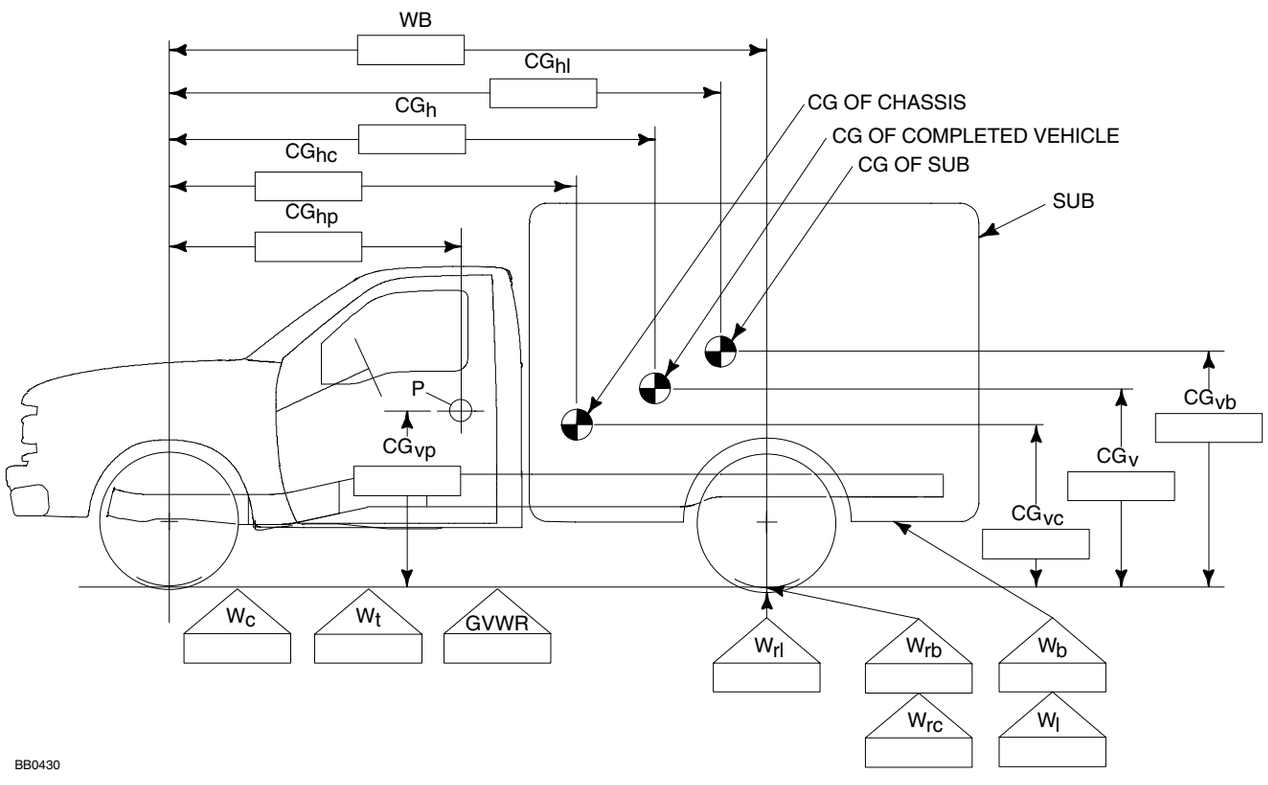

FMVSS AND CMVSS 105 HYDRAULIC BRAKE COMPLIANCE GUIDELINES FOR ALTERED VEHICLES

TABLE 7

This Weight Information Does Not Apply to Vehicles Over 4536 kg [10,000 lb] GVWR

SUPER DUTY F-SERIES	SECOND UNIT BODY MAXIMUM LIMITATIONS		MAX. UNLOADED VEHICLE WEIGHT Kilogram [pound]		
MODELS	SUB Weight Kilogram [pound]	Center of Gravity Height‡ Millimeter [inch]	Engine Size –Liter [cubic inch]		
			5.4L [330]	6.8L [413]	7.3LD [444]
F-250 Reg. Chassis Cab (4x2) 3480 mm [137 in] WB (56.00" CA)	816 [1800]	447 [17.6]	2904 [6400]	2904 [6400]	3198 [7050]
F-250 Reg. Chassis Cab (4x4) 3480 mm [137 in] WB (56.00" CA)	816 [1800]	447 [17.6]	3130 [6900]	3130 [6900]	3345 [7350]
F-250 Super Chassis Cab (4x2) 4013 mm [158 in] WB (56.00" CA)	816 [1800]	610 [24]	3108 [6850]	3108 [6850]	3289 [7250]
F-250 Super Chassis Cab (4x4) 4013 mm [158 in] WB (56.00" CA)	816 [1800]	610 [24]	3289 [7250]	3289 [7250]	3493 [7700]
F-250 Crew Chassis Cab (4x2) 4379 mm [172.4 in] WB (56.00" CA)	816 [1800]	610 [24]	3198 [7050]	3198 [7050]	3471 [7650]
F-250 Crew Chassis Cab (4x4) 4379 mm [172.4 in] WB (56.00" CA)	816 [1800]	610 [24]	3391 [7475]	3391 [7475]	3584 [7900]
F-350 Reg. Chassis Cab (4x2) 3480 mm [137 in] WB (56.00" CA)	816 [1800]	447 [17.6]	2904 [6400]	2904 [6400]	3198 [7050]
F-350 Reg. Chassis Cab (4x4) 3480 mm [137 in] WB (56.00" CA)	816 [1800]	447 [17.6]	3130 [6900]	3130 [6900]	3357 [7400]
F-350 Super Chassis Cab (4x2) 4013 mm [158 in] WB (56.00" CA)	816 [1800]	610 [24]	3108 [6850]	3108 [6850]	3379 [7450]
F-350 Super Chassis Cab (4x4) 4013 mm [158 in] WB (56.00" CA)	816 [1800]	610 [24]	3289 [7250]	3289 [7250]	3515 [7750]
F-350 Crew Chassis Cab (4x2) 4379 mm [172.4 in] WB (56.00" CA)	816 [1800]	610 [24]	3220 [7100]	3220 [7100]	3471 [7650]
F-350 Crew Chassis Cab (4x4) 4379 mm [172.4 in] WB (56.00" CA)	816 [1800]	610 [24]	3402 [7500]	3402 [7500]	3606 [7950]
F-350 Reg.Chassis Cab (4x2) 3576 mm [140.8 in] WB (60.00" CA)	816 [1800]	447 [17.6]	3539 [7800]	3539 [7800]	3539 [7800]
F-350 Reg. Chassis Cab (4x4) 3576 mm [140.8 in] WB (60.00" CA)	635 [1400]	447 [17.6]	3471 [7650]	3471 [7650]	3471 [7650]
F-350 Super Chassis Cab (4x2) 4110 mm [161.8 in] WB (60.00" CA)	816 [1800]	610 [24]	3720 [8200]	3720 [8200]	3720 [8200]
F-350 Super Chassis Cab (4x4) 4110 mm [161.8 in] WB (60.00" CA)	635 [1400]	610 [24]	3675 [8100]	3675 [8100]	3675 [8100]
F-350 Crew Chassis Cab (4x2) 4475 mm [176.2 in] WB (60.00" CA)	816 [1800]	610 [24]	3834 [8450]	3834 [8450]	3834 [8450]
F-350 Crew Chassis Cab (4x4) 4475 mm [176.2 in] WB (60.00" CA)	635 [1400]	610 [24]	3766 [8300]	3766 [8300]	3766 [8300]

‡ Vertical dimensions are measured from the top surface of the frame at a distance approximately 304.8 to 457.2 [12 to 18 in] from the rear of the cab.

TABLE 8

SUPER DUTY F-SERIES VEHICLES MINIMUM SUB WEIGHTS
8800 lb to 12,500 lb GVWR WIDE FRAME F-250/350 924 mm [36.4 in] Chassis Cabs

Model and GVWR kg [lb]	Cab Style	WB mm [in]	Minimum SUB kg [lb]
F-250 3989 [8800] F-350 4491 [9900] *	R/C	3480 [137]	172 [380]
	S/C	4013 [158]	
	C/C	4380 [172.4]	
F-350 Gasoline 5077 [11,200] ** Diesel 5216 [11,500] **	R/C	3480 [137]	190 [420]
	S/C	4013 [158]	
	C/C ***	4380 [172.4]	

SUPER DUTY F-SERIES VEHICLES MINIMUM SUB WEIGHTS
9900 LB TO 19,000 LB GVWR NARROW FRAME
F-350 866 mm [34 in] and F-450/550 868 mm [34.2 in] Chassis Cabs

Model and GVWR kg [lb]	Cab Style	WB mm [in]	Minimum SUB kg [lb]
F-350 4488 [9900] *	R/C	3576 [140.8]	453 [1000]
	S/C	4110 [161.8]	317 [700]
	C/C	4475 [176.2]	172 [380]
F-350 5077 [11,200] ** F-350 5667 [12,500] **** (7.3L Diesel)	R/C	3576 [140.8]	190 [420]
	S/C	4110 [161.8]	
	R/C	4186 [164.8]	204 [450]
	C/C	4475 [176.2]	190 [420]
F-450 6800 [15,000]	R/C	3576 [140.8]	190 [420]
	S/C	4110 [161.8]	
	R/C	4186 [164.8]	204 [450]
		4795 [188.8]	227 [500]
	C/C	4475 [176.2]	190 [420]
		5085 [200.2]	204 [450]
	R/C	5100 [200.8]	249 [550]
F-550 7933 [17,500]	R/C	3576 [140.8]	190 [420]
	S/C	4110 [161.8]	
	R/C	4186 [164.8]	204 [450]
		4795 [188.8]	227 [500]
	C/C	4475 [176.2]	190 [420]
		5085 [200.2]	204 [450]
	R/C	5100 [200.8]	249 [550]
F-550 8618 [19,000]	R/C	4186 [164.8]	204 [450]
		5100 [200.8]	249 [550]

Cab Style:
R/C = Regular Cab
S/C = SuperCab
C/C = Crew Cab

* GVWR shown for 49 state applications, California models are 90.7 kg [200] less.
** GVWR shown for 48 state applications, California and Hawaii models are 4990 kg [1100] less.
*** Crew Cab, long box [172.4 in WB], 48 states, Diesel Engine; 5216 kg [11,500] GVWR.
**** Hawaii only; 4990 kg [11,000].

FMVSS AND CMVSS 105 HYDRAULIC BRAKE COMPLIANCE GUIDELINES FOR ALTERED VEHICLES

TABLE 7

This Weight Information Does Not Apply to Vehicles Over 4536 kg [10,000 lb] GVWR

SUPER DUTY F-SERIES	SECOND UNIT BODY MAXIMUM LIMITATIONS		MAX. UNLOADED VEHICLE WEIGHT Kilogram [pound]		
MODELS	SUB Weight Kilogram [pound]	Center of Gravity Height‡ Millimeter [inch]	Engine Size –Liter [cubic inch]		
			5.4L [330]	6.8L [413]	7.3LD [444]
F-250 Reg. Chassis Cab (4x2) 3480 mm [137 in] WB (56.00" CA)	816 [1800]	447 [17.6]	2904 [6400]	2904 [6400]	3198 [7050]
F-250 Reg. Chassis Cab (4x4) 3480 mm [137 in] WB (56.00" CA)	816 [1800]	447 [17.6]	3130 [6900]	3130 [6900]	3345 [7350]
F-250 Super Chassis Cab (4x2) 4013 mm [158 in] WB (56.00" CA)	816 [1800]	610 [24]	3108 [6850]	3108 [6850]	3289 [7250]
F-250 Super Chassis Cab (4x4) 4013 mm [158 in] WB (56.00" CA)	816 [1800]	610 [24]	3289 [7250]	3289 [7250]	3493 [7700]
F-250 Crew Chassis Cab (4x2) 4379 mm [172.4 in] WB (56.00" CA)	816 [1800]	610 [24]	3198 [7050]	3198 [7050]	3471 [7650]
F-250 Crew Chassis Cab (4x4) 4379 mm [172.4 in] WB (56.00" CA)	816 [1800]	610 [24]	3391 [7475]	3391 [7475]	3584 [7900]
F-350 Reg. Chassis Cab (4x2) 3480 mm [137 in] WB (56.00" CA)	816 [1800]	447 [17.6]	2904 [6400]	2904 [6400]	3198 [7050]
F-350 Reg. Chassis Cab (4x4) 3480 mm [137 in] WB (56.00" CA)	816 [1800]	447 [17.6]	3130 [6900]	3130 [6900]	3357 [7400]
F-350 Super Chassis Cab (4x2) 4013 mm [158 in] WB (56.00" CA)	816 [1800]	610 [24]	3108 [6850]	3108 [6850]	3379 [7450]
F-350 Super Chassis Cab (4x4) 4013 mm [158 in] WB (56.00" CA)	816 [1800]	610 [24]	3289 [7250]	3289 [7250]	3515 [7750]
F-350 Crew Chassis Cab (4x2) 4379 mm [172.4 in] WB (56.00" CA)	816 [1800]	610 [24]	3220 [7100]	3220 [7100]	3471 [7650]
F-350 Crew Chassis Cab (4x4) 4379 mm [172.4 in] WB (56.00" CA)	816 [1800]	610 [24]	3402 [7500]	3402 [7500]	3606 [7950]
F-350 Reg.Chassis Cab (4x2) 3576 mm [140.8 in] WB (60.00" CA)	816 [1800]	447 [17.6]	3539 [7800]	3539 [7800]	3539 [7800]
F-350 Reg. Chassis Cab (4x4) 3576 mm [140.8 in] WB (60.00" CA)	635 [1400]	447 [17.6]	3471 [7650]	3471 [7650]	3471 [7650]
F-350 Super Chassis Cab (4x2) 4110 mm [161.8 in] WB (60.00" CA)	816 [1800]	610 [24]	3720 [8200]	3720 [8200]	3720 [8200]
F-350 Super Chassis Cab (4x4) 4110 mm [161.8 in] WB (60.00" CA)	635 [1400]	610 [24]	3675 [8100]	3675 [8100]	3675 [8100]
F-350 Crew Chassis Cab (4x2) 4475 mm [176.2 in] WB (60.00" CA)	816 [1800]	610 [24]	3834 [8450]	3834 [8450]	3834 [8450]
F-350 Crew Chassis Cab (4x4) 4475 mm [176.2 in] WB (60.00" CA)	635 [1400]	610 [24]	3766 [8300]	3766 [8300]	3766 [8300]

‡ Vertical dimensions are measured from the top surface of the frame at a distance approximately 304.8 to 457.2 [12 to 18 in] from the rear of the cab.

TABLE 8

SUPER DUTY F-SERIES VEHICLES MINIMUM SUB WEIGHTS

8800 lb to 12,500 lb GVWR WIDE FRAME F-250/350 924 mm [36.4 in] Chassis Cabs

Model and GVWR kg [lb]	Cab Style	WB mm [in]	Minimum SUB kg [lb]
F-250 3989 [8800] F-350 4491 [9900] *	R/C	3480 [137]	172 [380]
	S/C	4013 [158]	
	C/C	4380 [172.4]	
F-350 Gasoline 5077 [11,200] ** Diesel 5216 [11,500] **	R/C	3480 [137]	190 [420]
	S/C	4013 [158]	
	C/C ***	4380 [172.4]	

SUPER DUTY F-SERIES VEHICLES MINIMUM SUB WEIGHTS

9900 LB TO 19,000 LB GVWR NARROW FRAME

F-350 866 mm [34 in] and F-450/550 868 mm [34.2 in] Chassis Cabs

Model and GVWR kg [lb]	Cab Style	WB mm [in]	Minimum SUB kg [lb]
F-350 4488 [9900] *	R/C	3576 [140.8]	453 [1000]
	S/C	4110 [161.8]	317 [700]
	C/C	4475 [176.2]	172 [380]
F-350 5077 [11,200] ** F-350 5667 [12,500] **** (7.3L Diesel)	R/C	3576 [140.8]	190 [420]
	S/C	4110 [161.8]	
	R/C	4186 [164.8]	204 [450]
	C/C	4475 [176.2]	190 [420]
F-450 6800 [15,000]	R/C	3576 [140.8]	190 [420]
	S/C	4110 [161.8]	
	R/C	4186 [164.8]	204 [450]
		4795 [188.8]	227 [500]
	C/C	4475 [176.2]	190 [420]
		5085 [200.2]	204 [450]
	R/C	5100 [200.8]	249 [550]
F-550 7933 [17,500]	R/C	3576 [140.8]	190 [420]
	S/C	4110 [161.8]	
	R/C	4186 [164.8]	204 [450]
		4795 [188.8]	227 [500]
	C/C	4475 [176.2]	190 [420]
		5085 [200.2]	204 [450]
	R/C	5100 [200.8]	249 [550]
F-550 8618 [19,000]	R/C	4186 [164.8]	204 [450]
		5100 [200.8]	249 [550]

Cab Style:
R/C = Regular Cab
S/C = SuperCab
C/C = Crew Cab

* GVWR shown for 49 state applications, California models are 90.7 kg [200] less.
** GVWR shown for 48 state applications, California and Hawaii models are 4990 kg [1100] less.
*** Crew Cab, long box [172.4 in WB], 48 states, Diesel Engine; 5216 kg [11,500] GVWR.
**** Hawaii only; 4990 kg [11,000].

U.S. AND CANADA SAFETY STANDARDS INCOMPLETE VEHICLES

Each Ford incomplete vehicle product is accompanied by an *Incomplete Vehicle Manual* (see manuals on this page). These manuals contain the information required to comply with Part 568 of Title 49 of the Code of Federal Regulations for vehicles offered for sale in the United States and with Section 6 of the Canadian Motor Vehicle Safety Regulations for vehicles offered for sale in Canada. Ford incomplete vehicles offered for sale in the United States and Canada will be provided with an *Incomplete Vehicle Manual.*

The manual must be forwarded with the vehicle until the final stage manufacturer has installed a Safety Compliance label on the completed vehicle.

INCOMPLETE VEHICLE MANUAL COVER

The cover of the IVM identifies the incomplete vehicle configurations for which compliance representations are identified. Also, a label is affixed to the cover which includes the vehicle identification number (VIN) for the specific vehicle to which the manual belongs. The label identifies the following information which pertains only to the vehicle with the corresponding VIN.

- The GVWR
- The front and rear GAWRs
- Tire and wheel size
- Cold tire inflation pressure (PSI)
- Completed vehicle type(s) into which the incomplete vehicle may be manufactured.
- Optional prep package when the vehicle is so equipped.

INCOMPLETE VEHICLE LABEL

Each incomplete vehicle as manufactured by Ford Motor Company, will have an incomplete vehicle label affixed to the driver-door lock pillar. The sample labels on this page are typical of those provided for U.S. production. A detailed explanation of all label information is available in the *Ford Truck Source Book* for the appropriate model year, at your local Ford Dealer.

The 5th, 6th & 7th digits of the Vehicle Identification Number (VIN) will identify the incomplete vehicle type. These three digits are used in the Completed Vehicle Type chart on page 66 of this section. Additional VIN information is available in the *Ford Truck Source Book* for the appropriate model year.

California Air Resources Board (CARB), requires a Vehicle Emission Control Label with a vehicle identification number (VIN) having a non-contact, bar-code reading wand capability. The bar-code directly below the VIN on the incomplete vehicle label will comply with this regulation.

OPTIONAL PREP PACKAGES

Incomplete vehicles produced by Ford Motor Company, in some instances, are equipped with optional prep packages. The completed vehicle type chart on page 66 of this section, will identify incomplete vehicles and the optional Prep Packages that may be required by Ford if final stage manufacturers wish to rely on the Statements of Conformity or, in some cases, preserve the Ford new vehicle warranty.

If an incomplete vehicle is equipped with an optional Prep Package, both the incomplete vehicle label affixed to the vehicle and the label on the front of the IVM will identify the Prep Package.

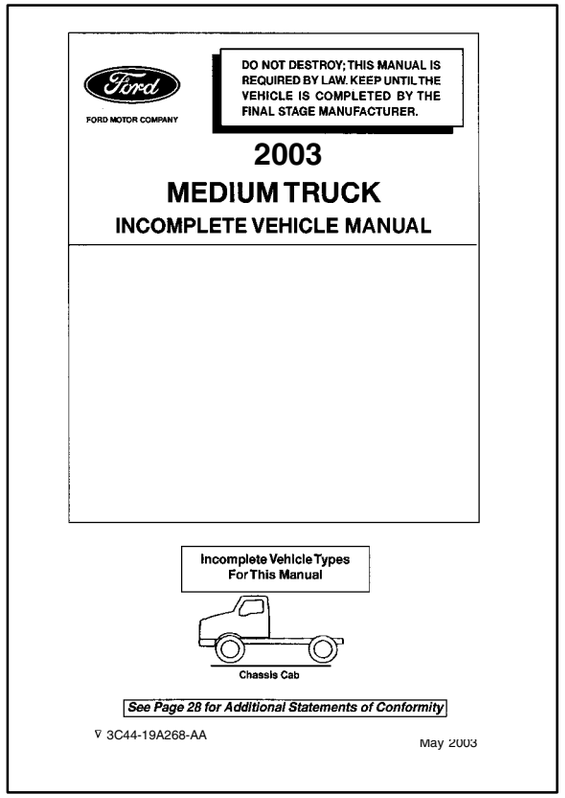

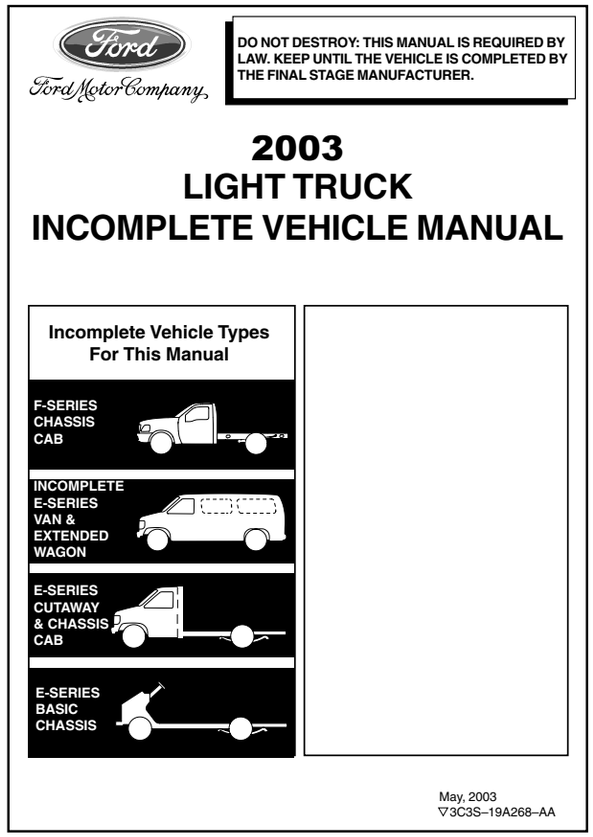

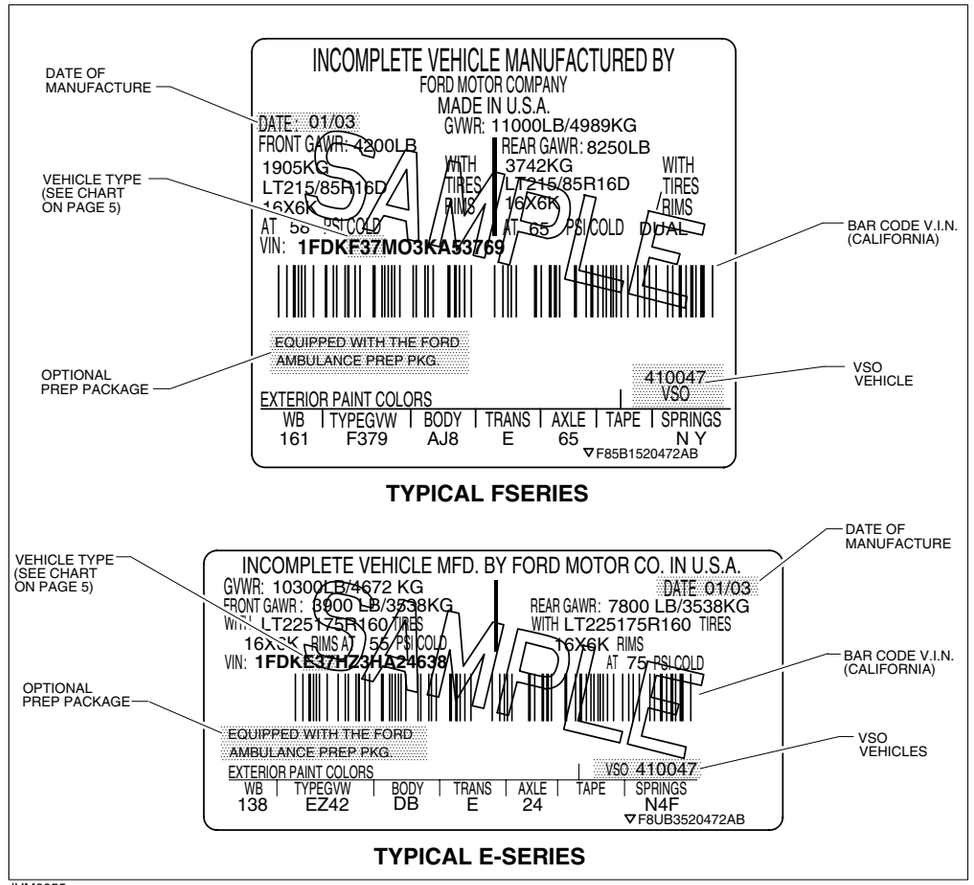

IVM0055

U.S. AND CANADA SAFETY STANDARDS INCOMPLETE VEHICLES

The Canadian Motor Vehicle Safety Act and Regulations require installation of an incomplete vehicle certification label with the National Safety Mark on it on vehicles manufactured for sale in Canada. A label representative of those installed by Ford assembly plants is shown below.

All chassis cabs manufactured for sale in the United States are required by Part 567.5 of Title 49 of the Code of Federal Regulations to bear a chassis cab conformity label. For current model year, Ford Truck Chassis Cabs include: F-350/450/550 and E-350/450/550 Chassis Cabs. A sample label is shown below.

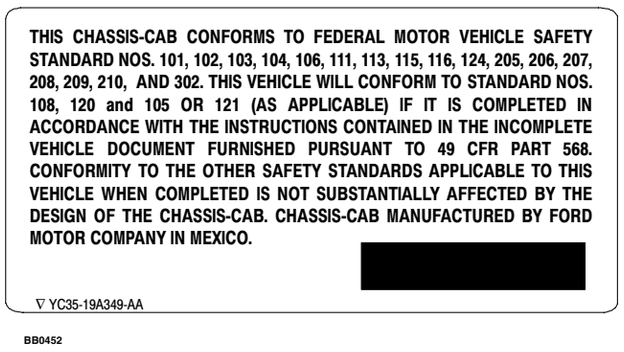

Medium trucks get a label similar to the chassis cab label shown below.
(Sample shown is for a Chassis Cab manufactured in the United States).

The following section headed “Multi-Stage Manufacture: Safety Certification Regulations” identifies some of the responsibilities of the incomplete, intermediate and final stage vehicle manufacturers pursuant to Part 567.5 and 568 of Title 49 of the Code of Federal Regulations and/or under the National Traffic and Motor Vehicle Safety Act of 1966 in the United States and the Canada Motor Vehicle Safety Act in Canada.

MULTI-STAGE MANUFACTURE: SAFETY CERTIFICATION REGULATIONS

United States Manufacturers

Requirements concerning certification of compliance to Federal Motor Vehicle Safety Standards (FMVSS) of vehicles manufactured in two or more stages are contained in Part 567.5 and 568 of Title 49, Code of Federal Regulations. These regulations set forth the requirements for (i) manufacturers of completed motor vehicles; (ii) persons who, prior to the first retail sale, alter a certified vehicle in a manner that affects its compliance; (iii) persons who perform manufacturing operations on an incomplete vehicle in furtherance of its completion and (iv) persons who do not alter certified vehicles or do so with readily attachable components, in such a manner that the vehicle’s stated weight ratings are still valid. These regulations require among other things that each completed motor vehicle has a permanently affixed label certifying that such vehicle conformed with all applicable FMVSS on the stated date of manufacture.

All completed vehicle manufactured by Ford Motor Company have attached an *Incomplete Vehicle Manual* (IVM). This manual contains information which an incomplete vehicle manufacturer is required to furnish subsequent stage manufacturers under Part 568 of Title 49, Code of Federal Regulations. This information includes the identification of the particular vehicle to which the manual applies, the designation by Ford of the type of vehicle into which the incomplete vehicle may be manufactured, and a listing of the applicable FMVSS. Each applicable standard is accompanied by a statement indicating the degree of compliance of the vehicle with that standard at the time of manufacture by Ford. In some cases, Ford has provided statements as to the conditions under which the vehicle may be manufactured so as to conform when completed. Ford makes no representation that the conditions indicated represent the only conditions under which the vehicle may be completed; however, when a subsequent stage manufacturer deviates from these conditions, it must independently provide the basis for certification to the particular standard. In those cases where conformity with a standard is not substantially affected by the incomplete vehicle design, Ford has provided a statement indicating that no representation as to conformity with the standard is made.

Part 568 of Title 49, Code of Federal Regulations, requires the incomplete vehicle manufacturer to specify the Gross Axle Weight Rating (GAWR) for each axle of the vehicle, and the Gross Vehicle Weight Rating (GVWR) of the total vehicle. Ford provides this information on the cover of the *Incomplete Vehicle Manual* that accompanies each incomplete vehicle as it leaves Ford’s assembly plant.

Chassis Cabs manufactured by Ford Motor Company are required to bear a “Chassis-Cab Conformity Label.” This label contains statements which a Chassis-Cab manufacturer is required to furnish under Part 567.5 of Title 49 of the Code of Federal Regulations. These statements specify the FMVSS to which the Chassis-Cab conforms, the FMVSS to which the vehicle will conform if completed in accordance with the instructions contained in the incomplete vehicle manual, and that conformity with the other FMVSS is not substantially affected by the design of the Chassis-Cab. Also specified is the manufacturer of the Chassis-Cab and date of manufacture. (See sample above.)

Canadian Manufacturers

Canadian requirements concerning certification of compliance to Canada Motor Vehicle Safety Standards of vehicles require each completed truck, truck tractor, bus, school bus, and multipurpose passenger vehicle (except chassis-cabs and truck tractors not fitted with fifth wheel couplings) to have a label permanently affixed that includes the National Safety Mark and a statement certifying that the vehicle conformed with all applicable CMVSS on the stated date of manufacture.

All completed trucks, buses, and multipurpose passenger vehicles manufactured by Ford Motor Company have the required certification label which contains the National Safety Mark affixed to it when the vehicle leaves the assembly plant. This certification label on a completed truck, bus, or multipurpose passenger vehicle specifies the Gross Axle Weight Rating (GAWR) for each axle of the vehicle and the Gross Vehicle Weight Rating (GVWR) of the total vehicle. Any person who alters a completed truck, bus, or multipurpose passenger vehicle prior to the first retail sale may be considered a manufacturer and, therefore, should be aware of the legal obligations arising from the Canadian Motor Vehicle Safety Act and Regulations.

All chassis cabs manufactured by Ford Motor Company have a label that includes the National Safety Mark and an *Incomplete Vehicle Manual.*

Effective September 1, 2002, Canadian Motor Vehicle Safety Regulations are revised to harmonize with the regulations in the United States. The regulations and documentation requirements are nearly the same. The *Incomplete Vehicle Manual* is now required in both nations and it has been revised to reflect the new regulations.

Guidelines for revising GAWR/GVWR capacities for Truck Incomplete Vehicles

Representations as to the compliance of Ford incomplete vehicles to United States and Canadian Federal Safety Regulations are provided in an *Incomplete Vehicle Manual* attached to each incomplete vehicle. While purchasers and dealers should seek to order incomplete vehicles having GAWR and GVWR that correspond to the intended application of the vehicle, it may be appropriate in some circumstances for final stage manufacturers to revise the weight ratings of a particular vehicle if the vehicle is revised so that it has the same components and specifications as the corresponding Ford factory-built unit with identical weight ratings. In such cases, it may be appropriate for subsequent stage manufacturers to rely on the representation in the *Incomplete Vehicle Manual* in certifying that the completed vehicle conforms to all applicable motor vehicle safety standards. Ford Truck Body Builder Advisory Service should be consulted in such cases.

THE FOLLOWING CHARTS RELATE FORD MOTOR COMPANY TRUCK PRODUCTS TO FEDERAL VEHICLE CLASSIFICATIONS (CHART A) AND SPECIFY THE MOTOR VEHICLE STANDARDS WHICH APPLY TO EACH CLASSIFICATION (CHART B).

CHART A
COMPLETED VEHICLES – CERTIFIED AS MANUFACTURED BY FORD MOTOR COMPANY

Model	FWD	4x2	4x2 (4WD)	AWD	Certified For Use As
E-Series Van		E14, E24, S24, E34, S34			Truck
E-Series Wagon		E11, E31, S31			MPV or Bus (not School Bus)
Windstar Van	A54				Truck
Windstar Wagon	A50, A51, A52, A53, A55, A56 A57, A58				MPV
Ranger Regular Pickup		R10	R11		Truck
Ranger SuperCab Pickup		R14, R44	R15, R45		Truck
F150 Regular Pickup		F07, F17	F08, F18		Truck
F150 SuperCab Pickup		X07, X17	X08, X18		Truck
F150 SuperCrew Pickup		W07	W08		Truck
Super Duty F-Series Regular Pickup - SRW		F20, F30	F21, F31		Truck
Super Duty F-Series Regular Pickup - DRW		F32	F33		Truck
Super Duty F-Series SuperCab Pickup - SRW		X20, X30	X21, X31		Truck
Super Duty F-Series SuperCab Pickup - DRW		X32	X33		Truck
Super Duty F-Series Crew Cab Pickup - SRW		W20, W30	W21, W31		Truck
Super Duty F-Series Crew Cab Pickup - DRW		W32, W42, W67	W33, W43		Truck

CHART B
INCOMPLETE VEHICLES REQUIRE COMPLETION AND CERTIFICATION BY SUBSEQUENT STAGE MANUFACUTURERS

5TH 6TH 7TH Vin Digit	Model	TRUCK	TRUCK (WALK-IN VAN)	MPV	MPV (AMBULANCE)	BUS (NOT SCHOOL BUS)	SCHOOL BUS
	Incomplete Vehicles	Complete Vehicles					
E-SERIES							
C35, C45, C55		X					
E14		X		5			
E24		X		5			
E27†		X					
E29			X				
E34		X		5	1		
E35		X		3	1	4	2
E39			X				
E45		X		3	1	4	2
E49			X				
E55		X					7
S24		X		5			
S31		X		6		6	
S34		X		5	1	5	
SUPER DUTY F-SERIES							
F20, F30, F34		X			1		
F21, F31, F35		X			1		
F32, F36, F46, F56		X			1		
F33, F37, F47, F57		X			1		
F53				X		X	
F65, F75		X					
W20, W30, W34		X			1		
W21, W31, W35		X			1		
W32, W36, W46, W56		X			1		
W33, W37, W47, W57		X			1		
W65, W75		X					
X20, X30, X34		X			1		
X21, X31, X35		X			1		
X32, X36, X46, X56		X			1		
X33, X37, X47, X57		X			1		
X65, X75		X					

† Vehicle Special Order
(1) Ambulance Prep Package (Super Duty F-Series available on narrow frame Chassis Cab models only)
(2) School Bus Prep Package
(3) Motorhome Prep Package
(4) Shuttle Bus Prep Package
(5) Recreatiional Trim
(6) Commuter Van Package
(7) School Bus Prep Package - late availability on E550

IMPORTANT: Ford Motor Company makes no representation that the completed vehicle types listed in Chart B are the only vehicle types appropriate for the incomplete vehicles listed. However, if a unit is completed as a vehicle type other than as listed above, the Statements of Conformity in the *Incomplete Vehicle Manual* may not be applicable.

U.S. AND CANADA SAFETY STANDARDS

2003
MODEL YEAR

F/CMVSS Number	Title of Standard	Bus (Not School Bus)	School Bus	Truck (Not Walk-In Van)	MPV	Truck (Walk-in Van)	(1) Equip.
101	Control Location, Identification and Illumination	X	X	X	X	X	
102	Transmission Shift Lever Sequence, Starter Interlock & Transmission Braking Effect	X	X	X	X	X	
103	Windshield Defrosting & Defogging Systems	X	X	X	X	X	
104	Windshield Wiping and Washing Systems	X	X	X	X	X	
105	Hydraulic and Electric Brake Systems	X	X	X	X	X	
106	Brake Hoses	X	X	X	X	X	X
108	Lamps, Reflective Devices & Associated Equipment	X	X	X	X	X	X
108.1	Headlamps (Canada only)	X	X	X	X	X	
111	Rearview Mirrors	X	X	X	X	X	
113	Hood Latch Systems	X	X	X	X	X	
114	Theft Protection			X(2)	X(2)		
115	Vehicle Identification Number (Canada only)	X	X	X	X	X	
116	Hydraulic Brake Fluids	X	X	X	X	X	X
118	Power Operated Window, Partition, and Roof Panel Systems			X(2)	X(2)	X(2)	
119	New Pneumatic Tires for Vehicles Other Than Passenger Cars						X
120	Tire Selection and Rims for Motor Vehicles Other Than Passenger Cars	X	X	X	X	X	X
124	Accelerator Control Systems	X	X	X	X	X	
131	School Bus Pedestrian Safety Devices		X				
135	Light Vehicle Brake Systems	X(10)	X(10)	X(10)	X(10)	X(10)	
201	Occupant Protection in Interior Impact	X(2)(9)	X(2)(9)	X(2)	X(2)		
202	Head Restraints	X(2)	X(2)	X(2)	X(2)	X(2)	
203	Impact Protection for the Driver from the Steering Control System	X(2)	X(2)	X(2)	X(2)		
204	Steering Control Rearward Displacement	X(3)	X(3)	X(3)	X(3)		
205	Glazing Materials	X	X	X	X	X	X
206	Door Locks and Door Retention Components			X	X	X	
207	Seating System	X	X	X	X	X	
208	Occupant Crash Protection	X	X	X(6)(5)	X(6)(5)	X(6)	X
209	Seat Belt Assemblies	X	X	X	X		
210	Seat Belt Assembly Anchorages	X	X	X	X	X	
210.1	User-Ready Tether Anchroages for Restraint Systems (Canada only)			X(8)	X(8)		
210.2	Lower Anchors for Child Restraints (Canada only)			X(8)	X(8)		
212	Windshield Mounting	X(2)	X(2)	X(2)	X(2)		
213	Child Restraint Systems	X	X	X	X	X	X
214	Side Impact Protection	X(2)(7)	X(2)	X(2)(7)	X(2)(7)		
217	Bus Window Retention and Release	X	X				
219	Windshield Zone Intrusion	X(2)	X(2)	X(2)	X(2)		

F/CMVSS Number	Title of Standard	Bus (Not School Bus)	School Bus	Truck (Not Walk-In Van)	MPV	Truck (Walk-in Van)	(1) Equip.
220	School Bus Rollover Protection		X				
221	School Bus Body Joint Strength		X				
222	School Bus Passenger Seating and Crash Protection		X				
225	Child Restraint Anchorage Systems	X(8)	X(8)	X(8)	X(8)	X(8)	
301	Fuel System Integrity	X(2)	X	X(2)	X(2)	X(2)	
301.1	LPG Fuel Systems	X	X	X	X	X	
301.2	CNG Fuel Systems	X	X	X	X	X	
302	Flammability of Interior Materials	X	X	X	X	X	
303	Fuel System Integrity of CNG Vehicles	X(2)	X	X(2)	X(2)	X(2)	
304	CNG Fuel Container						X
PART 565.4	Vehicle Identification Number	X	X	X	X	X	
1106	Noise Emissions	X	X	X	X	X	

(1) Applicable to Equipment for use on applicable vehicle types.
(2) Applicable to vehicles with a GVWR of 4536 kg [10,000 lb] or less.
(3) Applicable to vehicles with a GVWR of 4536 kg [10,000 lb] or less and an unloaded vehicle weight of 2495 kg [5,500 lb] or less.
(4) Applicable to vehicles with a GVWR of 2722 kg [6,000 lb] or less.
(5) Injury criteria applicable to vehicles with a GVWR of 3856 kg [8,500 lb] or less and an unloaded vehicle weight of 2495 kg [5,500 lb] or less.
(6) Injury criteria is optional on Walk-in Van-Type Trucks, Motor Homes, vehicles manufactured for operation by persons with disabilities, etc.
(7) Dynamic Performance Requirements apply to MPV, truck or a bus with a GVWR of 2722 kg [6,000 lb] or less.
(8) Tether anchors and latch/ISO Fix lower anchors that are installed voluntarily or by regulation must comply with this Standard.
(9) Upper area head impact criteria is not applicable to vehicles with a GVWR greater than 3860 kg [8,510 lb].
(10) Applicable to vehicles with a GVWR of 3500 kg [7,716 lb] or less.

DIMENSIONAL DATA
RANGER REGULAR CAB STYLESIDE 4X2/4X4

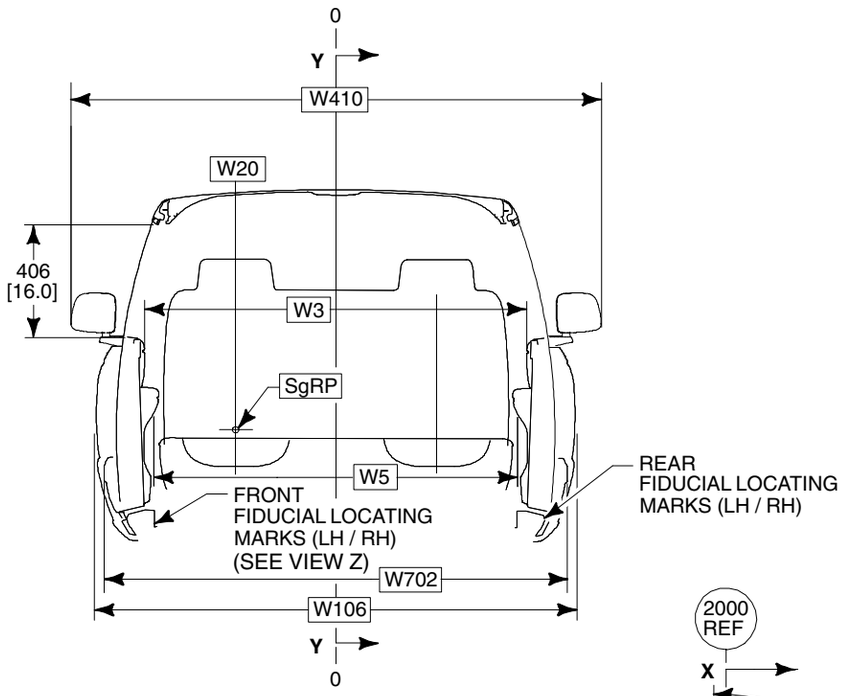

SEC **A**

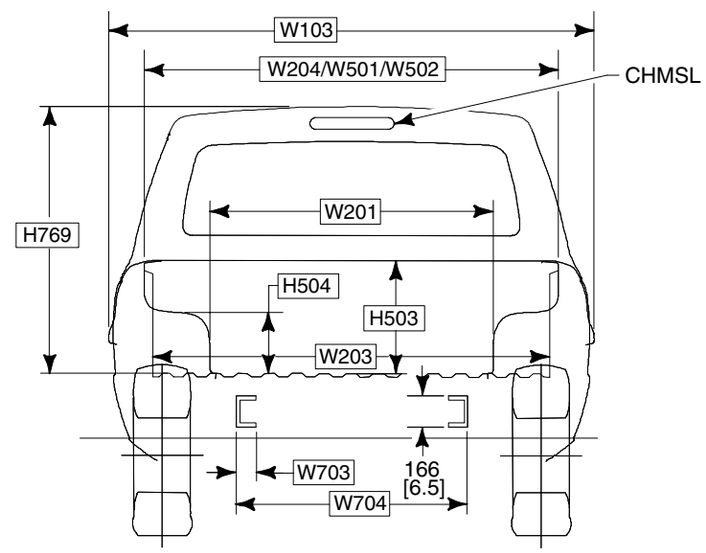

SEC **B**

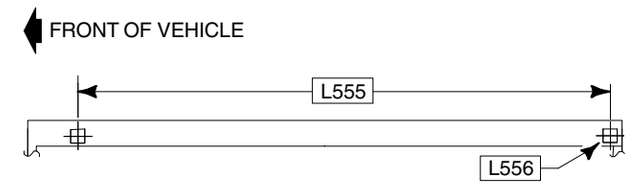

PARTIAL PLAN VIEW OF PICKUP BOX

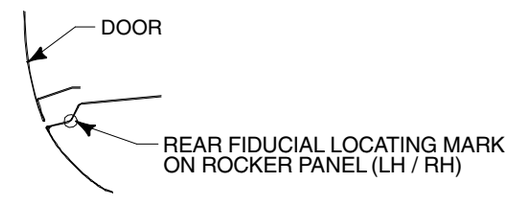

SEC **C**

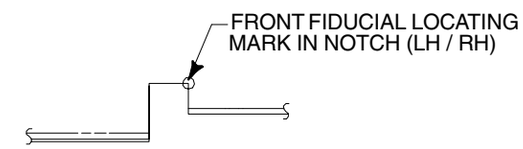

FRONT OF VEHICLE

VIEW **Z**

FIDUCIAL COORDINATE CHART				
COORDINATE		X	Y	Z
FRONT[1)]	RH/LH	300 [11.8]	±655 [±25.8]	137 [5.4]
REAR[2)]	RH/LH	1036 [40.8]	±790 [±31..1]	142 [5.6]

1) NOTCH (SEE VIEW Z)
2) MARK ON ROCKER PANEL (SEE SECTION C)

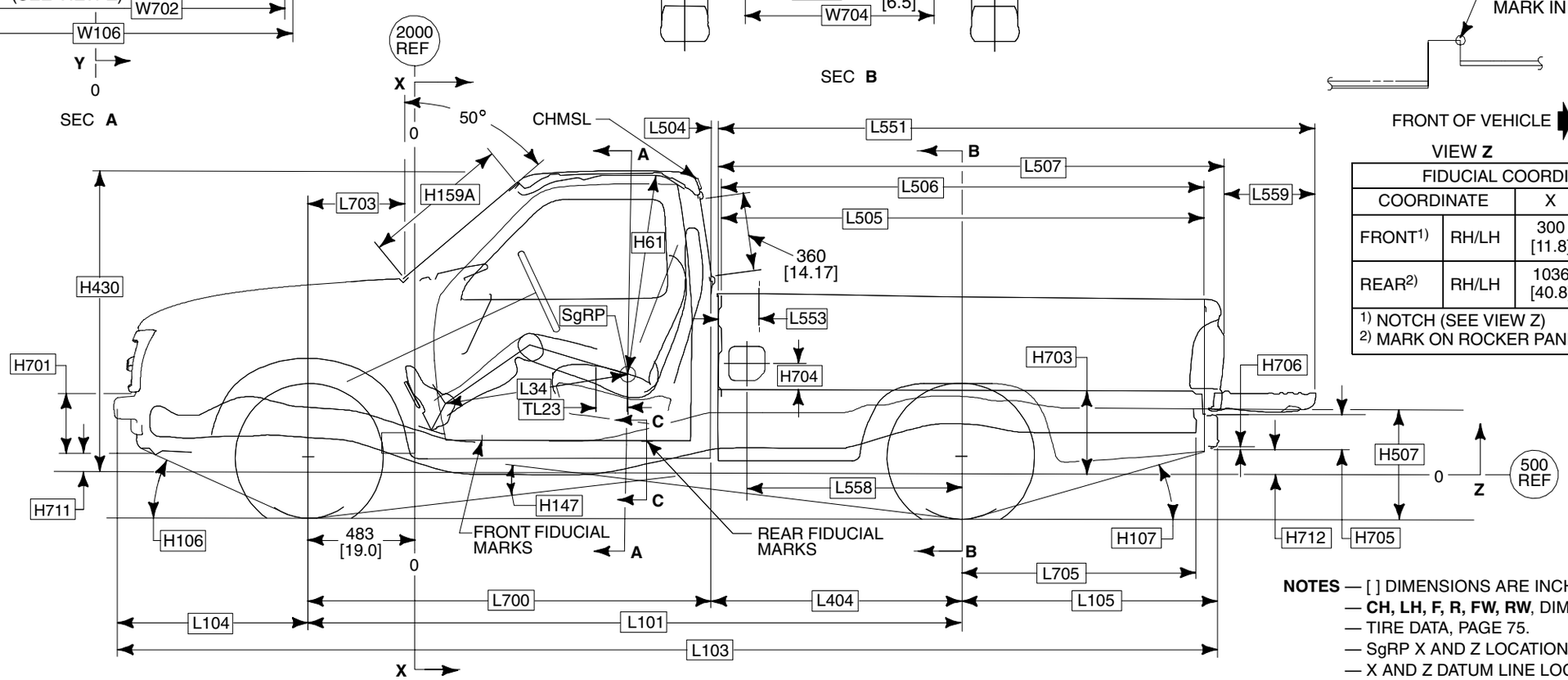

NOTES — [ ] DIMENSIONS ARE INCHES.
— **CH, LH, F, R, FW, RW**, DIMENSIONS, PAGE 74.
— TIRE DATA, PAGE 75.
— SgRP X AND Z LOCATIONS, PAGE 29.
— X AND Z DATUM LINE LOCATIONS, PAGE 76.

BB0334

DIMENSIONAL DATA
RANGER REGULAR CAB STYLESIDE 4X2/4X4

2003
MODEL YEAR

CHASSIS

CODE	DESCRIPTION	LWB		SWB	
		4X2	4X4	4X2	4X4
H106C	ANGLE OF APPROACH	23.3°	26.0°	23.3°	23.7°
H107C	ANGLE OF DEPARTURE	21.8°	25.1°	25.4°	28.5°
H147	RAMP BREAKOVER ANGLE	20.0°	20.0°	21.6°	20.9°
H507	TOP OF FRAME TO GROUND	843 [33.2]	892 [35.1]	843 [33.2]	892 [35.1]
L101	WHEELBASE	2983 [117.4]	2988 [117.6]	2831 [111.4]	2836 [111.6]
L103	OVERALL LENGTH	5067 [199.5]	5067 [199.5]	4763 [187.5]	4763 [187.5]
L104	FRONT OVERHANG	845 [33.3]	845 [33.3]	845 [33.3]	845 [33.3]
L105	REAR OVERHANG	1239 [48.8]	1234 [48.6]	1086 [42.8]	1082 [42.6]
L404	CAB TO ℄ OF REAR AXLE	1105 [43.5]	1107 [43.6]	955 [37.6]	955 [37.6]
L700	℄ OF FRONT AXLE TO END OF CAB	1880 [74.0]	1880 [74.0]	1880 [74.0]	1880 [74.0]
L705	℄ REAR AXLE TO END OF FRAME	1046 [41.2]	1046 [41.2]	894 [35.2]	894 [35.2]
W703	FRAME RAIL WIDTH	74 [2.9]	74 [2.9]	74 [2.9]	74 [2.9]
W704	WIDTH — REAR FRAMES	834 [32.8]	834 [32.8]	834 [32.8]	834 [32.8]

PICKUP BODY

CODE	DESCRIPTION		LWB	SWB
	NOMINAL CARGO BODY SIZE		7 FT.	6 FT.
H503	CARGO BODY HEIGHT		418 [16.4]	418 [16.4]
H504	WHEELHOUSE HEIGHT		226 [8.9]	227 [8.9]
H703	Z DATUM LINE TO CARGO BODY FLOOR	4X2	389 [15.3]	391 [15.4]
		4X4	439 [17.3]	442 [17.4]
H704	TOP OF FLOOR TO ℄ OF FUEL FILLER		132 [5.2]	132 [5.2]
H705	REAR BUMPER HEIGHT		178 [7.0]	178 [7.0]
H706	BOTTOM OF REAR BUMPER TO TOP OF HITCH PLATE		43 [1.7]	43 [1.7]
H712	Z DATUM LINE TO BOTTOM OF REAR BUMPER	4X2	99 [3.9]	102 [4.0]
		4X4	127 [5.0]	152 [6.0]
H769	TOP OF FLOOR TO TOP OF CAB @ ℄ REAR WHEELS		975 [38.4]	975 [38.4]
L504	CAB TO PICKUP BODY		21 [0.8]	21 [0.8]
L505	CARGO BODY LENGTH @ FLOOR		2151 [84.7]	1834 [72.2]
L506	CARGO BODY LENGTH @ BELT		2133 [84.0]	1829 [72.0]
L507	CARGO BODY OVERALL LENGTH		2246 [88.4]	1936 [76.2]
L553	FRONT OF BOX TO ℄ STAKE #1		180 [7.1]	180 [7.1]
L555	℄ STAKE #1 TO ℄ STAKE #2		1925 [75.8]	1623 [63.9]
L556	STAKE POCKET SIZE		52 X 40 [2 X 1.6]	52 X 40 [2 X 1.6]
L558	℄ REAR AXLE TO ℄ FUEL FILLER	4X2	775 [30.5]	777 [30.6]
		4X4	777 [30.6]	777 [30.6]
L559	OPEN TAILGATE		409 [16.1]	409 [16.1]
W201	CARGO WIDTH BETWEEN WHEELHOUSE		1026 [40.4]	1026 [40.4]
W203	REAR OPENING WIDTH AT FLOOR		1320 [52.0]	1320 [52.0]
W204	TAILGATE OPENING AT BELT		1379 [54.3]	1379 [54.3]
W501	CARGO BODY WIDTH AT BELT		1377 [54.2]	1377 [54.2]
W502	MAXIMUM INSIDE BOX		1382 [54.4]	1382 [54.4]
V5	CARGO VOLUME — LITERS/CU.FT.		1231.9 43.4	1057.4 37.3

CAB

CODE	DESCRIPTION		LWB	SWB
H61	EFFECTIVE HEADROOM W/HEADLINER		999 [39.3]	999 [39.3]
H159A	WINDSHIELD HEIGHT		673 [26.5]	673 [26.5]
H430	Z DATUM LINE TO TOP OF CAB	4X2	1318 [51.9]	1308 [51.5]
		4X4	1351 [53.2]	1351 [53.2]
H701	FRONT BUMPER HEIGHT *	4X2	358 [14.1]	358 [14.1]
		4X4	277 [10.9]	277 [10.9]
H711	Z DATUM LINE TO BOTTOM OF BUMPER *	4X2	–53 [–2.1]	–53 [–2.1]
		4X4	43 [1.7]	43 [1.7]
TL23	SEAT TRACK TRAVEL		200 [7.8]	200 [7.8]
L34	MAXIMUM EFFECTIVE LEG ROOM		1077 [42.4]	1077 [42.4]
L703	℄ FRONT AXLE TO COWL POINT		442 [17.4]	442 [17.4]
W3	SHOULDER ROOM	4X2	1367 [53.8]	1367 [53.8]
		4X4	1367 [53.8]	1367 [53.8]
W5	HIP ROOM		1338 [52.7]	1338 [52.7]
W20	SgRP (Y)		–365 [–14.4]	–365 [–14.4]
W103	VEHICLE WIDTH	4X2	1762 [69.4]	1762 [69.4]
		4X4	1788 [70.4]	1788 [70.4]
W106	FRONT FENDER WIDTH	4X2	1756 [69.1]	1756 [69.1]
		4X4	1782 [70.1]	1782 [70.1]
W410	OVERALL WIDTH WITH STANDARD MIRRORS		1954 [76.9]	1954 [76.9]
W702	FRONT BUMPER WIDTH		1687 [66.4]	1687 [66.4]

* Includes lower valance panel.

NOTES — [ ] DIMENSIONS ARE INCHES.
— DIMENSIONS ARE AT CURB HEIGHTS.

DIMENSIONAL DATA
RANGER SUPERCAB STYLESIDE 4X2/4X4

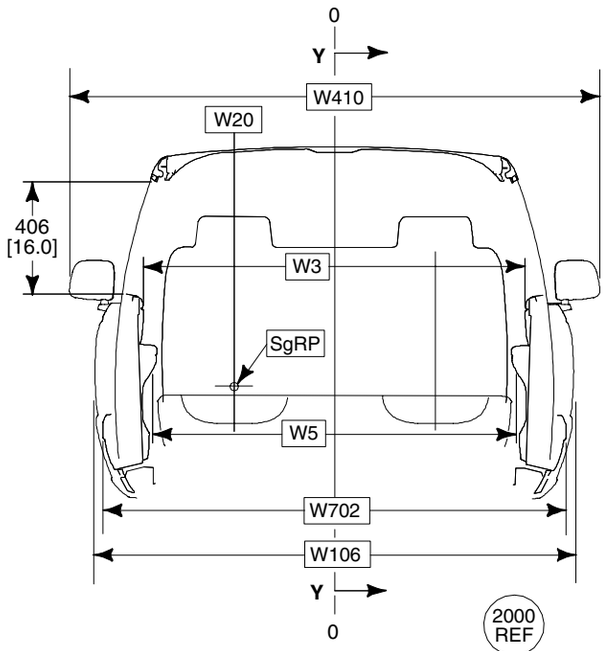

SEC **A**

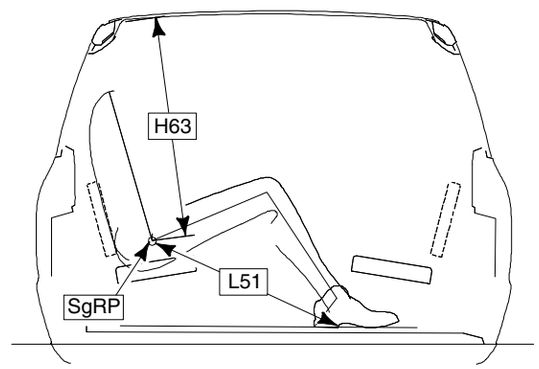

SEC **B**

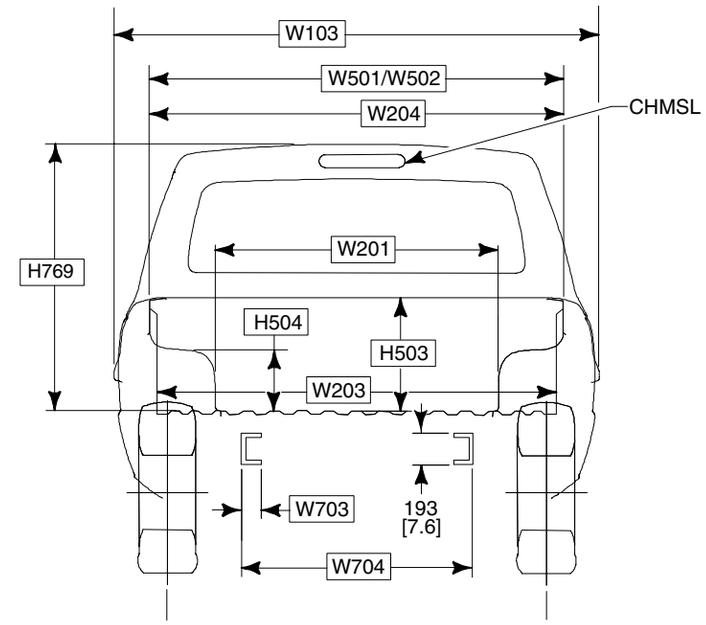

SEC **C**

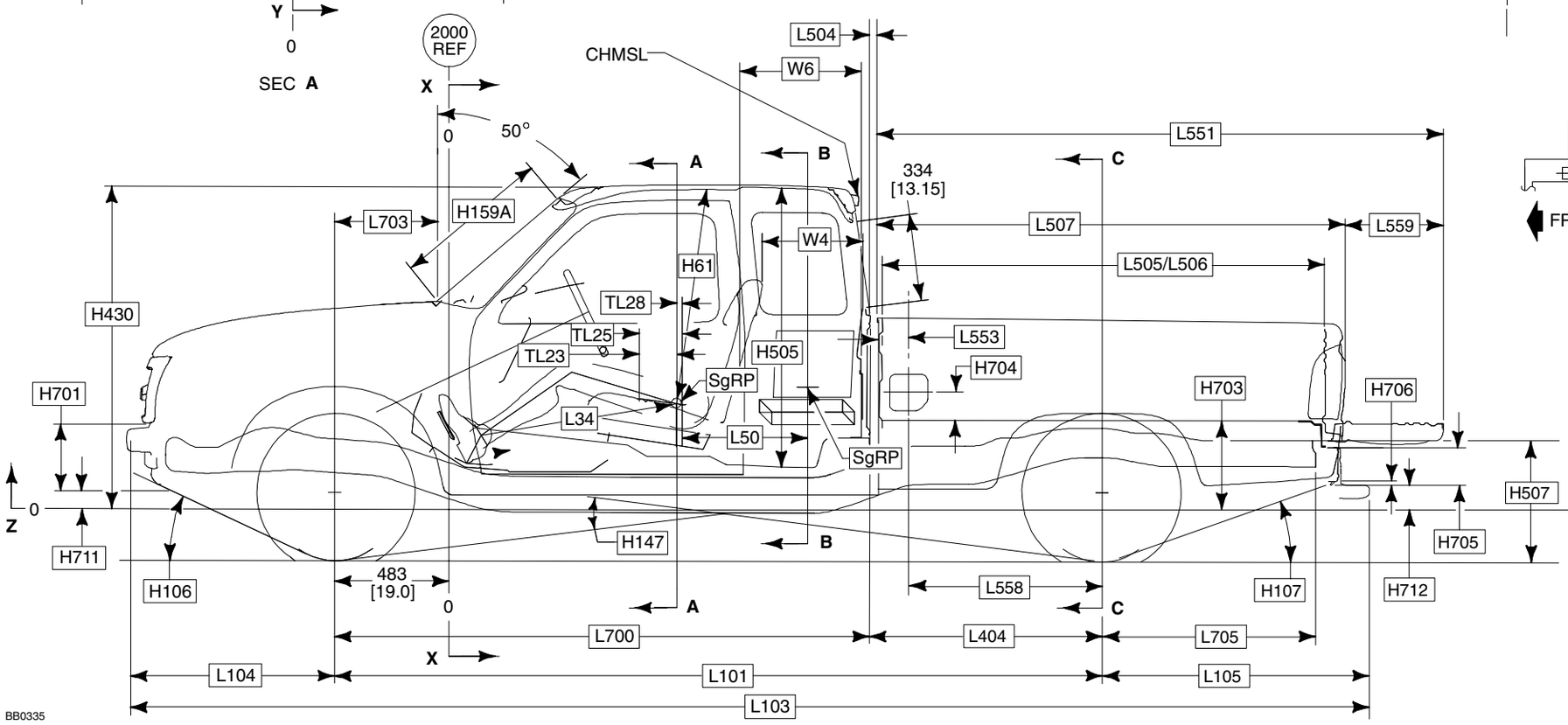

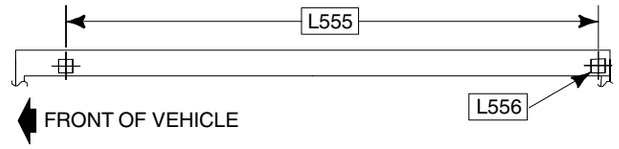

PARTIAL PLAN VIEW OF PICKUP BOX

NOTES — [ ] DIMENSIONS ARE INCHES.
— **CH, LH, F, R, FW, RW**, DIMENSIONS, PAGE 74.
— TIRE DATA, PAGE 75.
— SgRP X AND Z LOCATIONS, PAGE 29.
— X AND Z DATUM LINE LOCATIONS, PAGE 76.

DIMENSIONAL DATA
RANGER SUPERCAB STYLESIDE 4X2/4X4

2003
MODEL YEAR

CHASSIS

CODE	DESCRIPTION	4X2	4X4
H106C	ANGLE OF APPROACH	23.7°	25.8°
H107C	ANGLE OF DEPARTURE	24.6°	29.3°
H147	RAMP BREAKOVER ANGLE	18.7°	19.4°
H507	TOP OF FRAME TO GROUND	843 [33.2]	892 [35.1]
L101	WHEELBASE	3192 [125.7]	3197 [125.9]
L103	OVERALL LENGTH	5124 [201.7]	5123 [201.7]
L104	FRONT OVERHANG	845 [33.3]	845 [33.3]
L105	REAR OVERHANG	1086 [42.7]	1080 [42.5]
L404	CAB TO ℄ OF REAR AXLE	958 [37.7]	960 [37.8]
L700	℄ OF FRONT AXLE TO BACK OF CAB	2235 [88.0]	2235 [88.0]
L705	℄ REAR AXLE TO END OF FRAME	894 [35.2]	894 [35.2]
W703	FRAME RAIL WIDTH	63 [2.5]	63 [2.5]
W704	WIDTH — REAR FRAMES	834 [32.8]	834 [32.8]

PICKUP BODY

CODE	DESCRIPTION	6 FT.	
	NOMINAL CARGO BODY SIZE	4X2	4X4
H503	CARGO BODY HEIGHT	418 [16.4]	418 [16.4]
H504	WHEELHOUSE HEIGHT	227 [8.9]	227 [8.9]
H703	Z DATUM LINE TO CARGO BODY FLOOR	378 [14.9]	434 [17.1]
H704	TOP OF FLOOR TO ℄ OF FUEL FILLER	132 [5.2]	132 [5.2]
H705	REAR BUMPER HEIGHT	178 [7.0]	178 [7.0]
H706	BOTTOM OF REAR BUMPER TO TOP OF HITCH PLATE	43 [1.7]	43 [1.7]
H712	Z DATUM LINE TO BOTTOM OF REAR BUMPER	89 [3.5]	124 [4.9]
—	REAR BUMPER WIDTH (NOT SHOWN)	1628 [64.1]	1628 [64.1]
H769	TOP OF FLOOR TO TOP OF CAB @ ℄ REAR WHEELS	978 [38.5]	978 [38.5]
L504	CAB TO PICKUP BODY	26 [1.1]	26 [1.1]
L505	CARGO BODY LENGTH @ FLOOR	1833 [72.2]	1833 [72.2]
L506	CARGO BODY LENGTH @ BELT	1829 [72.0]	1829 [72.0]
L507	CARGO BODY OVERALL LENGTH	1942 [76.4]	1942 [76.4]
L551	OVERALL LENGTH TO OPEN TAILGATE	2351 [92.5]	2351 [92.5]
L553	FRONT OF BOX TO ℄ STAKE #1	180 [7.1]	180 [7.1]
L555	℄ STAKE #1 TO ℄ STAKE #2	1925 [75.8]	1925 [75.8]
L556	STAKE POCKET SIZE	52 X 40 [2 X 1.6]	52 X 40 [2 X 1.6]
L558	℄ REAR AXLE TO ℄ FUEL FILLER	775 [30.5]	777 [30.6]
L559	OPEN TAILGATE	409 [16.1]	409 [16.1]
W201	CARGO WIDTH BETWEEN WHEELHOUSE	1026 [40.4]	1026 [40.4]
W203	REAR OPENING WIDTH AT FLOOR	1320 [52.0]	1320 [52.0]
W204	TAILGATE OPENING AT BELT	1379 [54.3]	1379 [54.3]
W501	CARGO BODY WIDTH AT BELT	1377 [54.2]	1377 [54.2]
W502	MAX. INSIDE BOX	1382 [54.4]	1382 [54.4]
V5	CARGO VOLUME — LITERS/CU.FT.	1057.6 37.3	1057.6 37.3

CAB

CODE	DESCRIPTION	4X2	4X4
H61	EFFECTIVE HEADROOM — FRONT (WITH HEADLINER)	999 [39.3]	999 [39.3]
H63	EFFECTIVE HEADROOM — REAR SIDE FACING	845 [33.3]	845 [33.3]
H159A	WINDSHIELD HEIGHT	673 [26.5]	673 [26.5]
H430	Z DATUM LINE TO TOP OF CAB	1311 [51.6]	1354 [53.3]
H505	INTERIOR CARGO HEIGHT — MAX.	1095 [43.1]	1095 [43.1]
H701	FRONT BUMPER HEIGHT *	358 [14.1]	302 [11.9]
H711	Z DATUM LINE TO BOTTOM OF FRONT BUMPER *	–53 [–2.1]	43 [1.7]
TL23	SEAT TRACK TRAVEL	209 [8.2]	209 [8.2]
TL25	TRUE TRACK TRAVEL LENGTH	247 [9.7]	247 [9.7]
TL28	TRUE TRACK TRAVEL LENGTH REAR OF SgRP BENCH SEAT	38 [1.5]	38 [1.5]
L34	MAXIMUM EFFECTIVE LEG ROOM — FRONT	1077 [42.4]	1077 [42.4]
L50	H POINT COUPLE DISTANCE	543 [21.3]	543 [21.3]
L51	EFFECTIVE LEG ROOM — REAR	1026 [40.4]	1026 [40.4]
L703	℄ FRONT AXLE TO COWL POINT	442 [17.4]	442 [17.4]
W3	SHOULDER ROOM — FRONT	1367 [53.8]	1367 [53.8]
W4	SHOULDER ROOM — REAR SIDE FACING	383 [15.0]	383 [15.0]
W5	HIP ROOM — FRONT	1338 [52.7]	1338 [52.7]
W6	HIP ROOM — REAR SIDE FACING	497 [19.6]	497 [19.6]
W20	SgRP (Y)	–365 [–14.4]	–365 [–14.4]
W103	VEHICLE WIDTH	1785 [70.3]	1785 [70.3]
W106	FRONT FENDER WIDTH	1756 [69.1]	1768 [69.6]
W410	OVERALL WIDTH WITH STANDARD MIRRORS	1954 [76.9]	1954 [76.9]
W702	FRONT BUMPER WIDTH	1687 [66.4]	1687 [66.4]

* Includes lower valance panel.

NOTES — [ ] DIMENSIONS ARE INCHES.
— DIMENSIONS ARE AT CURB HEIGHTS.

DIMENSIONAL DATA
RANGER REGULAR/SUPER CAB
FLARESIDE 4X2/4X4

2003
MODEL YEAR

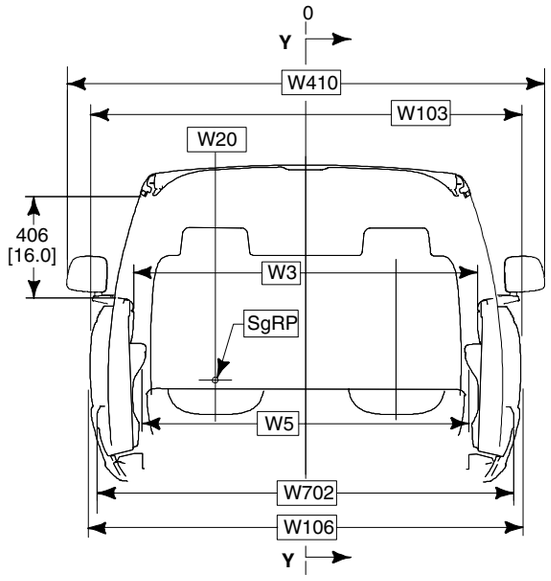

SEC **A**
REGULAR/SUPERCAB

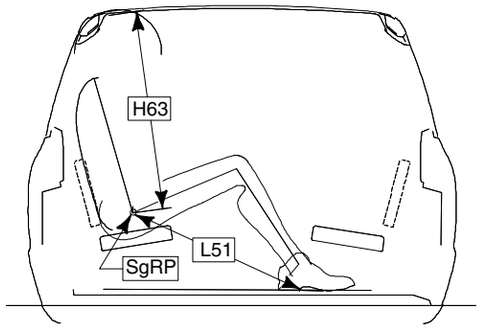

SEC **B**
(SIDE VIEW, SEE PREVIOUS ILLUSTRATION PAGE)

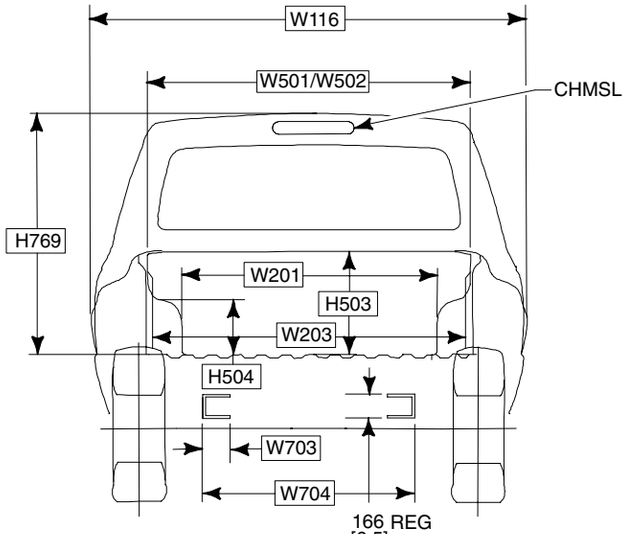

166 REG
[6.5]
193 SUPERCAB
[7.6]

SEC **C**

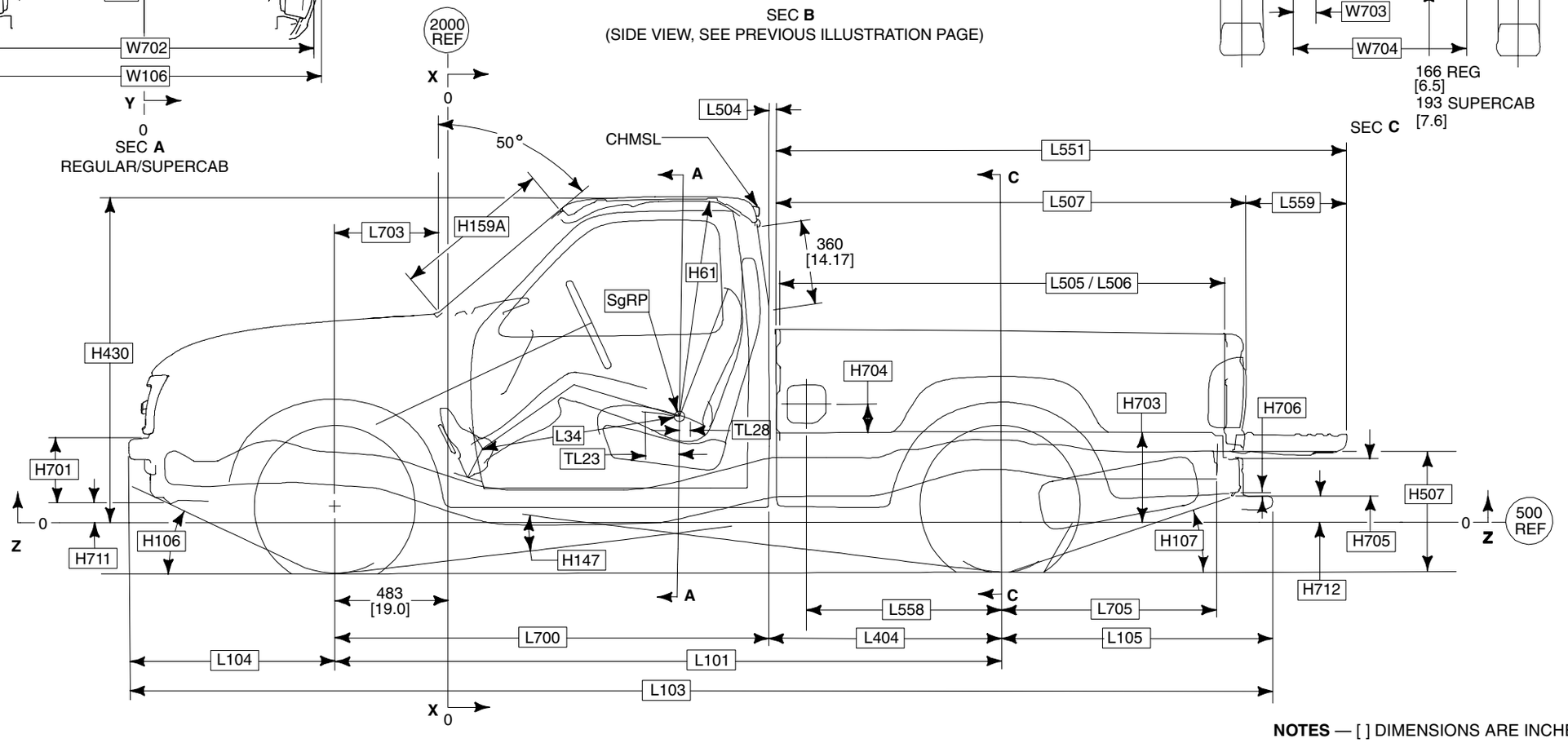

BB0336

NOTES — [ ] DIMENSIONS ARE INCHES.
— **CH, LH, F, R, FW, RW**, DIMENSIONS, PAGE 74.
— TIRE DATA, PAGE 75.
— FIDUCIAL DATA, PAGE 68.
— SgRP X AND Z LOCATIONS, PAGE 29.
— X AND Z DATUM LINE LOCATIONS, PAGE 76.
— FLARESIDE BOX DOES NOT HAVE STAKE POCKETS.

DIMENSIONAL DATA
RANGER REGULAR/SUPERCAB FLARESIDE 4X2/4X4

2003
MODEL YEAR

CHASSIS

CODE	DESCRIPTION	REGULAR CAB		SUPERCAB	
		4X2	4X4	4X2	4X4
H106C	ANGLE OF APPROACH	23.3°	23.7°	23.7°	25.8°
H107C	ANGLE OF DEPARTURE	25.4°	28.5°	24.6°	29.3°
H147	RAMP BREAKOVER ANGLE	21.6°	20.9°	18.7°	19.4°
H507	TOP OF FRAME TO GROUND	843 [33.2]	892 [35.1]	843 [33.2]	892 [35.1]
L101	WHEELBASE	2831 [111.4]	2836 [111.6]	3192 [125.7]	3197 [125.9]
L103	OVERALL LENGTH	4792 [188.6]	4792 [188.6]	5153 [202.9]	5153 [202.9]
L104	FRONT OVERHANG	845 [33.3]	845 [33.3]	845 [33.2]	845 [33.2]
L105	REAR OVERHANG	1116 [43.9]	1111 [43.7]	1116 [43.9]	1111 [43.7]
L404	CAB TO ℄ OF REAR AXLE	952 [37.5]	955 [37.6]	958 [37.7]	963 [37.9]
L700	℄ OF FRONT AXLE TO END OF CAB	1880 [74.0]	1880 [74.0]	2235 [88.0]	2235 [88.0]
L705	℄ REAR AXLE TO END OF FRAME	894 [35.2]	894 [35.2]	894 [35.2]	894 [35.2]
W703	FRAME RAIL WIDTH	74 [2.9]	74 [2.9]	63 [2.5]	63 [2.5]
W704	WIDTH — REAR FRAMES	834 [32.8]	834 [32.8]	834 [32.8]	834 [32.8]

PICKUP BODY

CODE	DESCRIPTION	REGULAR CAB		SUPERCAB	
NOMINAL CARGO BODY SIZE		4X2 6 FT.	4X4 6 FT.	4X2 6 FT.	4X4 6 FT.
H503	CARGO BODY HEIGHT	424 [16.7]	424 [16.7]	424 [16.7]	424 [16.7]
H504	WHEELHOUSE HEIGHT	237 [9.3]	237 [9.3]	220 [8.7]	220 [8.7]
H703	Z DATUM LINE TO CARGO BODY FLOOR	389 [15.3]	445 [17.5]	378 [14.9]	432 [17.0]
H704	TOP OF FLOOR TO ℄ OF FUEL FILLER	132 [5.2]	132 [5.2]	132 [5.2]	132 [5.2]
H705	REAR BUMPER HEIGHT	178 [7.0]	178 [7.0]	178 [7.0]	178 [7.0]
H706	BOTTOM OF REAR BUMPER TO TOP OF HITCH PLATE	43 [1.7]	43 [1.7]	43 [1.7]	43 [1.7]
H712	Z DATUM LINE TO BOTTOM OF REAR BUMPER	97 [3.8]	152 [6.0]	86 [3.4]	142 [5.6]
H769	TOP OF FLOOR TO TOP OF CAB @ ℄ REAR WHEELS	975 [38.4]	975 [38.4]	978 [38.5]	978 [38.5]
L504	CAB TO PICKUP BODY	21 [0.8]	21 [0.8]	28 [1.1]	28 [1.1]
L505	CARGO BODY LENGTH @ FLOOR	1834 [72.2]	1834 [72.2]	1834 [72.2]	1834 [72.2]
L506	CARGO BODY LENGTH @ BELT	1817 [71.5]	1817 [71.5]	1817 [71.5]	1817 [71.5]
L507	CARGO BODY OVERALL LENGTH	1943 [76.5]	1943 [76.5]	1943 [76.5]	1943 [76.5]
L551	OVERALL LENGTH TO OPEN TAILGATE	2351 [92.5]	2351 [92.5]	2351 [92.5]	2351 [92.5]
L558	℄ REAR AXLE TO ℄ FUEL FILLER	775 [30.5]	777 [30.6]	775 [30.5]	777 [30.6]
L559	OPEN TAILGATE	409 [16.1]	409 [16.1]	409 [16.1]	409 [16.1]
W116	MAXIMUM OUTSIDE FENDER	1763 [69.4]	1763 [69.4]	1763 [69.4]	1763 [69.4]
W201	CARGO WIDTH BETWEEN WHEELHOUSE	1026 [40.4]	1026 [40.4]	1026 [40.4]	1026 [40.4]
W203	REAR OPENING WIDTH AT FLOOR	1114 [43.8]	1114 [43.8]	1114 [43.8]	1114 [43.8]
W501	CARGO BODY WIDTH AT BELT	1164 [45.8]	1164 [45.8]]	1164 [45.8]	1164 [45.8]
W502	MAXIMUM INSIDE BOX	1273 [50.1]	1273 [50.1]	1273 [50.1]	1273 [50.1]
V5	CARGO VOLUME — LITERS/ CU.FT.	911.1 35.8	911.1 35.8	911.3 35.8	911.3 35.8

CAB

CODE	DESCRIPTION	REGULAR CAB		SUPERCAB	
		4X2	4X4	4X2	4X4
H61	EFFECTIVE HEADROOM WITH HEADLINER	999 [39.3]	999 [39.3]	999 [39.3]	999 [39.3]
H63	EFFECTIVE HEADROOM — REAR SIDE FACING	—	—	845 [33.3]	845 [33.3]
H159A	WINDSHIELD HEIGHT	673 [26.5]	673 [26.5]	673 [26.5]	673 [26.5]
H430	Z DATUM LINE TO TOP OF CAB	1290 [50.8]	1351 [53.2]	1293 [50.9]	1354 [53.3]
H505	INTERIOR CARGO HEIGHT — MAX. (NOT SHOWN)	—	—	1113 [43.8]	1113 [43.8]
H701	FRONT BUMPER HEIGHT *	358 [14.1]	277 [10.9]	358 [14.1]	302 [11.9]
H711	Z DATUM LINE TO BOTTOM OF FRONT BUMPER *	–18 [–0.7]	43 [1.7]	–71 [–2.8]	43 [1.7]
TL23	SEAT TRACK TRAVEL	200 [7.8]	200 [7.8]	209 [8.2]	209 [8.2]
TL28	TRUE TRACK TRAVEL LENGTH REAR OF SgRP — BENCH SEAT	28 [0.1]	28 [0.1]	38 [1.5]	38 [1.5]
L34	MAXIMUM EFFECTIVE LEG ROOM	1077 [42.4]	1077 [42.4]	1077 [42.4]	1077 [42.4]
L50	H POINT COUPLE DISTANCE (NOT SHOWN)	—	—	543 [21.4]	543 [21.4]
L51	EFFECTIVE LEG ROOM — REAR	—	—	1026 [40.4]	1026 [40.4]
L703	℄ FRONT AXLE TO COWL POINT	442 [17.4]	442 [17.4]	442 [17.4]	442 [17.4]
W3	SHOULDER ROOM — FRONT	1367 [53.8]	1367 [53.8]	1367 [53.8]	1367 [53.8]
W4	SHOULDER ROOM — REAR SIDE FACING (NOT SHOWN)	—	—	362 [14.2]	383 [15.0]
W5	HIP ROOM	1338 [52.7]	1338 [52.7]	1338 [52.7]	1338 [52.7]
W6	HIP ROOM — REAR SIDE FACING (NOT SHOWN)	—	—	497 [19.6]	497 [19.6]
W20	SgRP (Y)	–365 [–14.4]	–365 [–14.4]	–365 [–14.4]	–365 [–14.4]
W103	VEHICLE WIDTH	1763 [69.4]	1788 [70.4]	1763 [69.4]	1788 [70.4]
W106	FRONT FENDER WIDTH	1755 [69.1]	1755 [69.1]	1755 [69.1]	1755 [69.1]
W410	OVERALL WIDTH WITH STANDARD MIRRORS	1954 [76.9]	2047 [80.6]	2047 [80.6]	2047 [80.6]
W702	FRONT BUMPER WIDTH	1687 [66.4]	1687 [66.4]	1687 [66.4]	1687 [66.4]

* Includes lower valance panel.

NOTES — [ ] DIMENSIONS ARE INCHES.
— DIMENSIONS ARE AT CURB HEIGHTS.

RANGER AXLE/TIRE/VEHICLE HEIGHT DATA

2003
MODEL YEAR

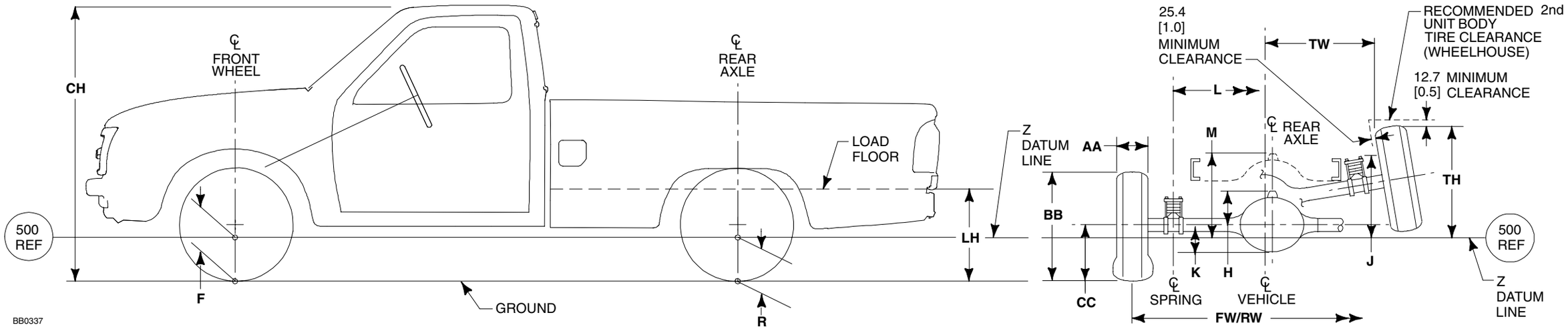

Model	WB [in]	GVWR	Base Tire	F Height @ Front Wheel 1/		R Height @ Rear Axle 1/		LH1/		CH1/		H2/3/	J	K4/	L	M2/3/	CC5/	FW At Base Curb Weight	RW	TW	TH
				Height at Base Curb Weight	Loaded Height @ Spring Rating	Height at Base Curb Weight	Loaded Height @ Spring Rating	Empty	Loaded	Empty	Loaded										
Regular Cab Styleside 4x2	112	4360 4680	P225/70R-15SL	269 [10.6]	234 [9.2]	326 [12.8]	217 [8.5]	724 [28.5]	586 [23.1]	1650 [64.9]	1575 [62.0]	157 [6.2]	338 [13.3]	130 [5.10]	986 [38.8]	335 [13.2]	300 [11.8]	1488 [58.6]	1455 [57.3]	559 [22.0] 546 [21.5]	411 [16.2]
	118	4360 4700	P225/70R-15SL	269 [10.6]	234 [9.2]	323 [12.7]	217 [8.5]	714 [28.1]	572 [22.5]	1649 [64.9]	1575 [62.0]	157 [6.2]	338 [13.3]	130 [5.10]	986 [38.8]	335 [13.2]	300 [11.8]	1488 [58.6]	1455 [57.3]	559 [22.0] 546 [21.5]	411 [16.2]
SuperCab Styleside 4x2	126	4740 5020	P225/70R-15SL	268 [10.5]	234 [9.2]	314 [12.4]	217 [8.5]	708 [27.9]	587 [23.1]	1645 [64.8]	1577 [62.0]	157 [6.2]	338 [13.3]	130 [5.10]	986 [38.8]	335 [13.2]	300 [11.8]	1488 [58.6]	1455 [57.3]	559 [22.0] 546 [21.5]	411 [16.2]
Regular Cab Styleside 4x4	112	4740 5020	P235/75R-15	351 [13.8]	310 [12.2]	415 [16.3]	316 [12.4]	804 [31.6]	692 [27.2]	1724 [67.9]	1663 [65.4]	157 [6.2]	302 [11.9]	130 [5.10]	986 [38.8]	249 [9.8]	328 [12.9]	1488 [58.6]	1455 [57.3]	569 [22.4]	348 [13.7]
	118	4800 5040		350 [13.8]	310 [12.2]	413 [16.3]	316 [12.4]	804 [31.6]	692 [27.2]	1726 [67.9]	1662 [65.4]	157 [6.2]	302 [11.9]	130 [5.10]	986 [38.8]	249 [9.8]	328 [12.9]	1488 [58.6]	1455 [57.3]	569 [22.4]	419 [16.5]
SuperCab Styleside 4x4	126	5120 5300	P235/75R-15	349 [13.7]	310 [12.2]	403 [15.9]	316 [12.4]	795 [31.3]	692 [27.2]	1723 [67.8]	1664 [65.5]	157 [6.2]	302 [11.9]	130 [5.10]	986 [38.8]	249 [9.8]	328 [12.9]	1488 [58.6]	1455 [57.3]	569 [22.4]	374 [14.7]

1/ — The Height Data shown represents dimensions of a base/standard vehicle with no options. Actual height may vary due to production tolerances.
2/ — Add 0.5" on vehicles equipped with 4.0L engine.
3/ — To top of brake tube union.
4/ — 5.7" on vehicles equipped with 4.0L engine.
5/ — Minimum loaded radius.

NOTES — [ ] DIMENSIONS ARE INCHES.
— VEHICLE RIDE HEIGHTS ARE GIVEN AT TIRE MINIMUM LOAD RADIUS.
— TIRE DATA ON PAGE 75.

RANGER TIRE DATA

ALL-SEASON TIRE DATA				
Tire Size	**Rim Width**	**AA Maximum Section Width**	**BB Maximum Diameter**	***CC Minimum Loaded Radius**
P225/70R-15SL	178 [7.0]	241 [9.5]	702 [27.6]	315 [12.4]
ALL-TERRAIN TIRE DATA				
P235/75R-15SL(1)	178 [7.0]	245 [9.6]	744 [29.3]	328 [12.9]
P245/75R-16SL(2)	178 [7.0]	261 [10.3]	783 [30.8]	345 [13.6]
31x10.50R-15SL(3)	178 [7.0]	259 [10.2]	783 [30.8]	345 [13.6]

* This number represents Radius – Axle centerline to ground with maximum rated load on tire at maximum pressure.

(1) Available XL 4x4, Edge 4x2 and XLT 4x2.

(2) Available XLT 4x4 and Edge 4x4.

(3) Available FX4/Level II 4x4 only.

NOTE — [ ] DIMENSIONS ARE INCHES.

RANGER X AND Z DATUM LINE LOCATION

2003
MODEL YEAR

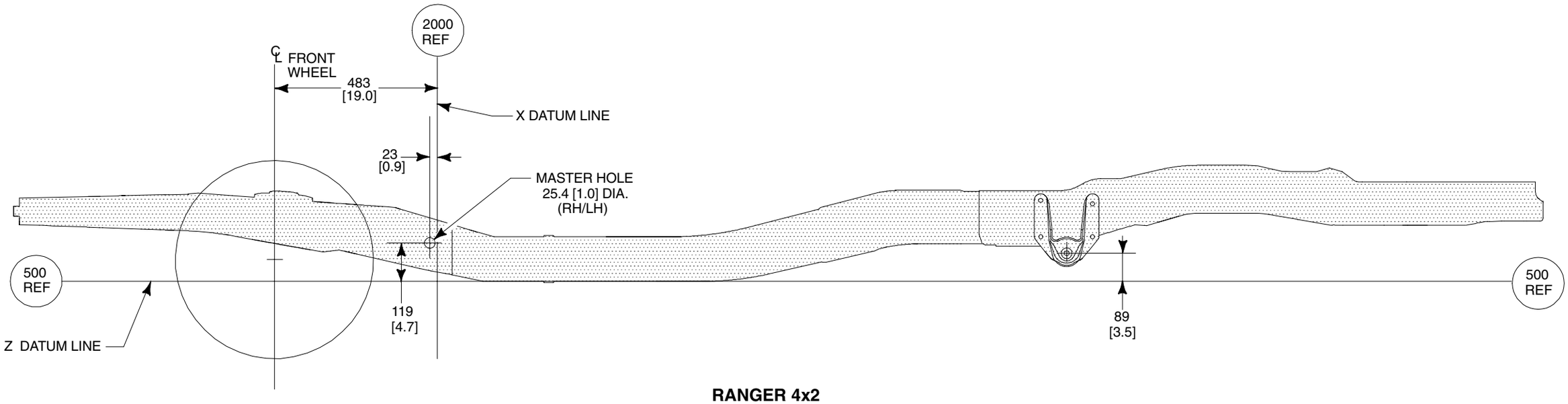

RANGER 4x2

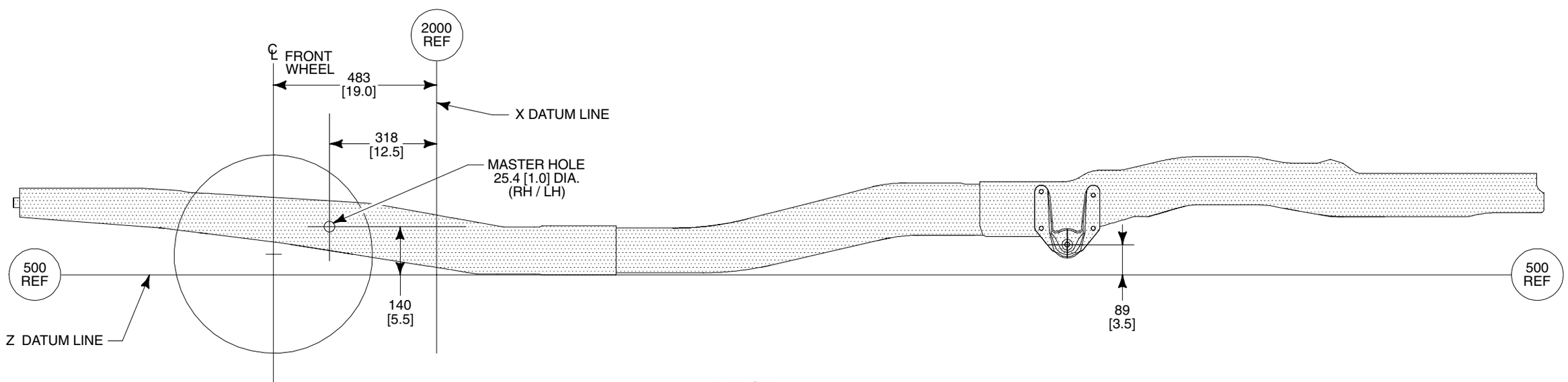

RANGER 4x4

BB0340

NOTE — [ ] DIMENSIONS ARE INCHES.

FUEL AND VAPOR SYSTEM
TYPICAL FOR ALL LENGTHS OF RANGER

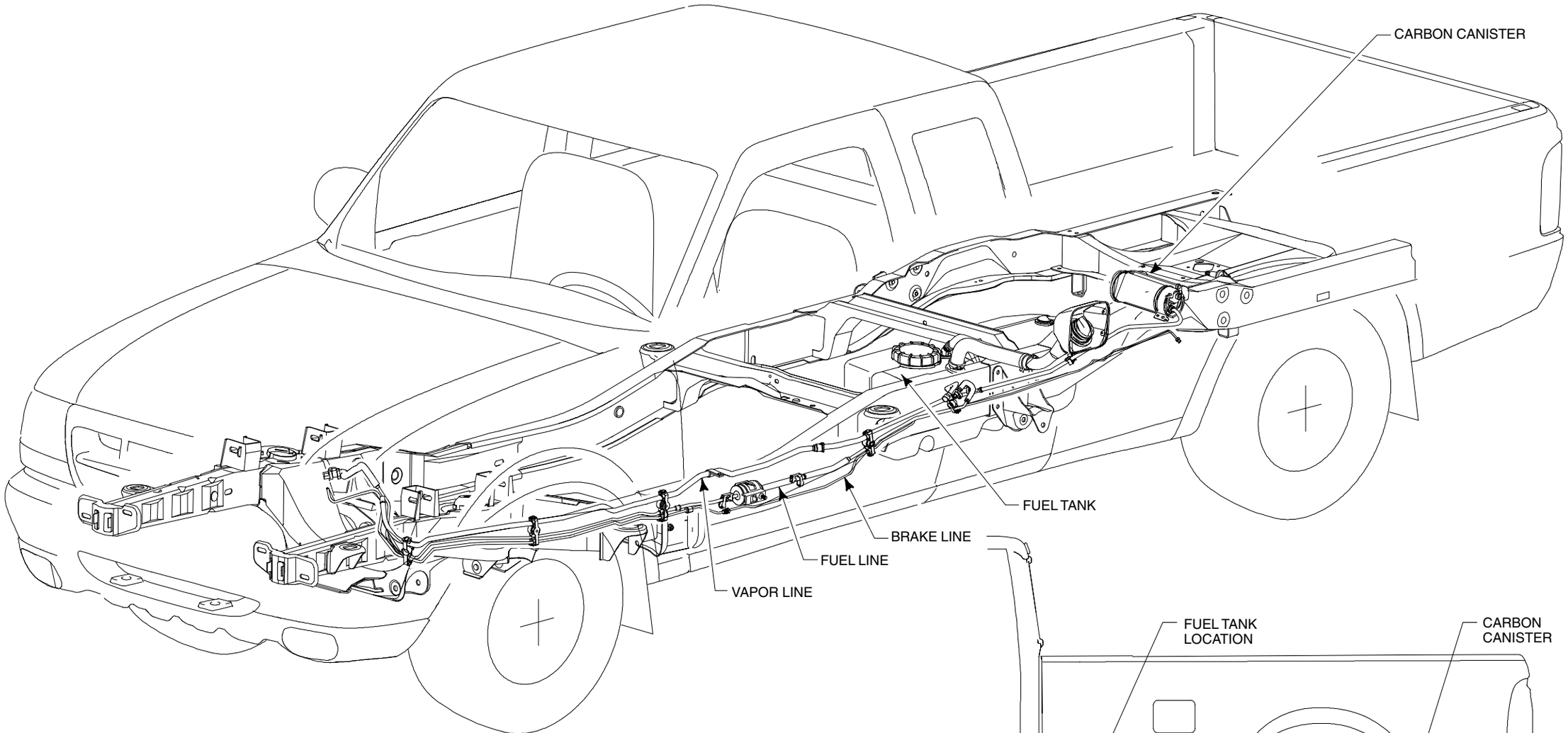

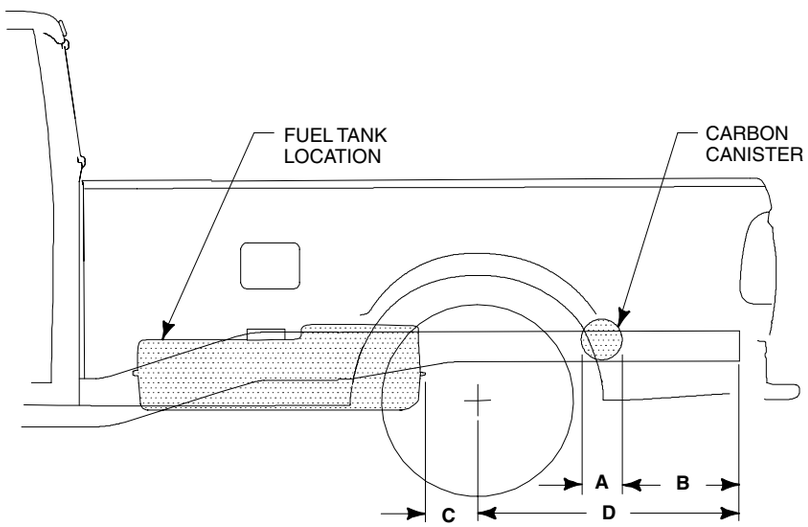

			DIMENSIONS			
CAB STYLE	WHEELBASE INCHES	TANK	A	B	C	D
REGULAR CAB STYLESIDE/FLARESIDE	[112]	STANDARD	126 [5.0]	537 [21.4]	185.7 [7.3]	897 [35.3]
REGULAR CAB STYLESIDE	[118]	STANDARD	126 [5.0]	689.9 [27.2]	185.7 [7.3]	1050 [41.3]
SUPERCAB STYLESIDE/FLARESIDE	[126]	STANDARD	126 [5.0]	536.2 [21.1]	181.9 [7.2]	897 [35.3]

NOTE — [ ] DIMENSIONS ARE INCHES.

DIMENSIONAL DATA
WINDSTAR 7-PASSENGER WAGON

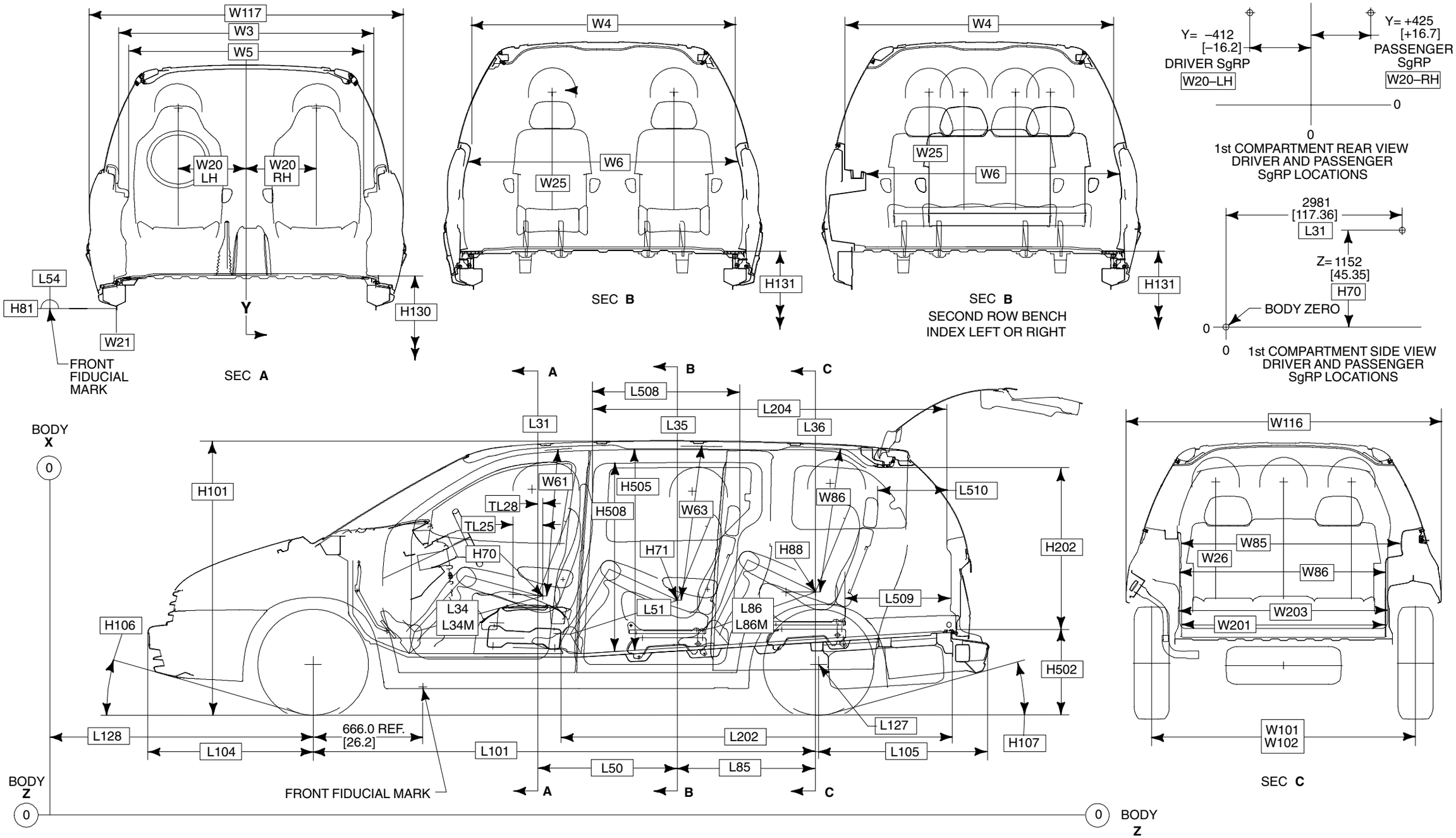

NOTE — [ ] DIMENSIONS ARE INCHES.

DIMENSIONAL DATA
WINDSTAR 7-PASSENGER WAGON

2003
MODEL YEAR

CODE	DESCRIPTION	3-DOOR	4-DOOR
EXTERIOR			
L101	WHEELBASE	3066 [120.7]	
L103	OVERALL LENGTH	5087 [200.2]	
L104	OVERHANG — FRONT	998 [39.3]	
L105	OVERHANG — REAR	1023 [40.2]	
L127	REAR WHEELS ℄ X-COORDINATE	4685 [184.5]	
L128	FRONT WHEELS ℄ X-COORDINATE	1619 [63.7]	
W101	TREAD — FRONT	1634 [64.3]	
W102	TREAD — REAR	1600 [63.0]	
W103	VEHICLE WIDTH MAXIMUM WITH MOLDINGS	1925 [75.8]	
W116	VEHICLE WIDTH — MAXIMUM	1917 [75.5]	
W117	BODY WIDTH AT DRIVER SgRP	1917 [75.5]	
H101	VEHICLE HEIGHT — CURB	1728 [68.0]	
H101	VEHICLE HEIGHT — LOADED	1665 [65.5]	
H106	ANGLE OF APPROACH	16.0°	
H107	ANGLE OF DEPARTURE	15.5°	
H130	STEP HEIGHT FRONT DOORS AT CURB	407 [16.0]	
H131	STEP HEIGHT SLIDING DOOR AT CURB	455 [17.9]	
H502	CARGO FLOOR TO GROUND AT CURB	605 [23.8]	
FRONT COMPARTMENT			
TL25	DESIGN H-POINT TRAVEL	180 [7.1]	
TL28	SEAT TRACK TRAVEL REAR OF H-POINT	30 [1.2]	
L34	MAXIMUM EFFECTIVE LEGROOM	1033 [40.7]	
L34M	MAXIMUM EFFECTIVE LEGROOM (SgRP AT REARMOST)	1061 [41.8]	
W3	SHOULDER ROOM — FRONT	1548 [60.9]	
W5	HIP ROOM — FRONT	1464 [57.6]	
H61	EFFECTIVE HEADROOM — FRONT	997 [39.3]	
REAR COMPARTMENT —CARGO			
L202	CARGO LENGTH — CLOSED LIFTGATE TO BACK OF FRONT SEAT AT FLOOR	2362 [93.0]	
L204	CARGO LENGTH AT BELT TO FRONT SEAT	2169 [85.4]	
L509	CARGO LENGTH 3RD SEAT	671 [26.4]	
L510	CARGO LENGTH @ BELT — BEHIND 3RD SEAT	467 [18.4]	
W201	CARGO WIDTH BETWEEN WHEELHOUSES	1237 [48.7]	
W500	CARGO BODY WIDTH AT FLOOR	1588 [62.5]	
H202	REAR OPENING HEIGHT	1019 [40.1]	
H505	CARGO HEIGHT — MAXIMUM	1258 [49.5]	
V6	CARGO VOLUME — CU. FT. — TOTAL	3870/136.6	3923/138.5
V9	CARGO VOLUME BEHIND 3RD SEAT — CU. FT.	854/30	854/30

CODE	DESCRIPTION	3-DOOR	4-DOOR
REAR COMPARTMENT —SEAT			
L50	SgRP COUPLE DISTANCE — FRONT SEAT TO 2ND SEAT	848 [33.4]	
L51	EFFECTIVE LEGROOM — 2ND SEAT	981 [38.6]	
L85	SgRP COUPLE DISTANCE 2ND TO 3RD SEAT	837 [33.0]	
L86	EFFECTIVE LEGROOM — 3RD SEAT	945 [37.3]	
L86M	MAXIMUM EFFECTIVE LEGROOM — 3RD SEAT (REARMOST)	945 [37.3]	
W4	SHOULDER ROOM — 2ND SEAT	1629 [64.1]	
W6	HIP ROOM — 2ND SEAT	1548 [60.9]	
W85	SHOULDER ROOM — 3RD SEAT	1333 [52.5]	
W86	HIP ROOM — 3RD SEAT	1237 [48.7]	
H63	EFFECTIVE HEADROOM — 2ND SEAT	1044 [41.1]	
H86	EFFECTIVE HEADROOM — 3RD SEAT	962 [37.9]	
DOOR OPENINGS [ENTRANCE]			
L508-R	ENTRANCE LENGTH — CARGO SIDE DOOR	714 [28.1]	
L508-L	ENTRANCE LENGTH — CARGO SIDE DOOR	—	646 [25.4]
W203	REAR OPENING WIDTH AT FLOOR	1224 [48.2]	
H508	ENTRANCE HEIGHT — CARGO SIDE DOOR	1127 [44.4]	
SEATING REFERENCE POINTS [SgRP]			
L31	SgRP FRONT LH/RH SEAT (X)	2981 [117.36]	
L35	SgRP 2ND SEAT (X)	3829 [150.75]	
L36	SgRP 3RD SEAT (X)	4666 [183.70]	
W20	SgRP FRONT SEAT LH/RH (X)	– 412 [–16.22]/425 [16.7]	
W25	SgRP 2ND SEAT LH/RH QUAD BENCH (Y)	– 308.4 [–12.1]/429.6 [16.9]	
W25	SgRP 2ND SEAT LH/RH (Y) BENCH — INDEX LEFT	– 317 [–12.5]/207 [8.2]	
W25	SgRP 2ND SEAT LH/RH (Y) BENCH — INDEX RIGHT	– 106 [–4.2]/418 [16.5]	
W26	SgRP 3RD SEAT LH/RH (Y)	– 412 [–16.2]/412 [16.2]	
H70	SgRP FRONT SEAT LH/RH (Z)	1152 [45.35]	
H71	SgRP 2ND SEAT LH/RH (Z)	1124 [44.25]	
H88	SgRP 3RD SEAT LH/RH (Z)	1173 [46.18]	
FRONT FIDUCIAL MARK			
L54	1ST X-COORDINATE	2285 [89.96]	
W21	1ST X-COORDINATE LH/RH (Y)	– 787.4 [–31.0]/787.4 [31.0]	
H81	1ST X-COORDINATE	596.5 [23.48]	

NOTE — [ ] DIMENSIONS ARE INCHES.

DIMENSIONAL DATA
WINDSTAR CARGO VAN

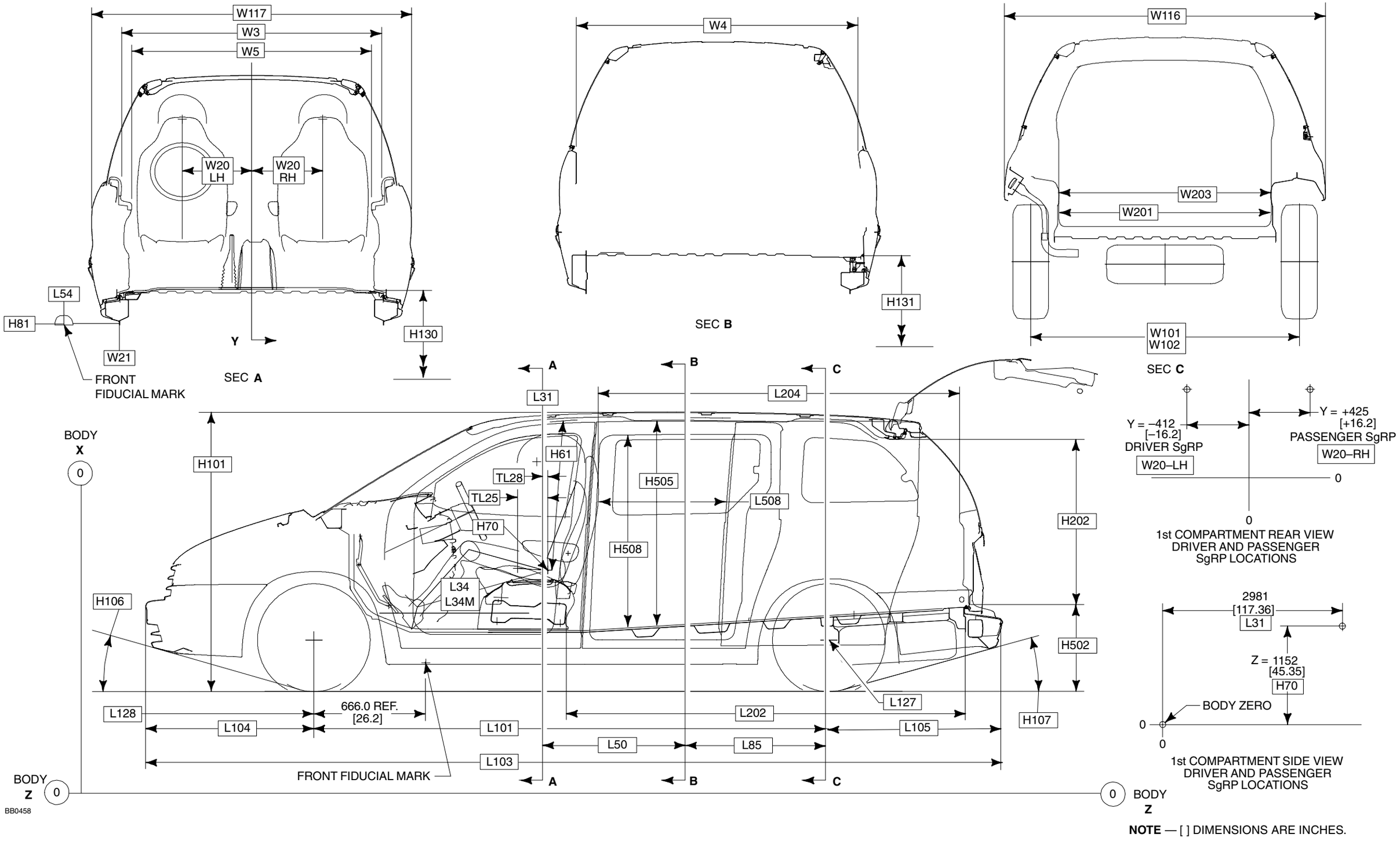

NOTE — [ ] DIMENSIONS ARE INCHES.

DIMENSIONAL DATA
WINDSTAR CARGO VAN

CODE	DESCRIPTION	CARGO
EXTERIOR		
L101	WHEELBASE	3066 [120.7]
L103	OVERALL LENGTH	5087 [200.2]
L104	OVERHANG — FRONT	998 [39.3]
L105	OVERHANG — REAR	1023 [40.2]
L127	REAR WHEELS ℄ X-COORDINATE	4685 [184.5]
L128	FRONT WHEELS ℄ X-COORDINATE	1619 [63.7]
W101	TREAD — FRONT	1634 [64.3]
W102	TREAD — REAR	1600 [63.0]
W103	VEHICLE WIDTH MAXIMUM WITH MOLDINGS	1925 [75.8]
W116	VEHICLE WIDTH	1917 [75.5]
W117	BODY WIDTH AT DRIVER SgRP	1888 [74.3]
H101	VEHICLE HEIGHT — CURB	1728 [68.0]
H101	VEHICLE HEIGHT — LOADED	1665 [65.6]
H106	ANGLE OF APPROACH	16.0°
H107	ANGLE OF DEPARTURE	15.5°
H130	STEP HEIGHT FRONT DOORS AT CURB	407 [16.0]
H131	STEP HEIGHT SLIDING DOOR AT CURB	455 [17.9]
H502	CARGO FLOOR TO GROUND AT CURB	605 [23.8]
FRONT COMPARTMENT		
TL25	DESIGN H-POINT TRAVEL	180 [7.1]
TL28	SEAT TRACK TRAVEL REAR OF H-POINT	30 [1.2]
L34	MAXIMUM EFFECTIVE LEGROOM	1033 [40.7]
L34M	MAXIMUM EFFECTIVE LEGROOM (SgRP AT REARMOST)	1061 [41.8]
W3	SHOULDER ROOM — FRONT	1548 [60.9]
W5	HIP ROOM — FRONT	1464 [57.6]
H61	EFFECTIVE HEADROOM — FRONT	997 [39.3]

CODE	DESCRIPTION	CARGO
REAR COMPARTMENT –CARGO		
L202	CARGO LENGTH — CLOSED LIFTGATE TO BACK OF FRONT SEAT AT FLOOR	2362 [93.0]
L204	CARGO LENGTH — CLOSED LIFTGATE TO BACK OF FRONT SEAT AT BELT	2169 [85.4]
W201	CARGO WIDTH BETWEEN WHEELHOUSES	1237 [48.7]
W500	CARGO BODY WIDTH AT FLOOR	1588 [62.5]
H202	REAR OPENING HEIGHT	1019 [40.1]
H505	CARGO HEIGHT — MAXIMUM	1258 [49.5]
V6	CARGO VOLUME — CU. FT. — TOTAL	142.6
DOOR OPENINGS		
L508	ENTRANCE LENGTH — CARGO SIDE DOOR	714 [28.1]
W203	REAR OPENING WIDTH AT FLOOR	1224 [48.2]
H508	ENTRANCE HEIGHT — CARGO SIDE DOOR	1127 [44.4]
SEATING REFERENCE POINTS (SgRP)		
L31	SgRP FRONT SEAT LH/RH (X)	2981 [117.36]
W20	SgRP FRONT SEAT LH/RH (Y)	–412 [–16.2]/412 [16.2]
H70	SgRP FRONT SEAT LG/RH (Z)	1152 [45.35]
FRONT FIDUCIAL MARK		
L54	1ST X-COORDINATE	2285 [89.96]
W21	1ST Y-COORDINATE LH/RH	–787.4 [–31.0]/787.4 [31.0]
H81	1ST Z-COORDINATE	596.5 [23.48]

NOTE — [ ] DIMENSIONS ARE INCHES.

DIMENSIONAL DATA
WINDSTAR WAGON/VAN

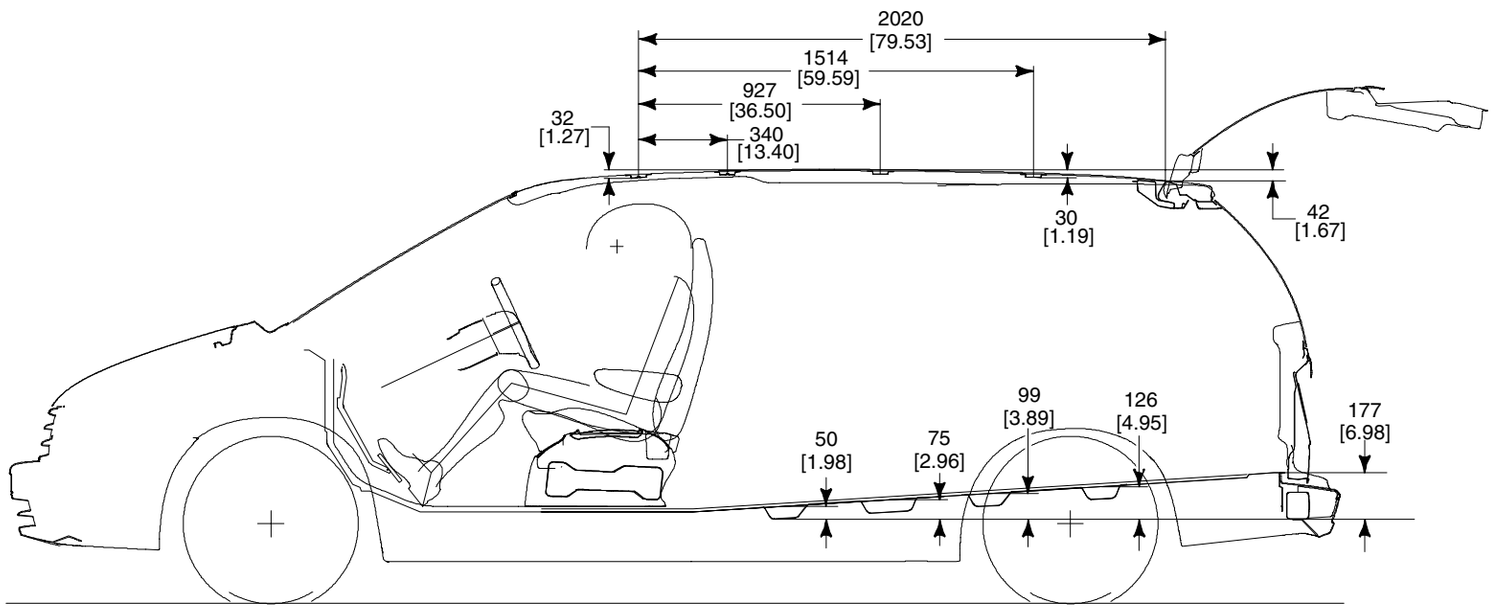

PLAN VIEW OF REAR FLOOR CARGO VAN

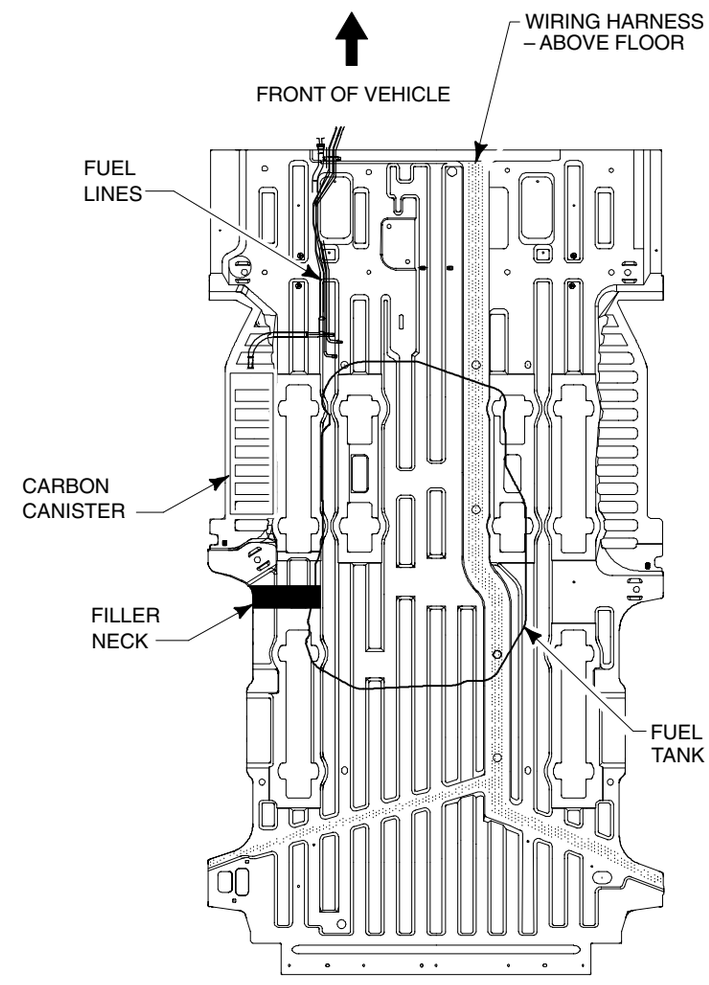

CAUTION – WHEN DRILLING THE FLOOR, UNDERSTAND THE LOCATION OF COMPONENTS BELOW FLOOR AND DO NOT DRILL IN AREAS IDENTIFIED IN THE ILLUSTRATION ABOVE .

NOTE — [ ] DIMENSIONS ARE INCHES.

DIMENSIONAL DATA
WINDSTAR WAGON/VAN

PLAN VIEW OF REAR FLOOR
PASSENGER VAN

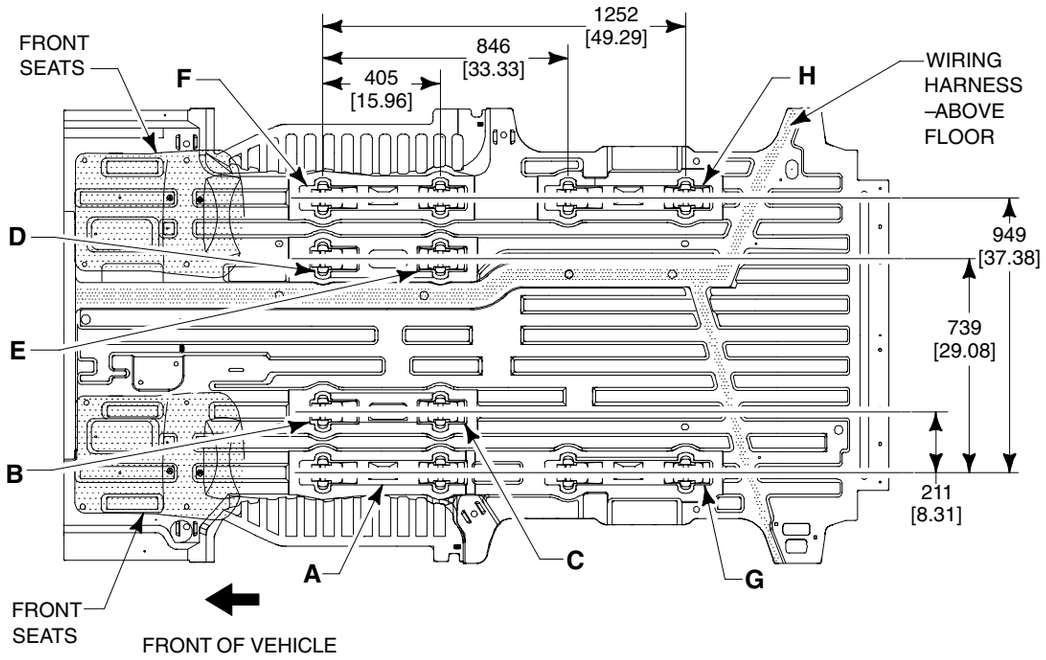

SEAT ANCHORAGE POCKET LOCATIONS

SEATING CONFIGURATION/LOCATIONS	
A, D, & E :	2ND ROW BENCH INDEXED LEFT
B, C, & F :	2ND ROW BENCH INDEXED RIGHT
A, B, & C :	2ND ROW DRIVER SIDE BUCKET
D, E, & F :	2ND ROW PASSENGER SIDE BUCKET
A & F :	3RD ROW BENCH IN 2ND ROW POSITION
G & H :	3RD ROW BENCH

NOTE — [ ] DIMENSIONS ARE INCHES.

DIMENSIONAL DATA
E-150/350 SUPER DUTY WAGON 8/12-PASSENGER

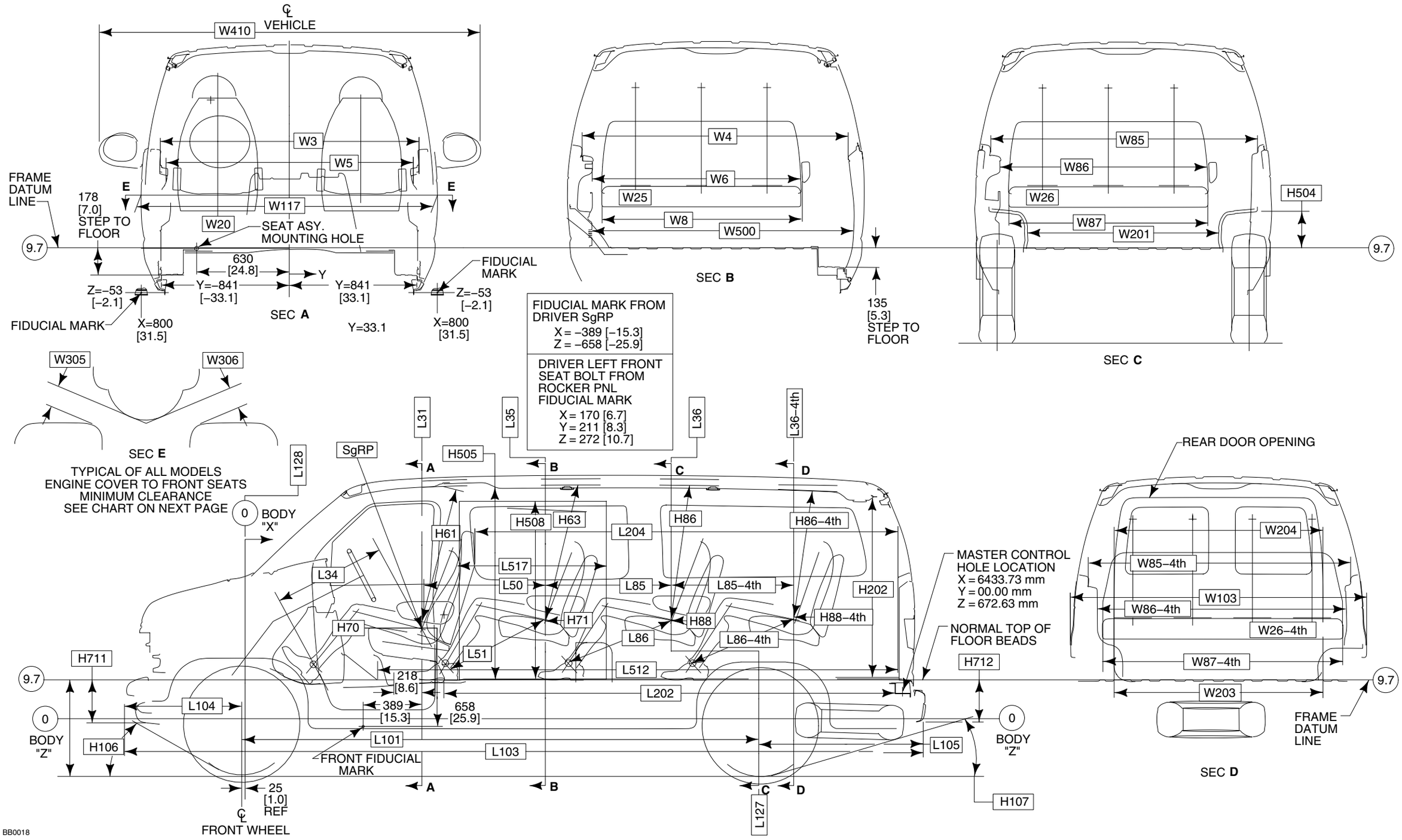

NOTES — [ ] DIMENSIONS ARE INCHES.
— **CH, LH, F, R, FW** AND **RW**, PAGE 94.
— SEAT TRACK TRAVEL, PAGE 30.

DIMENSIONAL DATA
E-150/350 SUPER DUTY WAGON 8/12-PASSENGER

CODE	DESCRIPTION	BASE BUCKET 8-PASS CARGO DOOR	BASE BUCKET 12-PASS SLIDING DOOR	CAPTAIN'S CHAIR 8-PASS SLIDING DOOR	CAPTAIN'S CHAIR 12-PASS SLIDING DOOR
EXTERIOR					
H106	ANGLE OF APPROACH	24.9°	29.2°	24.9°	29.2°
H107	ANGLE OF DEPARTURE	13.2°	14.3°	13.2°	14.3°
H711	FRAME DATUM LINE TO BOTTOM OF FRONT BUMPER	206 [8.1]	206 [8.1]	206 [8.1]	206 [8.1]
H712	FRAME DATUM LINE TO BOTTOM OF REAR BUMPER	256 [10.1]	256 [10.1]	256 [10.1]	256 [10.1]
L101	WHEELBASE	3505 [138.0]	3505 [138.0]	3505 [138.0]	3505 [138.0]
L103	OVERALL LENGTH	5381 [211.8]	5381 [211.8]	5381 [211.8]	5381 [211.8]
L104	OVERHANG — FRONT	762 [30.0]	762 [30.0]	762 [30.0]	762 [30.0]
L105	OVERHANG — REAR	1114 [43.8]	1114 [43.8]	1114 [43.8]	1114 [43.8]
L127	REAR WHEEL ℄ X-COORDINATE	3479 [137.0]	3480 [137.0]	3479 [137.0]	3480 [137.0]
L128	FRONT WHEEL ℄ X-COORDINATE	-25 [-1.0]	-25 [-1.0]	-25 [-1.0]	-25 [-1.0]
W103	VEHICLE WIDTH	2014 [79.3]	2014 [79.3]	2014 [79.3]	2014 [79.3]
W117	BODY WIDTH AT H-POINT	1998 [78.7]	1998 [78.7]	1998 [78.7]	1998 [78.7]
W410	RECREATIONAL MIRROR	2590 [102.0]	2590 [102.0]	2590 [102.0]	2590 [102.0]
	SAIL MOUNT — MANUAL/POWER MIRROR	2434 [93.9]	2434 [93.9]	2434 [93.9]	2434 [93.9]
	TRAILER TOW MIRROR / EXTENDED (E550)	2605 [102.5]/ 2753 [108.4]	2605 [102.5]/ 2753 [108.4]	2605 [102.5]/ 2753 [108.4]	2605 [102.5]/ 2753 [108.4]
FRONT COMPARTMENT					
H61	EFFECTIVE HEAD ROOM — FRONT	1069[42.1]	1069[42.1]	1069 [42.1]	1069 [42.1]
H70	SgRP FRONT LEFT/RIGHT (Z)	604 [23.8]/ 597 [23.5]	604 [23.8]/ 597 [23.5]	604 [23.8]/ 597 [23.5]	604 [23.8]/ 597 [23.5]
L31	SgRP FRONT LEFT/RIGHT (X)	1188 [46.8]/ 1211 [47.7]	1188 [46.8]/ 1211 [47.7]	1188 [46.8]/ 1211 [47.7]	1188 [46.8]/ 1211 [47.7]
L34	MAXIMUM EFFECTIVE LEG ROOM	1015 [40.0]	1015 [40.0]	1015 [40.0]	1015 [40.0]
W3	SHOULDER ROOM — FRONT	1728 [68.0]	1728 [68.0]	1728 [68.0]	1728 [68.0]
W5	HIP ROOM — FRONT	1670 [65.7]	1670 [65.7]	1670 [65.7]	1670 [65.7]
W20	SgRP FRONT LEFT/RIGHT (Y)	-518 [-20.4]/ 518 [20.4]	-518 [-20.4]/ 518 [20.4]	-518 [-20.4]/ 518 [20.4]	-518 [-20.4]/ 518 [20.4]
W305	SEAT TO ENGINE COVER — DRIVER	186 [7.3]	186 [7.3]	133 [5.2]	133 [5.2]
W306	SEAT TO ENGINE COVER — PASSENGER	168 [6.6]	168 [6.6]	131 [5.2]	131 [5.2]
REAR COMPARTMENT — CARGO					
H504	WHEELHOUSE HEIGHT	236 [9.3]	236 [9.3]	236 [9.3]	236 [9.3]
H505	CARGO HEIGHT — MAXIMUM	1339 [52.7]	1339 [52.7]	1339 [52.7]	1339 [52.7]
L202	CARGO LENGTH — CLOSED FRONT	3064 [120.6]	3064 [120.6]	3064 [120.6]	3064 [120.6]
L204	CARGO LENGTH AT BELT — CLOSED FRONT	2886 [113.6]	2886 [113.6]	2886 [113.6]	2886 [113.6]
L512	CARGO LENGTH TO ENGINE COVER	3511 [138.2]	3511 [138.2]	3511 [138.2]	3511 [138.2]
W201	CARGO WIDTH BETWEEN WHEELHOUSE	1297 [51.1]	1297 [51.1]	1297 [51.1]	1297 [51.1]
W500	CARGO BODY WIDTH AT FLOOR	1741 [68.6]	1741 [68.6]	1796 [70.7]	1796 [70.7]
V16	CARGO VOLUME — REAR OF FRONT SEAT - CU.FT.	236.2	236.2	234.9	234.9

CODE	DESCRIPTION	BASE BUCKET 8-PASS CARGO DOOR	BASE BUCKET 12-PASS SLIDING DOOR	CAPTAIN'S CHAIR 8-PASS SLIDING DOOR	CAPTAIN'S CHAIR 12-PASS SLIDING DOOR
REAR COMPARTMENT — SEATING					
H63	EFFECTIVE HEAD ROOM — 2ND	1019 [40.1]	1019 [40.1]	1019 [40.1]	1019 [40.1]
H71	SgRP 2ND LEFT/CENTER (Z)	665 [26.2]/ 665 [26.2]	665 [26.2]/ 665 [26.2]	665 [26.2]/ 665 [26.2]	665 [26.2]/ 665 [26.2]
H86	EFFECTIVE HEAD ROOM — 3RD	1019 [40.1]	1019 [40.1]	1019 [40.1]	1019 [40.1]
H86-4TH	EFFECTIVE HEAD ROOM — 4TH	–	962 [37.9]	–	962 [37.9]
H88	SgRP 3RD (Z)	665 [26.2]	665 [26.2]	665 [26.2]	665 [26.2]
H88-4TH	SgRP 4TH (Z)	–	665 [26.2]	–	665 [26.2]
L35	SgRP 2ND LEFT/CENTER (X)	2032[80.0]/ 2032 [80.0]	2032[80.0]/ 2032 [80.0]	2032[80.0]/ 2032 [80.0]	2032[80.0]/ 2032 [80.0]
L36	SgRP 3RD (X)	2883 [113.5]	2883 [113.5]	2883 [113.5]	2883 [113.5]
L36-4TH	SgRP 4TH (X)	–	3718 [146.4]	–	3718 [146.4]
L50	H-POINT COUPLE DISTANCE	844 [33.2]	844 [33.2]	844 [33.2]	844 [33.2]
L51	EFFECTIVE LEG ROOM — 2ND	966 [38.0]	937 [36.9]	1023 [40.3]	927 [36.5]
L85	SgRP COUPLE DISTANCE — 3RD	851 [33.5]	851 [33.5]	851 [33.5]	851 [33.5]
L85-4TH	SgRP COUPLE DISTANCE — 4TH	–	837 [32.9]	–	837 [32.9]
L86	EFFECTIVE LEG ROOM — 3RD	1046 [41.2]	1046 [41.2]	1046 [41.2]	1046 [41.2]
L86-4TH	EFFECTIVE LEG ROOM — 4TH	–	1033 [40.7]	–	1033 [40.7]
W4	SHOULDER ROOM — 2ND	1791 [70.5]	1791 [70.5]	1800 [70.9]	1800 [70.9]
W6	HIP ROOM — 2ND ARMREST DOWN/UP	1417 [55.8]/ 1688 [66.5]	1417 [55.8]/ 1688 [66.5]	1417 [55.8]/ 1744 [68.7]	1417 [55.8]/ 1744 [68.7]
W8	SEATING WIDTH — 2ND	1350 [53.2]	1350 [53.2]	1350 [53.2]	1350 [53.2]
W25	SgRP 2ND LEFT/CENTER (Y)	-545 [-21.4]/ -100 [-3.9]	-545 [-21.4]/ -100 [-3.9]	-545 [-21.4]/ -100 [-3.9]	-545 [-21.4]/ -100 [-3.9]
W26	SgRP 3RD LEFT/CENTER (Y)	-545 [-21.4]/ -99 [-3.9]	-545 [-21.4]/ -99 [-3.9]	545 [-21.4]/- -99 [-3.9]	-545 [-21.4]/ --99 [-3.9]
W26-4TH	SgRP 4TH — RIGHT OUTSIDE (Y)	–	631 [24.9]	–	631 [24.9]
W85	SHOULDER ROOM — 3RD	1808 [71.2]	1808 [71.2]	1808 [71.2]	1808 [71.2]
W85-4TH	SHOULDER ROOM — 4TH	–	1770 [69.7]	–	1770 [69.7]
W86	HIP ROOM — 3RD ARMREST DOWN/UP	1415 [55.7]/ 1698 [66.9]	1415 [55.7]/ 1698 [66.9]	1415 [55.7]/ 1698 [66.9]	1415 [55.7]/ 1698 [66.9]
W86-4TH	HIP ROOM — 4TH	–	1684 [66.3]	–	1684 [66.3]
W87	SEATING WIDTH — 3RD	1350 [53.2]	1350 [53.2]	1350 [532]	1350 [53.2]
W87-4TH	SEATING WIDTH — 4TH	–	1623 [63.9]	–	1623 [63.9]
DOOR OPENINGS (ENTRANCE ROOM)					
H202	REAR OPENING HEIGHT	1202 [47.3]	1202 [47.3]	1202 [47.3]	1202 [47.3]
H508	ENTRANCE HEIGHT — CARGO SIDE	1206 [47.5]	1206 [47.5]	1206 [47.5]	1206 [47.5]
L517	ENTRANCE LENGTH — CARGO SIDE	1196 [47.1]	1006 [39.6]	1006 [39.6]	1006 [39.6]
W203	REAR OPENING WIDTH @ FLOOR	1386 [54.6]	1386 [54.6]	1386 [54.6]	1386 [54.6]
W204	REAR OPENING WIDTH AT BELT	1382 [54.4]	1382 [54.4]	1382 [54.4]	1382 [54.4]

NOTE — [ ] DIMENSIONS ARE INCHES.

DIMENSIONAL DATA
E-350 SUPER DUTY
EXTENDED WAGON 12/15-PASSENGER

2003
MODEL YEAR

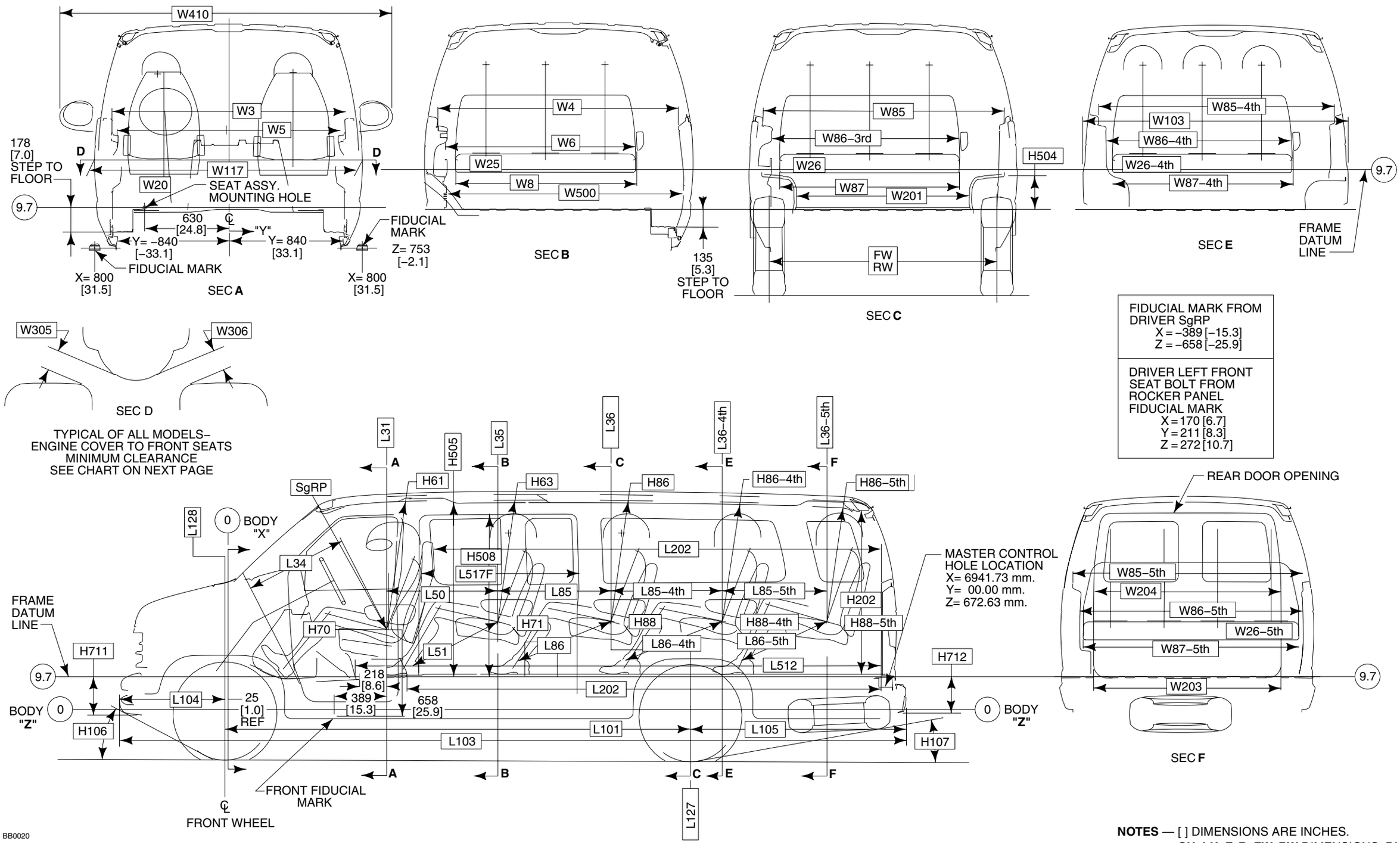

NOTES — [ ] DIMENSIONS ARE INCHES.
— **CH, LH, F, R, FW, RW** DIMENSIONS, PAGE 94.
— SEAT TRACK TRAVEL, PAGE 30.

DIMENSIONAL DATA
E-350 SUPER DUTY EXTENDED 12/15-PASSENGER

CODE	DESCRIPTION	BASE BUCKET CARGO DOOR	CAPTAIN'S CHAIR SLIDING DOOR
EXTERIOR			
H106	ANGLE OF APPROACH	28.1°	28.1°
H107	ANGLE OF DEPARTURE	10.6°	10.6°
H711	FRAME DATUM LINE TO BOTTOM OF FRONT BUMPER	206 [8.1]	206 [8.1]
H712	FRAME DATUM LINE TO BOTTOM OF REAR BUMPER	256 [10.1]	256 [10.1]
L101	WHEELBASE	3503 [137.9]	3503 [137.9]
L103	OVERALL LENGTH	5889 [231.8]	5889 [231.8]
L104	OVERHANG — FRONT	762 [30.0]	762 [30.0]
L105	OVERHANG — REAR	1623 [63.9]	1623 [63.9]
L127	REAR WHEEL ℄ X-COORDINATE	3478 [136.9]	3478 [136.9]
L128	FRONT WHEEL ℄ X-COORDINATE	-25 [-1.0]	-25 [-1.0]
W103	VEHICLE WIDTH	2013 [79.2]	2013 [79.2]
W117	BODY WIDTH AT H-POINT	1998 [78.7]	1998 [78.7]
W410	RECREATIONAL MIRROR	2590 [102.0]	2590 [102.0]
	SAIL MOUNT — MANUAL/POWER MIRROR	2434 [93.9]	2434 [93.9]
	TRAILER TOW MIRROR / EXTENDED (E550)	2605 [102.5]/ 2753 [108.4]	2605 [102.5]/ 2753 [108.4]
FRONT COMPARTMENT			
H61	EFFECTIVE HEAD ROOM — FRONT	1069[42.1]	1069 [42.1]
H70	SgRP FRONT LEFT/RIGHT (Z)	604 [23.8]/ 599 [23.6]	604 [23.8]/ 599 [23.6]
L31	SgRP FRONT LEFT/RIGHT (X)	1188 [46.8]/ 1211 [47.6]	1188 [46.8]/ 1211 [47.6]
L34	MAXIMUM EFFECTIVE LEG ROOM	1015 [40.0]	1015 [40.0]
W3	SHOULDER ROOM — FRONT	1729 [68.1]	1728 [68.0]
W5	HIP ROOM — FRONT	1670 [65.7]	1670 [65.7]
W20	SgRP FRONT LEFT/RIGHT (Y)	-518 [-20.4]/ 518 [20.4]	-518 [-20.4]/ 518 [20.4]
REAR COMPARTMENT — CARGO			
H504	WHEELHOUSE HEIGHT	220 [8.7]	220 [8.7]
H505	CARGO HEIGHT — MAXIMUM	1344 [52.9]	1339 [52.7]
L202	CARGO LENGTH — CLOSED FRONT	3572 [140.6]	3572 [140.6]
L204	CARGO LENGTH AT BELT — FRONT	3394 [133.6]	3394 [133.6]
L512	CARGO LENGTH TO ENGINE COVER	4019 [158.2]	4019 [158.2]
W201	CARGO WIDTH BETWEEN WHEELHOUSE	1312 [51.6]	1312 [51.6]
W305	SEAT TO ENGINE COVER — DRIVER	186 [7.3	133 [5.2]
W306	SEAT TO ENGINE COVER — PASSENGER	168 [6.6]	131 [5.2]
W500	CARGO BODY WIDTH AT FLOOR	1820 [71.7]	1820 [71.7]
V16	CARGO VOLUME — REAR OF FRONT SEAT - CU.FT.	8517.7 [300.8]	8483.9 [299.6]
REAR COMPARTMENT — SEATING			
H63	EFFECTIVE HEAD ROOM — 2ND	1019 [40.1]	1019 [40.1]
H71	SgRP 2ND LEFT/CENTER (Z)	665 [26.2]/ 665 [26.2]	665 [26.2]/ 665 [26.2]
H86	EFFECTIVE HEAD ROOM — 3RD	1019 [40.1]	1019 [40.1]
H86-4TH	EFFECTIVE HEAD ROOM — 4TH	1005 [39.6]	1005 [39.6]

CODE	DESCRIPTION	BASE BUCKET CARGO DOOR	CAPTAIN'SCHAIR SLIDING DOOR
REAR COMPARTMENT — SEATING (continued)			
H86-5TH	EFFECTIVE HEAD ROOM — 5TH	933 [36.7]	933 [36.7]
H88	SgRP 3RD (Z)	665 [26.2]	665 [26.2]
H88-4TH	SgRP 4TH (Z)	665 [26.2]	665 [26.2]
H88-5TH	SgRP 5TH (Z)	665 [26.2]	665 [26.2]
L35	SgRP 2ND LEFT/CENTER (X)	2032[80.0]	2032[80.0]
L36	SgRP 3RD (X)	2883 [113.5]	2883 [113.5]
L36-4TH	SgRP 4TH (X)	3718 [146.4]	3718 [146.4]
L36-5TH	SgRP 5TH (X)	4508[177.5]	4508 [177.5]
L50	H-POINT COUPLE DISTANCE	844 [33.2]	844 [33.2]
L51	EFFECTIVE LEG ROOM — 2ND	937 [36.9]	937 [36.9]
L85	SgRP COUPLE DISTANCE — 3RD	851 [33.5]	851 [33.5]
L85-4TH	SgRP COUPLE DISTANCE — 4TH	837 [32.9]	837 [32.9]
L85-5TH	SgRP COUPLE DISTANCE — 5TH	789 [31.0]	789 [31.0]
L86	EFFECTIVE LEG ROOM — 3RD	1046 [41.2]	1046 [41.2]
L86-4TH	EFFECTIVE LEG ROOM — 4TH	1033 [40.7]	1033 [40.7]
L86-5TH	EFFECTIVE LEG ROOM — 5TH	909 [35.8]	909 [35.8]
W4	SHOULDER ROOM — 2ND	1791 [70.5]	1799 [70.8]
W6	HIP ROOM — 2ND ARMREST DOWN/UP	1417 [55.8]/ 1689 [66.5]	1417 [55.8]/ 1745 [68.7]
W8	SEATING WIDTH — 2ND	1354 [53.3]	1354 [53.3]
W25	SgRP 2ND LEFT/CENTER (Y)	-545 [-21.4]/ -100 [-3.9]	-545 [-21.4]/ -100 [-3.9]
W26	SgRP 3RD LEFT/CENTER (Y)	-545 [-21.4]/ -99 [-3.9]	-545 [-21.4] -99 [-3.9]
W26-4TH	SgRP 4TH — LH (Y)	-545 [-21.4]	-546 [-21.5]
W26-5TH	SgRP 5TH — LH (Y)	631 [24.9]	631 [24.9]
W85	SHOULDER ROOM — 3RD	1808 [71.2]	1808 [71.2]
W85-4TH	SHOULDER ROOM — 4TH	1767 [69.6]	1767 [69.6]
W85-5TH	SHOULDER ROOM — 5TH	1730 [68.1]	1730 [68.1]
W86-3RD	HIP ROOM — 3RD ARMREST DOWN/UP	1413 [55.6]/ 1698 [66.9]	1413 [55.6]/ 1698 [66.9]
W86-4TH	HIP ROOM — 4TH ARMREST DOWN/UP (3-PASSENGER)	1402 [55.2]/ 1681 [66.2]	1402 [55.2]/ 1681 [66.2]
W86-5TH	HIP ROOM — 4TH/5TH (4-PASSENGER)	1684 [66.3]/ 1676 [66.0]	1684 [66.3]/ 1676 [66.0]
W87	SEATING WIDTH — 3RD	1354 [53.3]	1354 [53.3]
W87-4TH	SEATING WIDTH — 4TH (3-PASSENGER)	1350 [53.2]	1350 [53.2]
W87-5TH	SEATING WIDTH — 5TH (4-PASSENGER)	1623 [63.9]	1623 [63.9]
DOOR OPENINGS (ENTRANCE ROOM)			
H202	REAR OPENING HEIGHT	1224 [48.2]	1224 [48.2]
H508	ENTRANCE HEIGHT — CARGO SIDE	1206 [47.5]	1206 [47.5]
L517	ENTRANCE LENGTH — CARGO SIDE	1196 [47.1]	1006 [39.6]
W203	REAR OPENING WIDTH @ FLOOR	1384 [54.5]	1384 [54.5]
W204	REAR OPENING WIDTH AT BELT	1382 [54.4]	1382 [54.4]

NOTE — [ ] DIMENSIONS ARE INCHES.

DIMENSIONAL DATA
E-150/E-350 SUPER DUTY WAGON 7-PASSENGER
(QUAD CAPTAIN'S CHAIRS/3-PASSENGER BENCH)

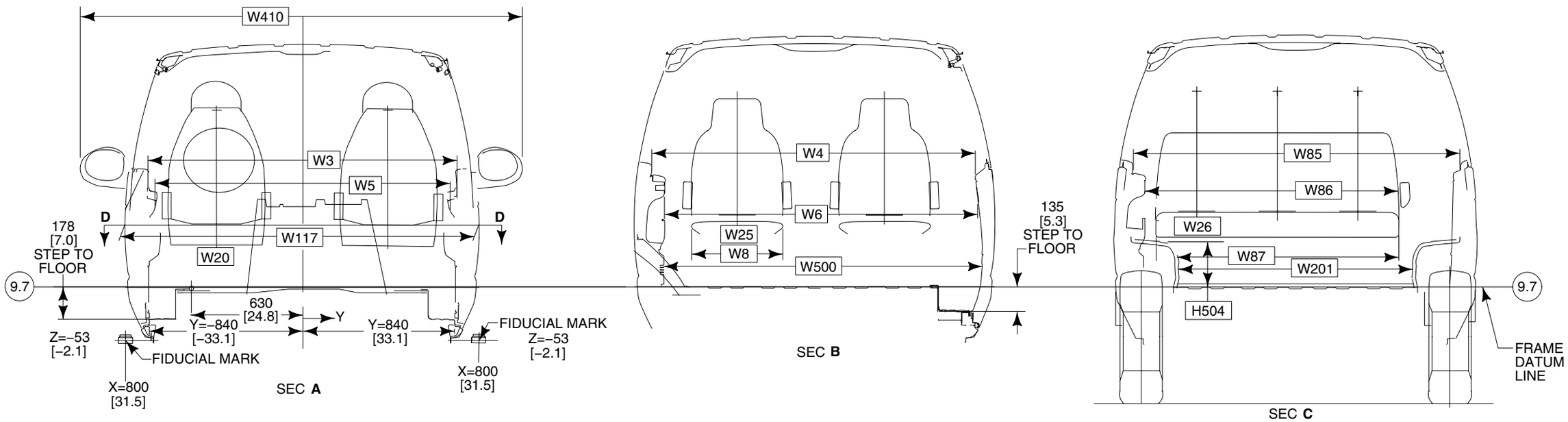

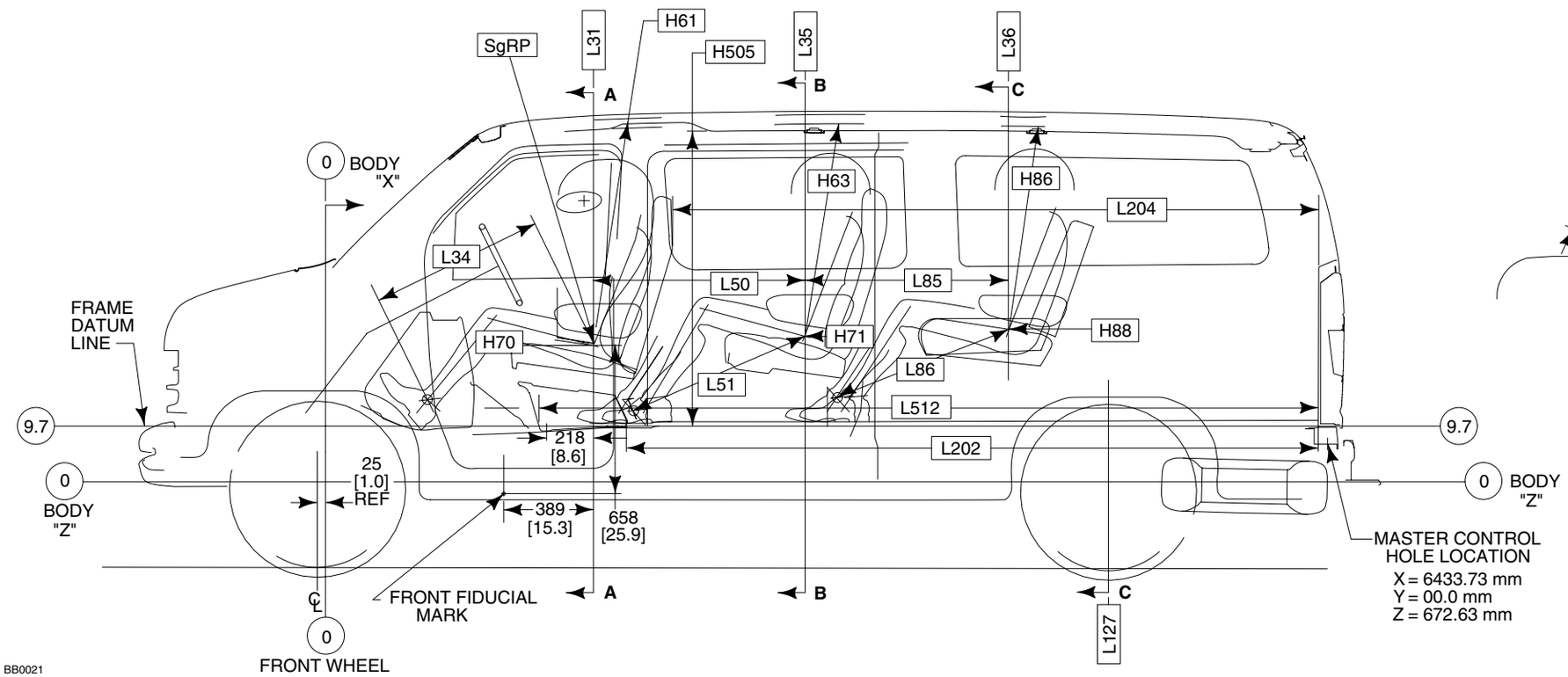

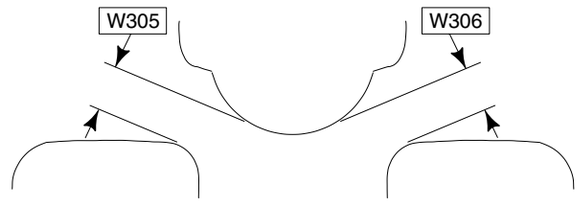

SEC **D**

TYPICAL OF ALL MODELS –
ENGINE COVER TO FRONT SEATS
MINIMUM CLEARANCE
SEE CHART ON NEXT PAGE

NOTES — [ ] DIMENSIONS ARE INCHES.
— **CH, LH, F, R, FW, RW** DIMENSIONS, PAGE 94.
— SEAT TRACK TRAVEL, PAGE 30.

DIMENSIONAL DATA
E-150/E-350 SUPER DUTY WAGON 7-PASSENGER
(QUAD CAPTAIN'S CHAIRS/3-PASSENGER BENCH)

CODE	DESCRIPTION	7-PASSENGER QUAD CAPTAIN'S CHAIRS/ 3-PASSENGER BENCH
FRONT COMPARTMENT		
H61	EFFECTIVE HEAD ROOM – FRONT	1069 [42.1]
H70	SgRP FRONT LH/RH (Z)	604 [23.8]/ 597 [23.5]
L31	SgRP FRONT LG/RH (X)	1189 [46.8]/ 1211 [47.7]
L34	MAXIMUM EFFECTIVE LEG ROOM	1016 [40.0]
W3	SHOULDER ROOM – FRONT	1728 [68.0]
W5	HIP ROOM – FRONT	1670 [65.7]
W20	SgRP FRONT LH/RH (Y)	-518 [-20.4]/ 518 [20.4]
W117	BODY WIDTH AT H-POINT	1998 [78.7]
W410	RECREATIONAL MIRROR	2590 [102.0]
	SAIL MOUNT –MANUAL/POWER	2434 [93.9]
	TRAILER TOW MIRROR / EXTENDED (E-550)	2650 [102.5]/ 2753 [108.4]
REAR COMPARTMENT – CARGO		
H504	WHEELHOUSE HEIGHT	236 [9.3]
H505	CARGO HEIGHT –MAXIMUM	1339 [52.7]
L202	CARGO LENGTH –CLOSED FRONT	3064 [120.6]
L204	CARGO LENGTH AT BELT –FRONT	2886 [113.6]
L512	CARGO LENGTH TO ENGINE COVER	3511 [138.2]
W201	CARGO WIDTH BETWEEN WHEELHOUSE	1297 [51.1]
W500	CARGO BODY WIDTH AT FLOOR	1686 [66.4]
V6	CARGO VOLUME –REAR OF FRONT SEAT –CU. FT.	237.1

CODE	DESCRIPTION	7-PASSENGER QUAD CAPTAIN'S CHAIRS/ 3-PASSENGER BENCH
REAR COMPARTMENT – SEATING		
H63	EFFECTIVE HEAD ROOM – 2ND	1045 [41.1]
H71	SgRP – 2ND (Z)	650 [25.6]
H86	EFFECTIVE HEAD ROOM – 3RD	1017 [40.4]
H88	SgRP – 3RD (Z)	665 [26.2]
L35	SgRP – 2ND (X)	2098 [82.6]
L36	SgRP – 3RD (X)	3020 [118.9]
L50	H-POINT COUPLE DISTANCE	910 [35.8]
L51	EFFECTIVE LEG ROOM – 2ND	1031 [40.6]
L85	SgRP COUPLE DISTANCE – 3RD	923 [36.4]
L86	LEG ROOM – 3RD	1083 [42.6]
W4	SHOULDER ROOM – 2ND	1852 [72.9]
W6	HIP ROOM – 2ND – ARMREST UP/DOWN	1745 [68.7]/ 1417 [55.8]
W8	SEATING WIDTH – 2ND	511 [20.1]
W25	SgRP – 2ND LH (Y)	–435 [–17.1]
W26	SgRP – 3RD LH (Y)	–545 [–21.4]
W85	SHOULDER ROOM – 3RD	1801 [70.9]
W86	HIP ROOM – 3RD – ARMREST UP/DOWN	1710 [67.3]/ 1415 [55.7]
W87	SEATING WIDTH	1348 [53.1]
W305	SEAT TO ENGINE COVER –DRIVER	133 [5.24]
W306	SEAT TO ENGINE COVER –PASSENGER	131 [5.17]

NOTE — [ ] DIMENSIONS ARE INCHES.

DIMENSIONAL DATA
E-150/250/350 SUPER DUTY VAN

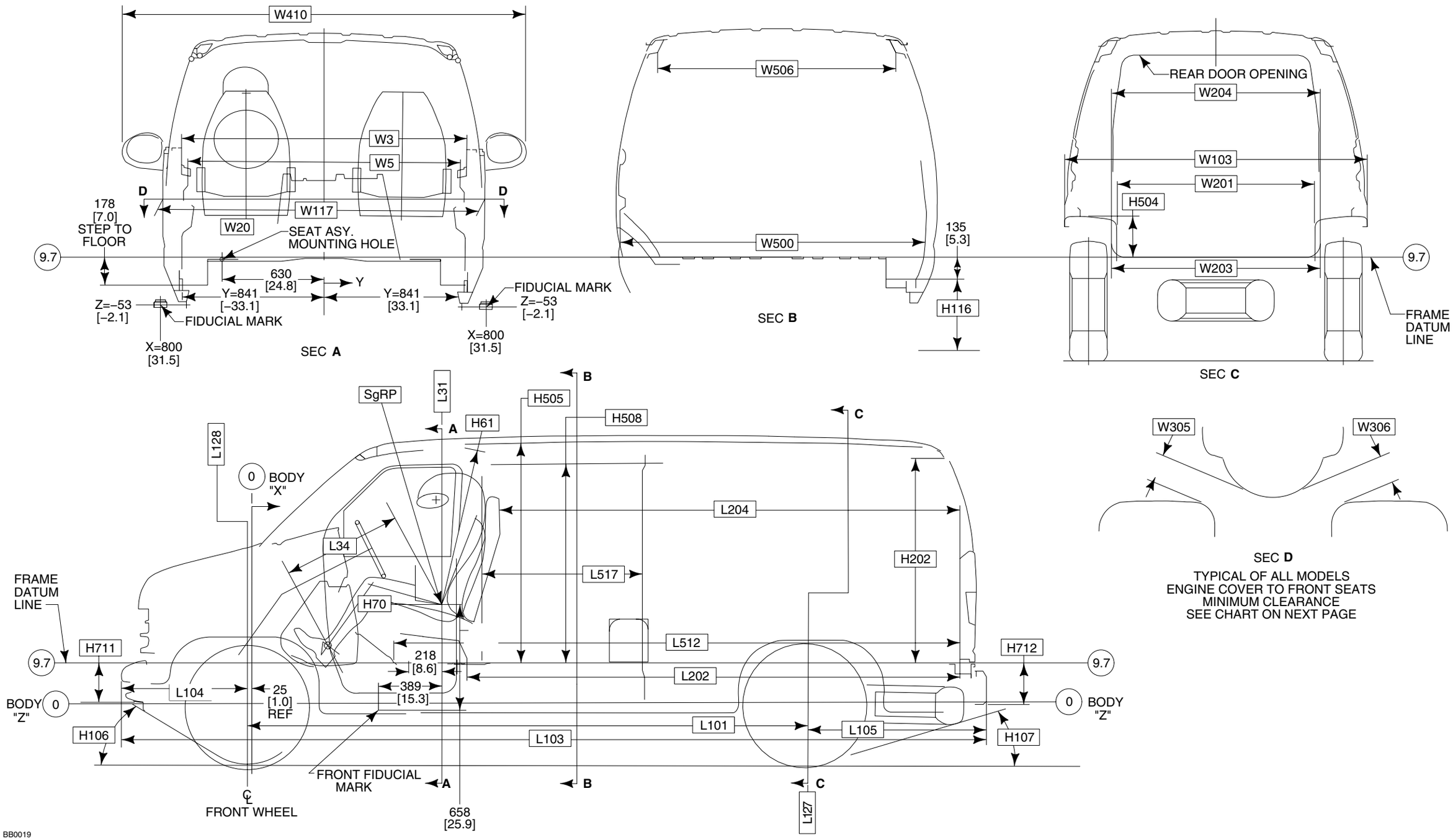

NOTES — [ ] DIMENSIONS ARE INCHES.
— **CH, LH, F, R, FW** AND **RW**, PAGE 94.
— SEAT TRACK TRAVEL, PAGE 30.

DIMENSIONAL DATA
E-150/250/350 SUPER DUTY VAN

CODE	DESCRIPTION	REGULAR VAN BASE BUCKET 2-PASS SLIDING DOOR	REGULAR VAN BASE BUCKET 2-PASS CARGO DOOR	SUPER VAN CAPTAIN'S CHAIR 2-PASS CARGO DOOR
EXTERIOR				
H106	ANGLE OF APPROACH	24.9°	24.5°	27.7°
H107	ANGLE OF DEPARTURE	13.6°	13.4°	12.0°
H711	FRAME DATUM LINE TO BOTTOM OF FRONT BUMPER	—	206 [8.1]	—
H712	FRAME DATUM LINE TO BOTTOM OF REAR BUMPER	—	256 [10.1]	—
L101	WHEELBASE	3505 [138.0]	3505 [138.0]	3508 [138.1]
L103	OVERALL LENGTH	5381 [211.8]	5382 [211.9]	5889 [231.8]
L104	OVERHANG –FRONT	762 [30.0]	764 [30.1]	762 [30.0]
L105	OVERHANG –REAR	1114 [43.8]	1112 [43.8]	1619 [63.7]
L127	REAR WHEEL ℄ X-COORDINATE	5479 [137.0]	3480 [137.0]	5482 [137.1]
L128	FRONT WHEEL ℄ X-COORDINATE	-25 [-1.0]	-25 [-1.0]	-25 [-1.0]
W103	VEHICLE WIDTH	2014 [79.3]	2014 [79.3]	2014 [79.3]
W117	BODY WIDTH AT H-POINT	1998 [78.7]	1999 [78.7]	1998 [78.7]
W410	RECREATIONAL MIRROR	2590 [102.0]	2590 [102.0]	2590 [102.0]
	SAIL MOUNT –MANUAL/POWER	2434 [93.9]	2434 [93.9]	2434 [93.9]
	TRAILER TOW MIRROR /EXTENDED (E550)	2605 [102.5]/ 2753 [108.4]	2605 [102.5]/ 2753 [108.4]	2605 [102.5]/ 2753 [108.4]
FRONT COMPARTMENT				
H61	EFFECTIVE HEAD ROOM –FRONT	1069 [42.1]	1079 [42.1]	1069 [42.1
H70	SgRP –LH/RH –FRONT (Z)	1104 [23.8]	604 [23.8]/ 597 [23.5]	1104 [23.8]
L31	SgRP –LH/RH –FRONT (X)	1189 [46.8]/ 1211 [49.1]	1189 [46.8]/ 1247 [49.1]	1189 [46.8]/ 1211 [49.1]
L34	MAXIMUM EFFECTIVE LEG ROOM SgRP –FRONT	1015 [40.0]	1016 [40.0]	1015 [40.0]
W3	SHOULDER ROOM SgRP –FRONT	1729 [68.1]	1737 [68.4]	1729 [68.1]

CODE	DESCRIPTION	REGULAR VAN BASE BUCKET 2-PASS SLIDING DOOR	REGULAR VAN BASE BUCKET 2-PASS CARGO DOOR	SUPER VAN CAPTAIN'S CHAIR 2-PASS CARGO DOOR
FRONT COMPARTMENT (continued)				
W5	HIP ROOM –FRONT	1670 [65.7]	1670 [65.7]	1670 [65.7]
W20	SgRP –LH/RH –FRONT (Y)	-518 [-20.4]/ 518 [20.4]	-518 [-20.4]/ 518 [20.4]	-518 [-20.4]/ 518 [20.4]
W305	SEAT TO ENGINE COVER –DRIVER	133 [5.2]	186 [7.3]	186 [7.3]
W306	SEAT TO ENGINE COVER –PASSENGER	131 [5.2]	168 [6.6]	168 [6.6]
REAR COMPARTMENT — CARGO				
H504	WHEELHOUSE HEIGHT	236 [9.3]	241 [9.5]	241 [9.5]
H505	CARGO HEIGHT –MAXIMUM	1339 [52.7]	1333 [52.2]	1368 [53.9]
L202	CARGO LENGTH –CLOSED FRONT	3064 [120.6]	3061 [120.5]	3581 [141.0]
L204	CARGO LENGTH AT BELT –FRONT	2886 [113.6]	2857 [112.5]	3394 [133.6]
L512	CARGO LENGTH TO ENGINE COVER	3511 [138.2]	3711 [146.1]	4019 [158.2]
W201	CARGO WIDTH BETWEEN WHEELHOUSE	1312 [51.6]	1341 [52.8]	1330 [52.3]
W500	CARGO BODY WIDTH AT FLOOR	1796 [70.7]	1839 [72.4]	1763 [69.4]
W506	CARGO WIDTH AT ROOF RAIL	1559 [61.4]	1559 [61.4]	1559 [61.4]
V16	CARGO VOLUME –REAR OF FRONT SEAT WHICH IS IN ITS FORWARD MOST ADJUSTMENT –CU.FT.	252.5	256.5	297.1
DOOR OPENINGS (ENTRANCE ROOM)				
H116	STEP HEIGHT –2ND	458 [18.0]	458 [18.0]	522 [20.6]
H202	REAR OPENING HEIGHT	1202 [47.3]	1227 [48.3]	1244 [49.0]
H508	ENTRANCE HEIGHT –CARGO SIDE	1206 [47.5]	1227 [48.3]	1226 [48.3]
L517	ENTRANCE LENGTH –CARGO SIDE	1006 [39.6]	1196 [47.1]	1196 [47.1]
W203	REAR OPENING WIDTH AT FLOOR	1386 [54.6]	1305 [51.4]	1381 [54.4]
W204	REAR OPENING WIDTH AT BELT	1382 [54.4]	1382 [54.4]	1382 [54.4]

NOTE — [ ] DIMENSIONS ARE INCHES.

DIMENSIONAL DATA
E-150/250/350 SUPER DUTY
CREW VAN (REGULAR/EXTENDED LENGTH)

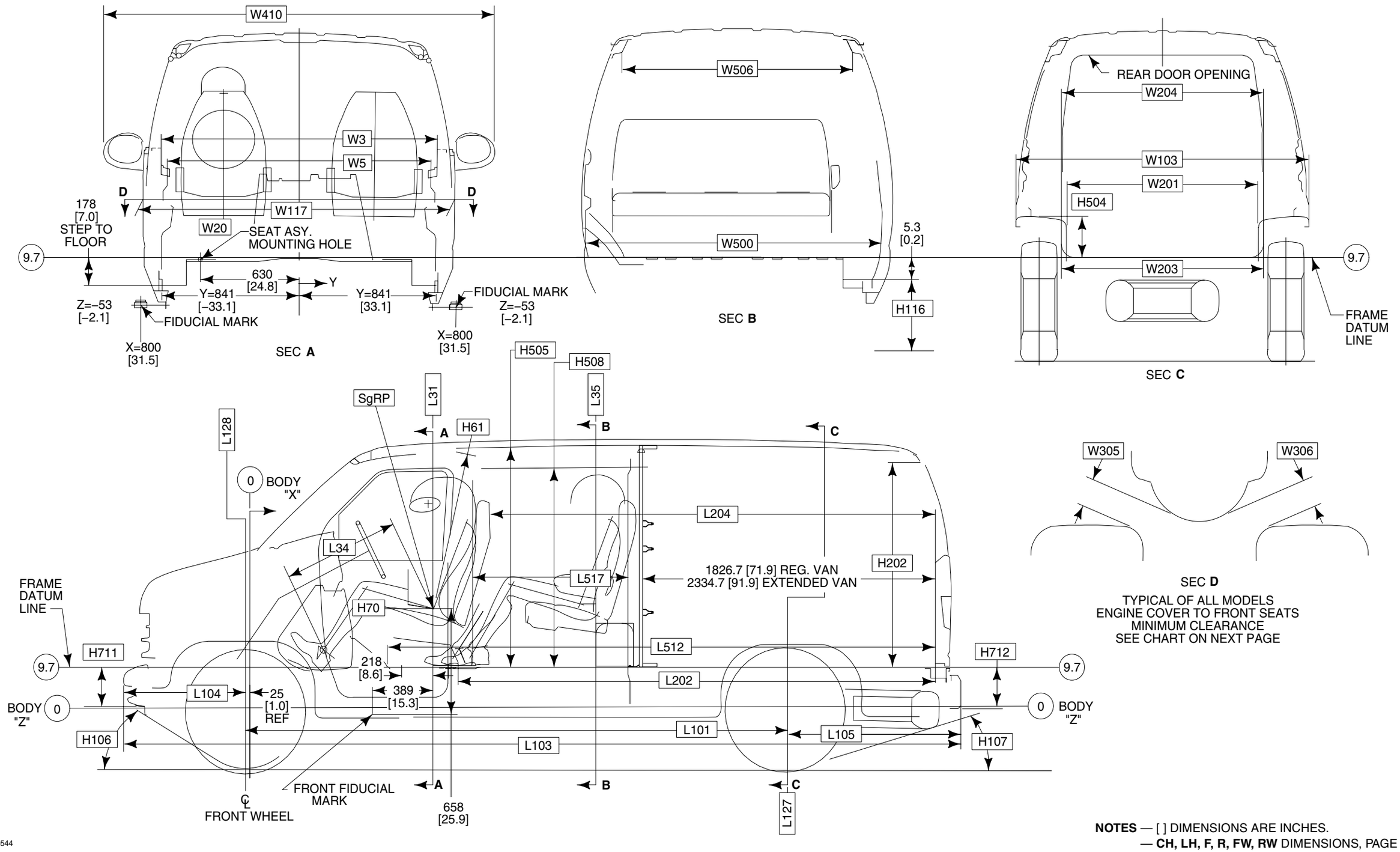

NOTES — [ ] DIMENSIONS ARE INCHES.
— **CH, LH, F, R, FW, RW** DIMENSIONS, PAGE 94.
— SEAT TRACK TRAVEL, PAGE 30.

DIMENSIONAL DATA
E-150/250/350 SUPER DUTY
CREW VAN (REGULAR/EXTENDED LENGTH)

CODE	DESCRIPTION	REGULAR LENGTH BASE BUCKET 5-PASS CARGO DOOR	EXTENDED LENGTH BASE BUCKET 5-PASS CARGO DOOR
EXTERIOR			
H106	ANGLE OF APPROACH	24.9°	27.7°
H107	ANGLE OF DEPARTURE	13.2°	12.0°
H711	FRAME DATUM LINE TO BOTTOM OF FRONT BUMPER	206 [8.1]	206 [8.1]
H712	FRAME DATUM LINE TO BOTTOM OF REAR BUMPER	256 [10.1]	256 [10.1]
L101	WHEELBASE	3505 [138.0]	3508 [138.1]
L103	OVERALL LENGTH	5381 [211.8]	5889 [231.8]
L104	OVERHANG – FRONT	762 [30.0]	762 [30.0]
L105	OVERHANG – REAR	1114 [43.8]	1619 [63.7]
L127	REAR WHEEL ℄ X-COORDINATE	3479 [137.0]	3482 [137.1]
L128	FRONT WHEEL ℄ X-COORDINATE	-25 [-1.0]	-25 [-1.0]
W103	VEHICLE WIDTH	2014 [79.3]	2014 [79.3]
W117	BODY WIDTH AT H-POINT	1998 [78.7]	1998 [78.7]
W410	RECREATIONAL MIRROR	2590 [102.0]	2590 [102.0]
	SAIL MOUNT – MANUAL/POWER MIRROR	2434 [93.9]	2434 [93.9]
	TRAILER TOW MIRROR / EXTENDED (E550)	2605 [102.5]/ 2753 [108.4]	2605 [102.5]/ 2753 [108.4]
FRONT COMPARTMENT			
H61	EFFECTIVE HEAD ROOM – FRONT	1069 [42.1]	1069 [42.1]
H70	SgPR – LH/RH – FRONT (Z)	604 [23.8] 597 [23.5]	604 [23.8] 597 [23.5]
L31	SgPR – LH/RH – FRONT (X)	1188 [46.8]/ 1211 [47.7]	1188 [46.8]/ 1211 [47.7]
L34	MAXIMUM EFFECTIVE LEG ROOM – FRONT	1015 [40.0]	1015 [40.0]
W3	SHOULDER ROOM – FRONT	1728 [68.0]	1729 [68.1]
W5	HIP ROOM — FRONT	1670 [65.7]	1670 [65.7]
W20	SgRP – LH/RH – FRONT (Y)	-518 [-20.4]/ 518 [20.4]	-518 [-20.4]/ 518 [20.4]
W305	SEAT TO ENGINE COVER – DRIVER	186 [7.3]	186 [7.3]
W306	SEAT TO ENGINE COVER – PASSENGER	168 [6.6]	168 [6.6]

CODE	DESCRIPTION	REGULAR LENGTH BASE BUCKET 5-PASS CARGO DOOR	EXTENDED LENGTH BASE BUCKET 5-PASS CARGO DOOR
REAR COMPARTMENT — SEATING			
H63	EFFECTIVE HEAD ROOM – 2ND	1019 [40.1]	1019 [40.1]
H71	SgRP 2ND LEFT/CENTER (Z)	665 [26.2]/ 665 [26.2]	665 [26.2]/ 665 [26.2]
L35	SgRP 2ND LEFT/CENTER (X)	2032 [80.0]	2032 [80.0]
L50	H-POINT COUPLE DISTANCE	844 [33.2]	844 [33.2]
L51	EFFECTIVE LEG ROOM – 2ND	966 [38.0]	966 [38.0]
W4	SHOULDER ROOM – 2ND	1791 [70.5]	1791 [70.5]
W6	HIP ROOM – 2ND ARMREST DOWN/UP	1417 [55.8]/ 1688 [66.5]	1417 [55.8]/ 1688 [66.5]
W8	SEATING WIDTH – 2ND	1350 [53.2]	1350 [53.2]
W25	SgRP 2ND LEFT/CENTER (Y)	-545 [-21.4]/ -100 [-3.9]	-545 [-21.4]/ -100 [-3.9]
REAR COMPARTMENT — CARGO			
H504	WHEELHOUSE HEIGHT	236 [9.3]	240 [9.5]
H505	CARGO HEIGHT – MAXIMUM	1368 [53.9]	1368 [53.9]
L202	CARGO LENGTH – CLOSED FRONT	3064 [120.6]	3581 [141.0]
L204	CARGO LENGTH AT BELT – FRONT	2886 [113.6]	3394 [133.6]
L512	CARGO LENGTH TO ENGINE COVER	3511 [138.2]	4019 [158.2]
W201	CARGO WIDTH BETWEEN WHEELHOUSE	1330 [52.3]	1330 [52.3]
W500	CARGO BODY WIDTH AT FLOOR	1763 [69.4]	1763 [69.4]
W506	CARGO WIDTH AT ROOF RAIL	1559 [61.4]	1559 [61.4]
V16	CARGO VOLUME – REAR OF PARTITION LITERS/CU.FT.	3805.7/134.4	4872.7/172.1
DOOR OPENINGS (ENTRANCE ROOM)			
H116	STEP HEIGHT – 2ND	458 [18.0]	522 [20.6]
H202	REAR OPENING HEIGHT	1202 [47.3]	1244 [49.0]
H508	ENTRANCE HEIGHT – CARGO SIDE	1226 [48.3]	1226 [48.3]
L517	ENTRANCE LENGTH – CARGO SIDE	1196 [47.1]	1196 [47.1]
W203	REAR OPENING WIDTH AT FLOOR	1381 [54.4]	1381 [54.4]
W204	REAR OPENING WIDTH AT BELT	1382 [54.4]	1382 [54.4]

NOTE — [ ] DIMENSIONS ARE INCHES.

AXLE/TIRE/VEHICLE HEIGHT DATA
E-SERIES VAN/WAGON

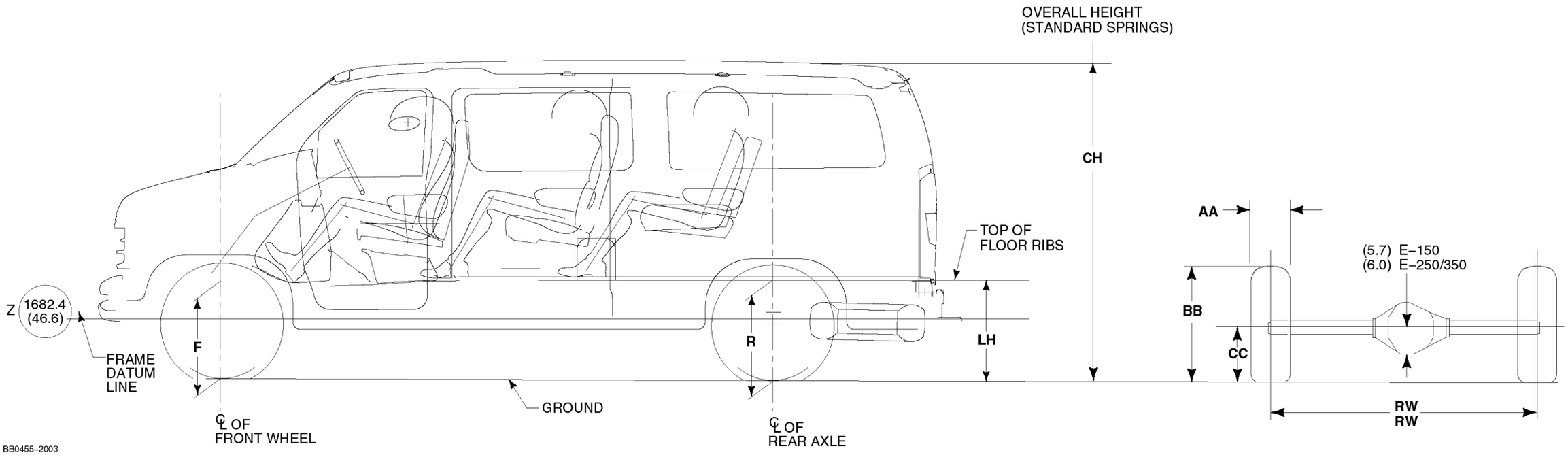

MODEL	WB [in]	GVWR [lb]	BASE TIRE(5)	F HEIGHT AT WHEEL FRONT(1)		R HEIGHT AT AXLE REAR(1)		LH (1)		CH (1)		AA	BB	CC*	FW	RW
				CURB(2)	LOADED(3)	CURB(2)	LOADED(3)	EMPTY	LOADED	EMPTY	LOADED					
E-150 VAN	138	6700	P235/75R15XL	597 [23.5]	564 [22.2]	637 [25.1]	561 [22.1]	683 26.9]	574 [22.6]	2050 [80.7]	1976 [77.8]	218 [8.6]	676 [26.6]	328 [12.9]	1763 [69.4]	1707 [67.2]
E-150 VAN(4)	138	7000	P235/75R15XL	625 [24.6]	576 [22.7]	655 [25.8]	569 [22.4]	686 [27.0]	584 [23.0]	2055 [80.9]	1984 [78.1]	236 [9.3]	754 [29.7]	333 [13.1]	1763 [69.4]	1707 [67.2]
E-250 VAN	138	7200	LT225/75R16D	663 [26.1]	625 [24.6]	703 [27.7]	640 [25.2]	742 [29.2]	640 [25.2]	2118 [83.4]	2032 [80.0]	236 [9.3]	752 [29.6]	345 [13.6]	1763 [69.4]	1692 [66.6]
E-250 VAN EXTENDED VAN	138	7300	LT225/75R16D	663 [26.1]	625 [24.6]	734 [28.9]	640 [25.2]	752 [29.6]	645 [25.4]	2118 [83.4]	2032 [80.0]	236 [9.3]	752 [29.6]	345 [13.6]	1763 [69.4]	1692 [66.6]
E-350 SUPER DUTY VAN	138	9500	LT245/75R16E	703 [27.7]	643 [25.3]	790 [31.1]	665 [26.2]	808 [31.8]	668 [26.3]	2136 [84.1]	2045 [80.5]	263 [10.3]	767 [30.2]	358 [14.1]	1763 [69.4]	1687 [66.4]
E-350 SUPER DUTY EXTENDED VAN	138	9400	LT245/75R16E	711 [28.0]	640 [25.2]	785 [30.9]	668 [26.3]	813 [32.0]	676 [26.6]	2136 [84.1]	2045 [80.5]	263 [10.3]	767 [30.2]	358 [14.1]	1763 [69.4]	1687 [66.4]
E-150 WAGON	138	7000	P235/75R15XL	620 [24.4]	576 [22.7]	665 [26.2]	561 [22.1]	683 [36.9]	584 [23.0]	2055 [80.9]	1984 [78.1]	236 [9.3]	754 [29.7]	333 [13.1]	1763 [69.4]	1707 [67.2]
E-350 SUPER DUTY WAGON	138	8700	LT225/75R16E	703 [27.7]	627 [24.7]	721 [28.4]	612 [24.1]	731 [28.8]	610 [24.0]	2118 [83.4]	2032 [80.0]	236 [9.3]	752 [29.6]	345 [13.6]	1763 [69.4]	1687 [66.4]
E-350 SUPER DUTY EXTENDED WAGON	138	9100 9300	LT245/75R16E	706 [27.8]	643 [25.3]	747 [29.4]	645 [25.4]	767 [30.2]	645 [25.4]	2136 [84.1]	2045 [80.5]	263 [10.3]	780 [30.7]	358 [14.1]	1763 [69.4]	1687 [66.4]

(1) THE HEIGHT DATA SHOWN REPRESENTS DIMENSIONS OF A BASE/STANDARD VEHICLE WITH NO OPTIONS, ACTUAL HEIGHT MAY VARY DUE TO PRODUCTION TOLERANCES.
(2) HEIGHT AT BASE CURB WEIGHT WITH STANDARD SPRINGS.
(3) LOADED HEIGHT AT SPRING RATING WITH STANDARD SPRINGS.
(4) RV CONVERSION.
(5) ADDITIONAL TIRE DATA, PAGE 117.

* — STATIC LOADED RADIUS REPRESENTS AXLE ℄ TO GROUND WITH MAXIMUM RATED LOAD ON TIRE AT MAXIMUM PRESSURE.

NOTES — [ ] DIMENSIONS ARE INCHES.
— **F/R** - TO FRAME DATUM LINE 633.7 MM (24.95 INCHES); TO TOP OF FLOOR BEADS ADD 113.2 MM (4.46 INCHES).

INCOMPLETE E-150/250/350 SUPER DUTY WITH RECREATIONAL TRIM

NOTE: This sketch identifies the locations in 138-inch wheelbase Regular Length E-Series van equipped with Recreational Trim where Ford Motor Company provides anchorages for attachment of the upper or “D-ring” ends of the torso restraints for second and third row seats that maybe installed by subsequent-stage manufacturers. The longitudinal distances from the vertical reference line for the second and third row seat anchorages are 116.4 inches and 158.5 inches, respectively.

NOTE: If a left-hand, second-row seat is installed, an anchorage must be installed by the subsequent-stage manufacturer on the left side of the vehicle at 16.4 inches. (This anchorage should be located symmetrically opposite the corresponding right-hand anchorage installed by Ford.) A nut mounted to a reinforcement plate and four rivets are furnished for this purpose by Ford with the incomplete vehicle as part of the Recreational Trim. The sketch also identifies the rearmost seating reference points (SgRP’s) for second and third row seats that may be installed. These are 106.1 inches and 148.4 inches (longitudinal), respectively. Call the Ford Truck Body Builders Advisory Service if there are any questions regarding this sketch.

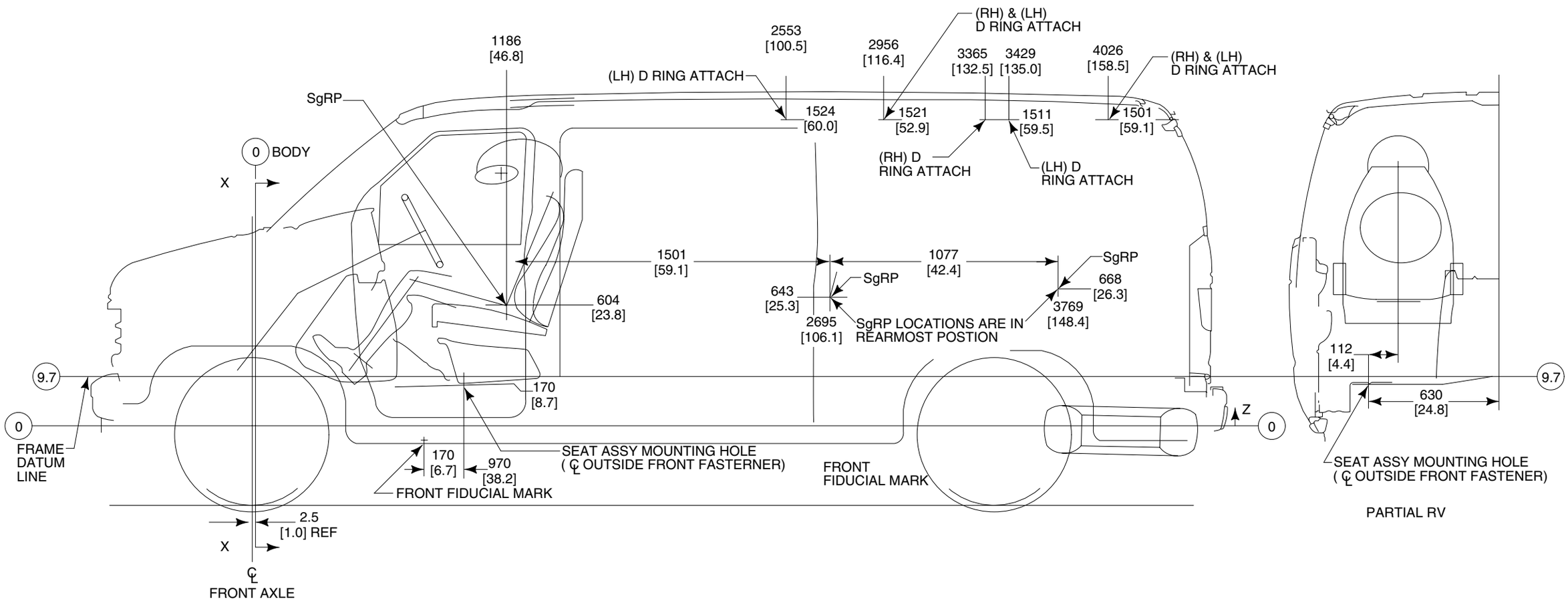

BB0126

NOTES — [ ] DIMENSIONS ARE INCHES.
— **CH, LH, F, R, FW** AND **RW**, SEE PAGE 94.
— SEAT TRACK TRAVEL, PAGE 30.

E-350 SUPER DUTY CUTAWAY/CHASSIS CAB
138" WHEELBASE (SRW/DRW)

2003
MODEL YEAR

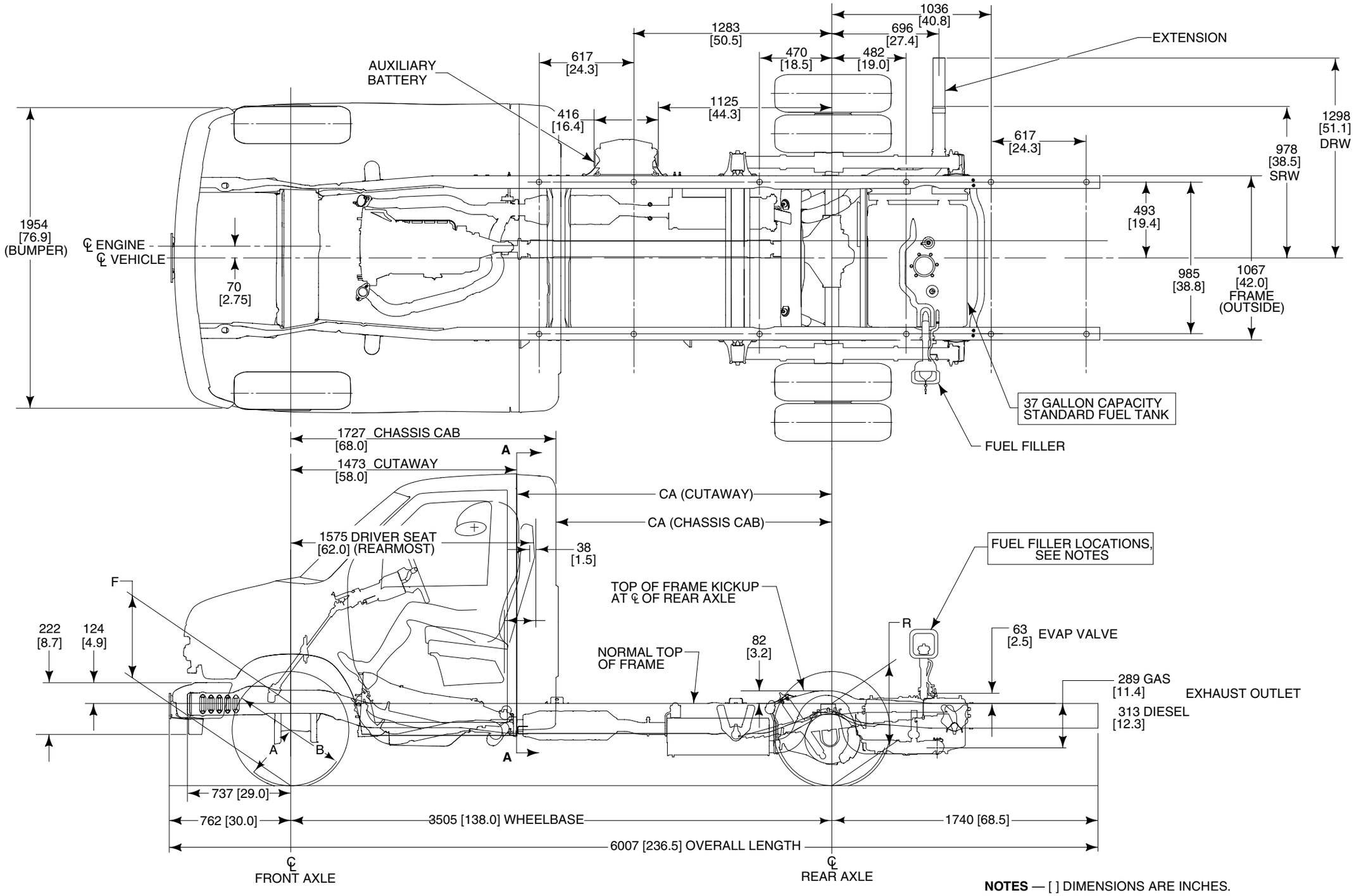

BB0022 2003

NOTES — [ ] DIMENSIONS ARE INCHES.
— FOR SECTION A, SEE PAGE 106.
— FOR DIMENSIONS NOT SHOWN, SEE PAGE 115-116.
— FOR FUEL FILLER LOCATIONS, SEE PAGE 119.
— FOR CA DIMENSIONS, SEE MODEL LINE UP.

E-350 SUPER DUTY CUTAWAY/CHASSIS CAB
138" WHEELBASE (SRW/DRW)

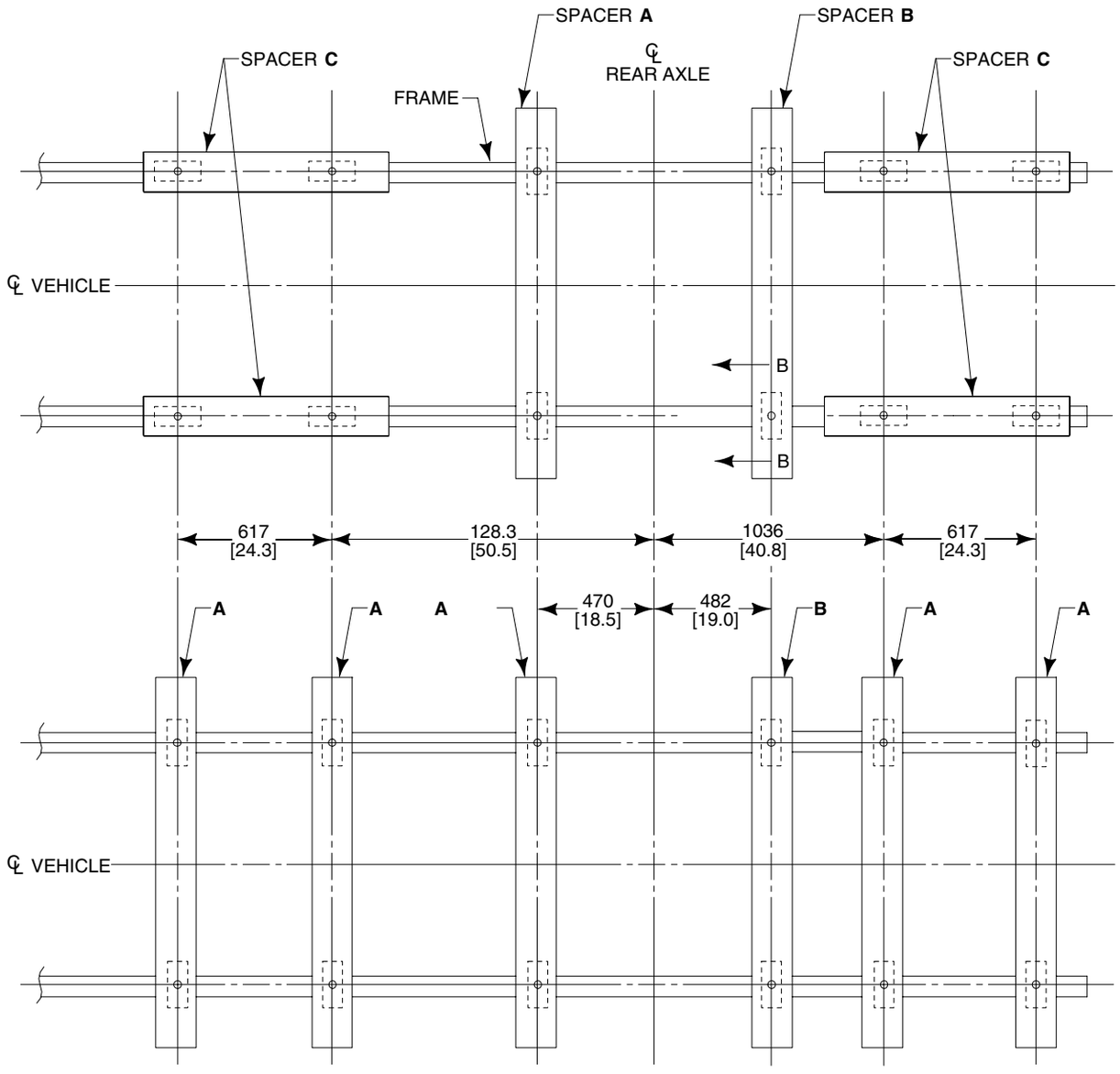

INCLUDES 6 LATERAL FRAME SPACERS WITH 12 BODY MOUNTS. USES SAME FRAME HOLES FOR LONGITUDINAL/LATERAL FRAME SPACER STANDARD SYSTEM.

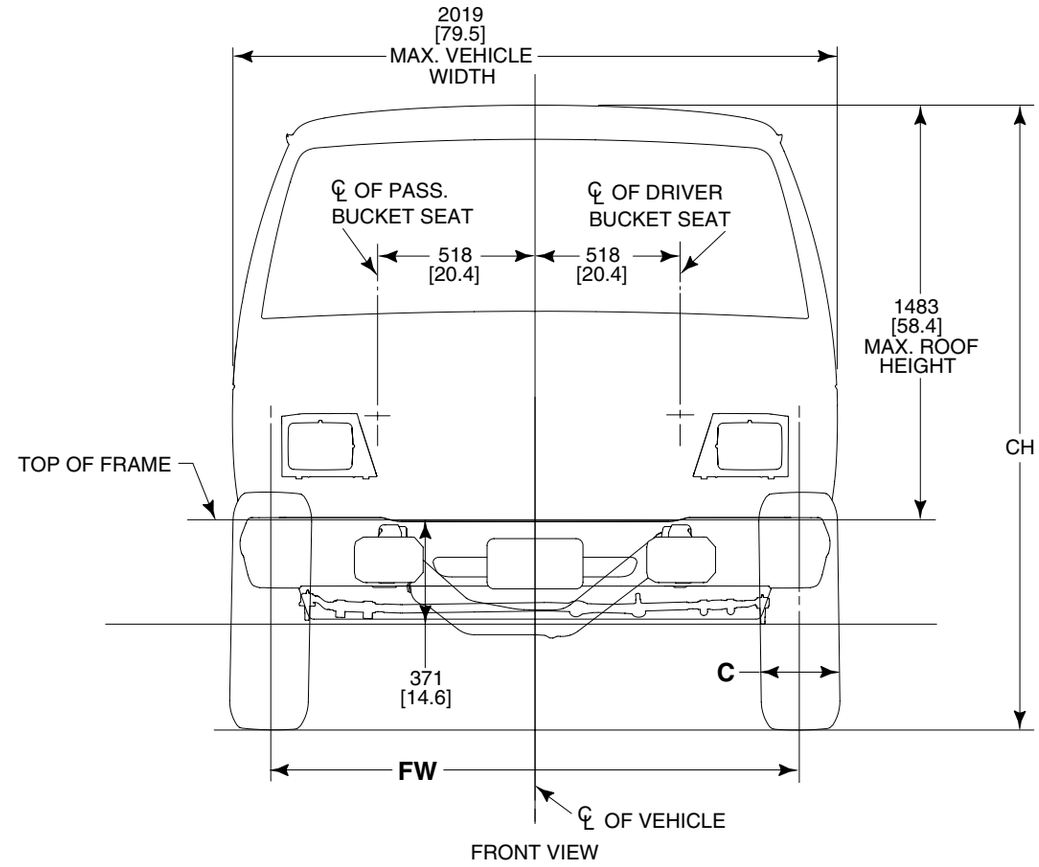

FRONT VIEW

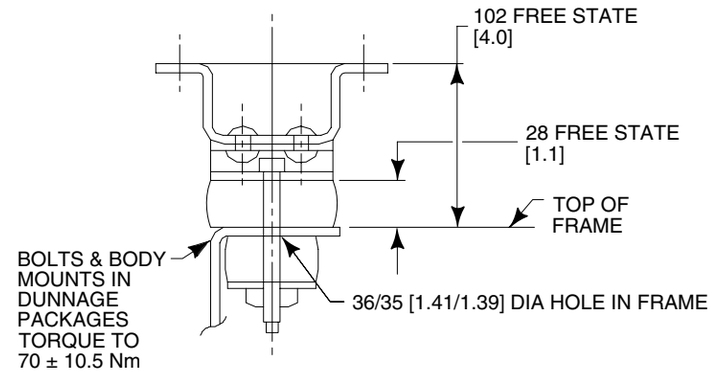

SEC B

NOTES — [ ] DIMENSIONS ARE INCHES.
— FOR SECTION A, SEE PAGE 106.
— FOR DIMENSIONS NOT SHOWN, SEE PAGE 115-116.

BB0023

E-350/450 SUPER DUTY CUTAWAY/CHASSIS CAB
158" WHEELBASE (DRW)

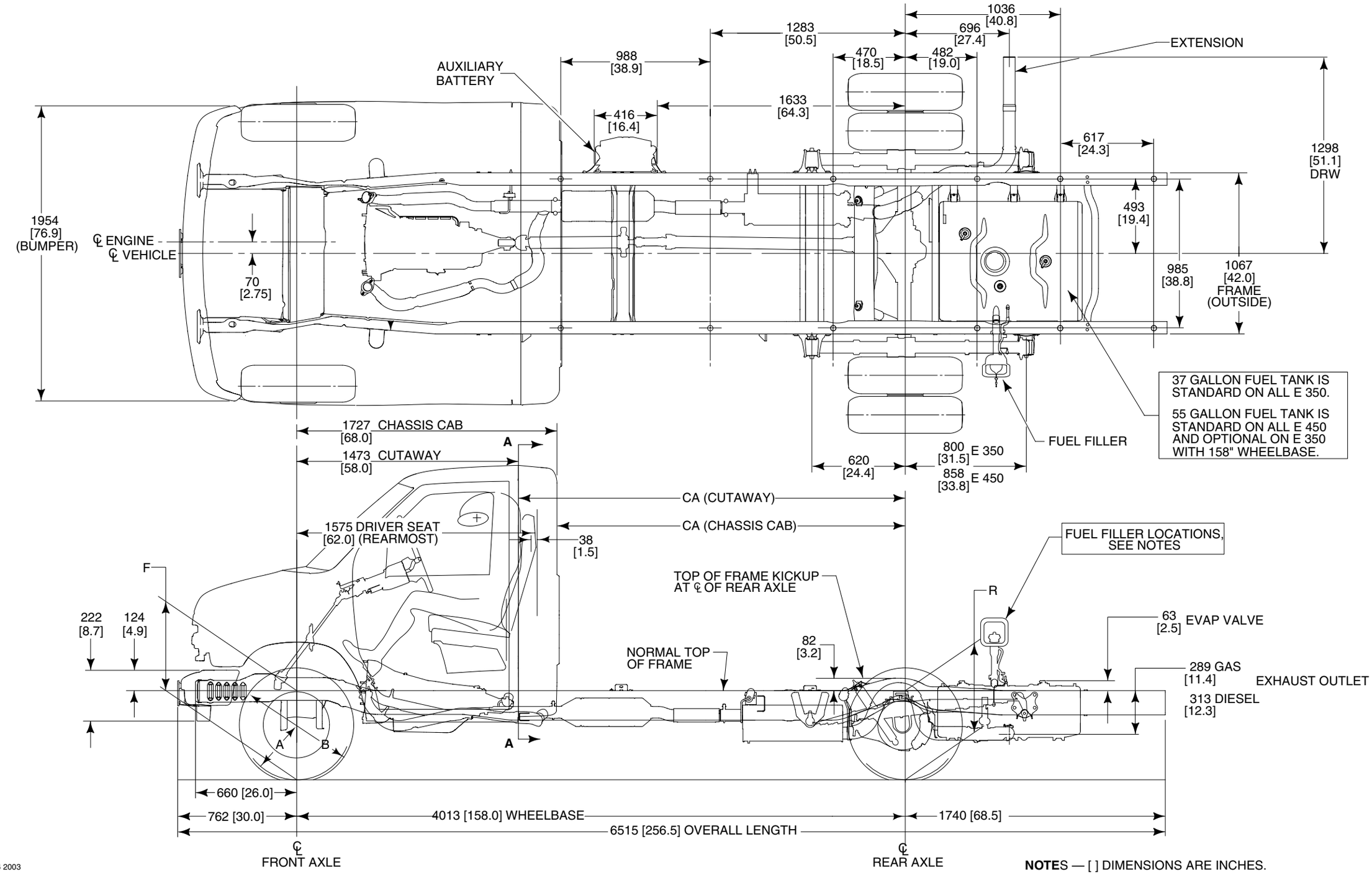

BB0024 2003

NOTES — [ ] DIMENSIONS ARE INCHES.
— FOR SECTION A, SEE PAGE 106.
— FOR DIMENSIONS NOT SHOWN, SEE PAGE 115-116.
— FOR FUEL FILLER LOCATIONS, SEE PAGE 119.
— FOR CA DIMENSION, SEE MODEL LINE UP.

E-350/450 SUPER DUTY CUTAWAY/CHASSIS CAB
158" WHEELBASE (DRW)

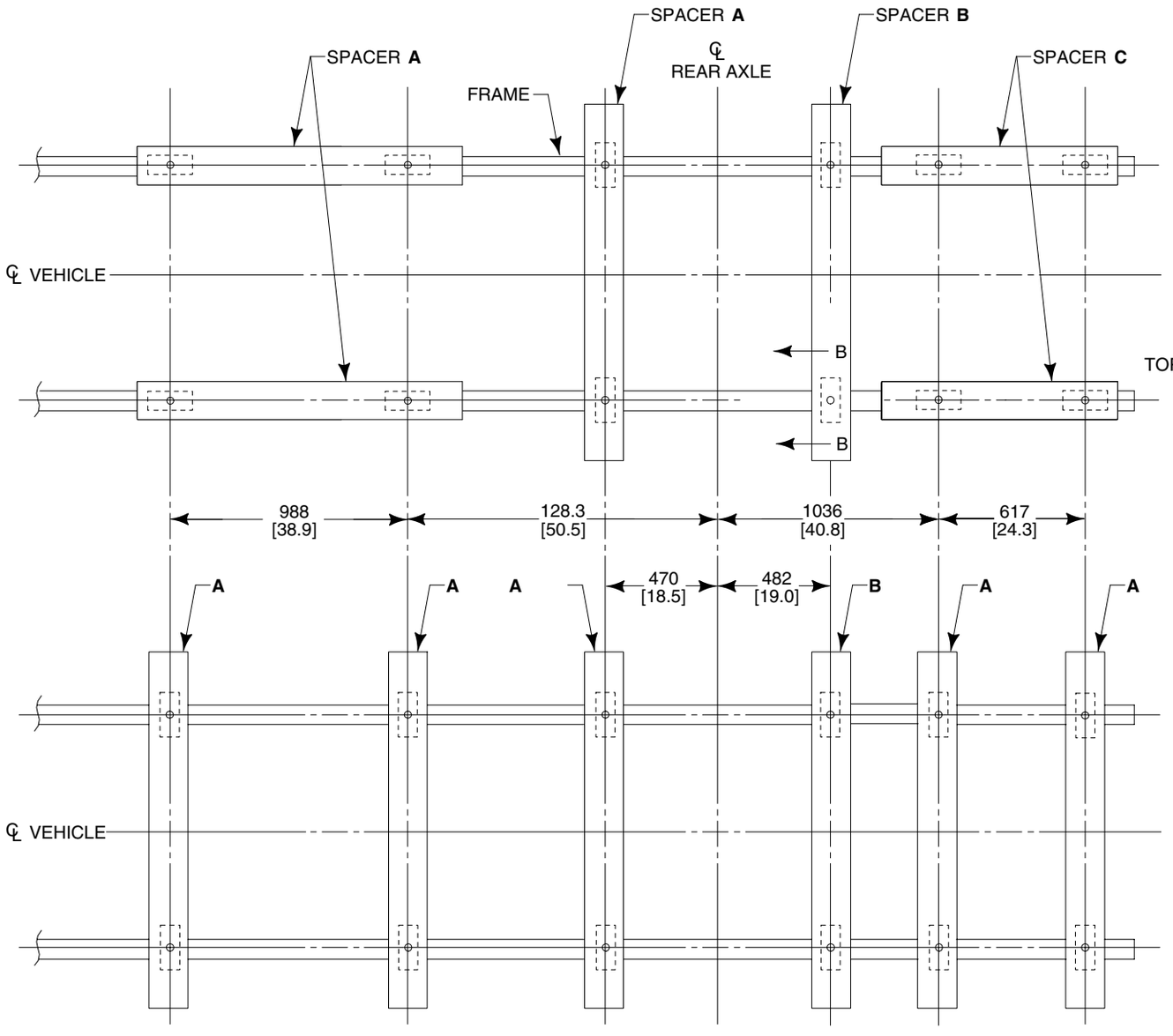

INCLUDES 6 LATERAL FRAME SPACERS WITH 12 BODY MOUNTS. USES SAME FRAME HOLES FOR LONGITUDINAL/LATERAL FRAME SPACER STANDARD SYSTEM.

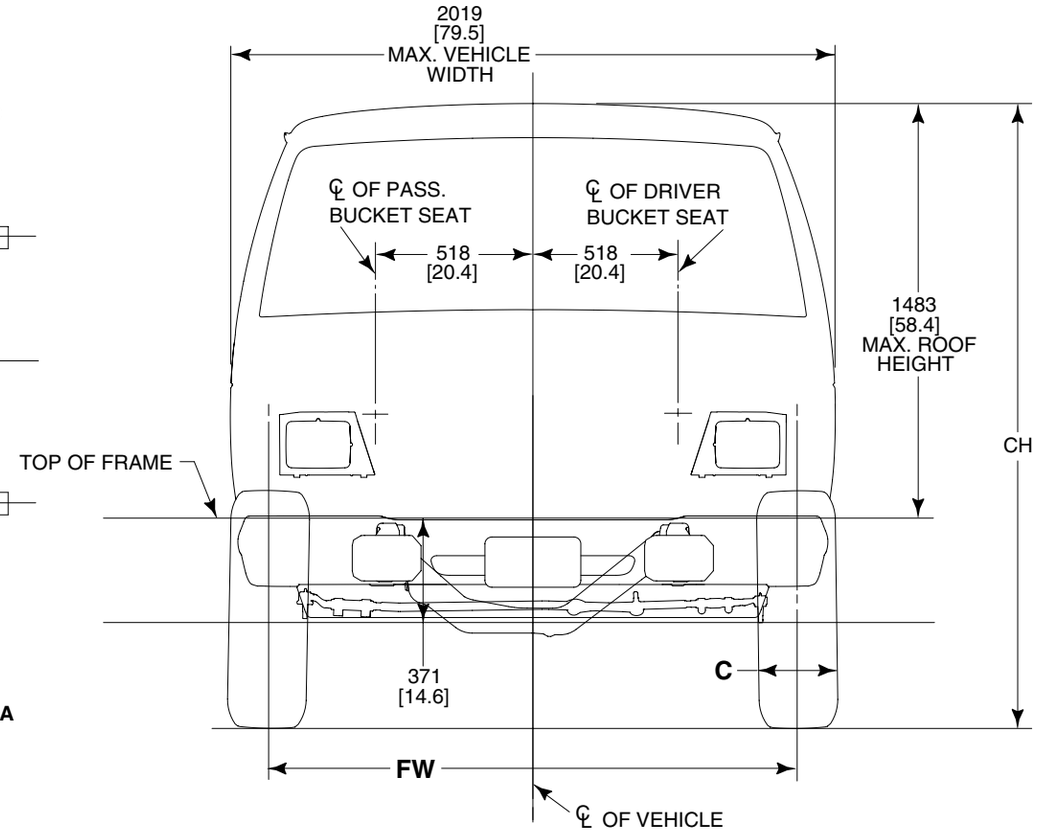

FRONT VIEW

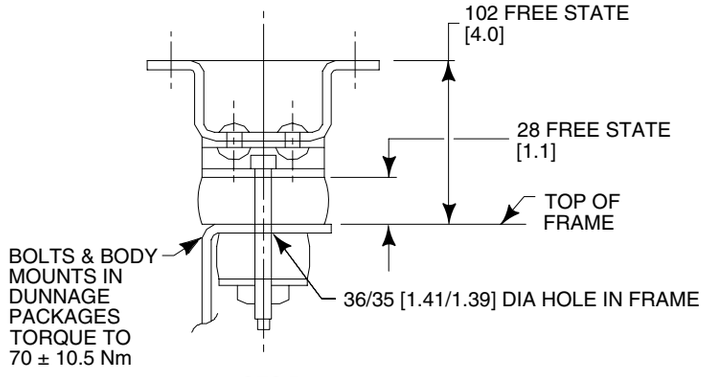

SEC B

BB0025

NOTES — [ ] DIMENSIONS ARE INCHES.
— FOR DIMENSIONS NOT SHOWN, SEE PAGE 113-117.
— FOR DETAILED SPACER INFORMATION, SEE PAGE 101.

E-350/450 SUPER DUTY CUTAWAY/CHASSIS CAB
176" WHEELBASE (DRW)

2003
MODEL YEAR

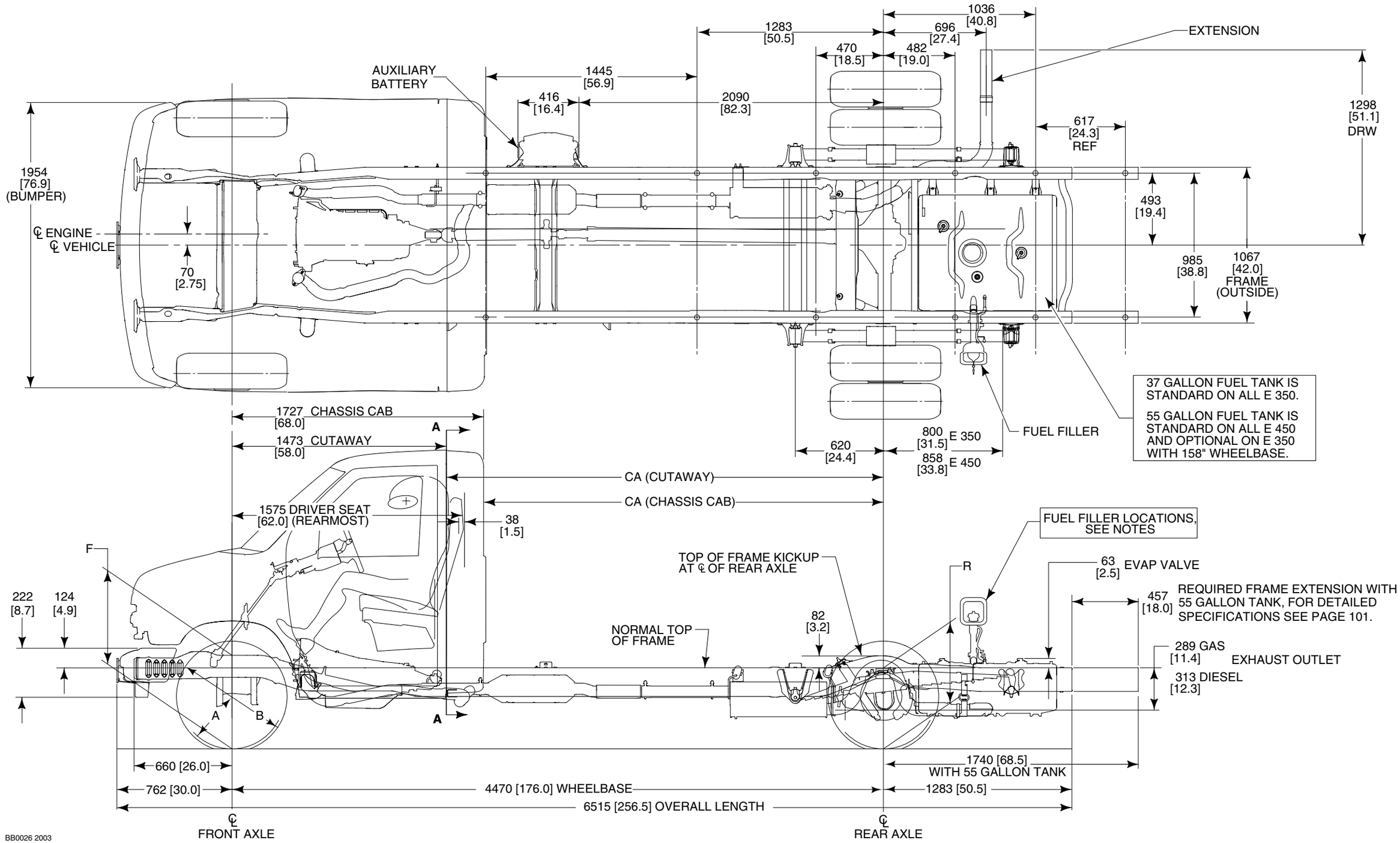

NOTES — [ ] DIMENSIONS ARE INCHES.
— FOR DIMENSIONS NOT SHOWN, SEE PAGE 113-117.
— FOR DETAILED SPACER INFORMATION, SEE PAGE 101.
— FOR FUEL FILLER LOCATIONS, SEE PAGE 119.
— FOR CA DIMENSION, SEE MODEL LINE UP.

E-350/450 SUPER DUTY CUTAWAY/CHASSIS CAB
176" WHEELBASE (DRW)

2003
MODEL YEAR

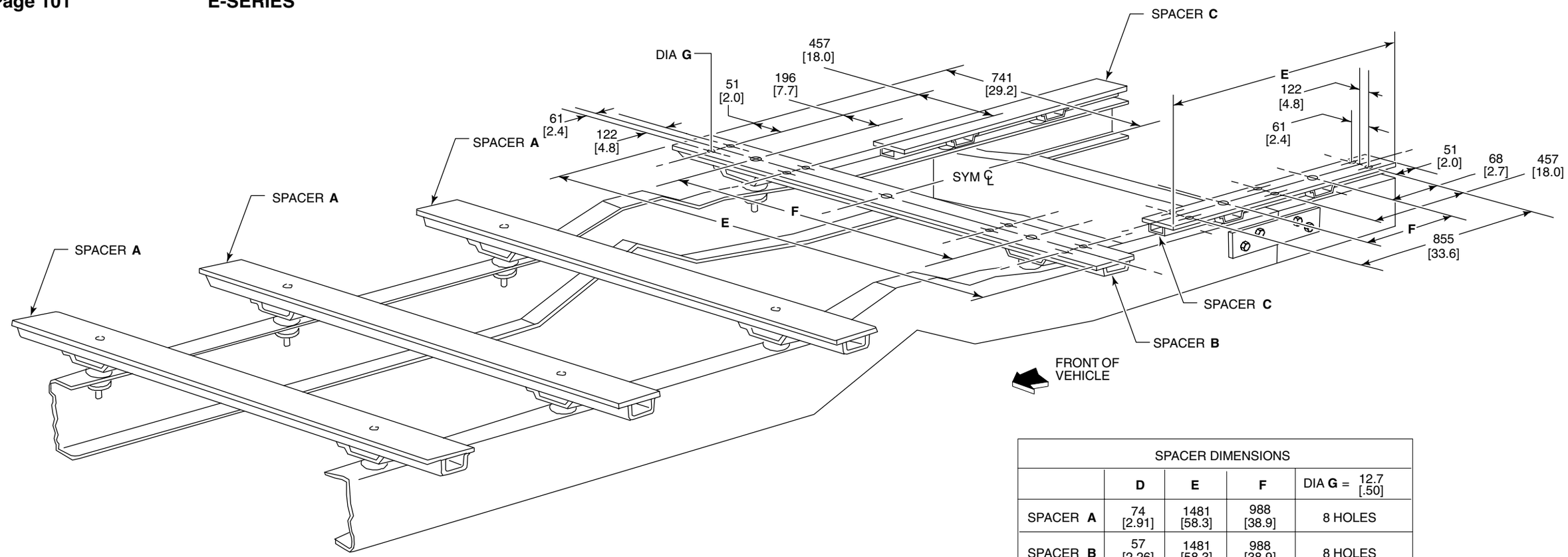

SPACER DIMENSIONS				
	D	**E**	**F**	DIA **G** = 12.7 [.50]
SPACER **A**	74 [2.91]	1481 [58.3]	988 [38.9]	8 HOLES
SPACER **B**	57 [2.26]	1481 [58.3]	988 [38.9]	8 HOLES
SPACER **C**	74 [2.91]	204 [37.7]	616 [24.25]	6 HOLES

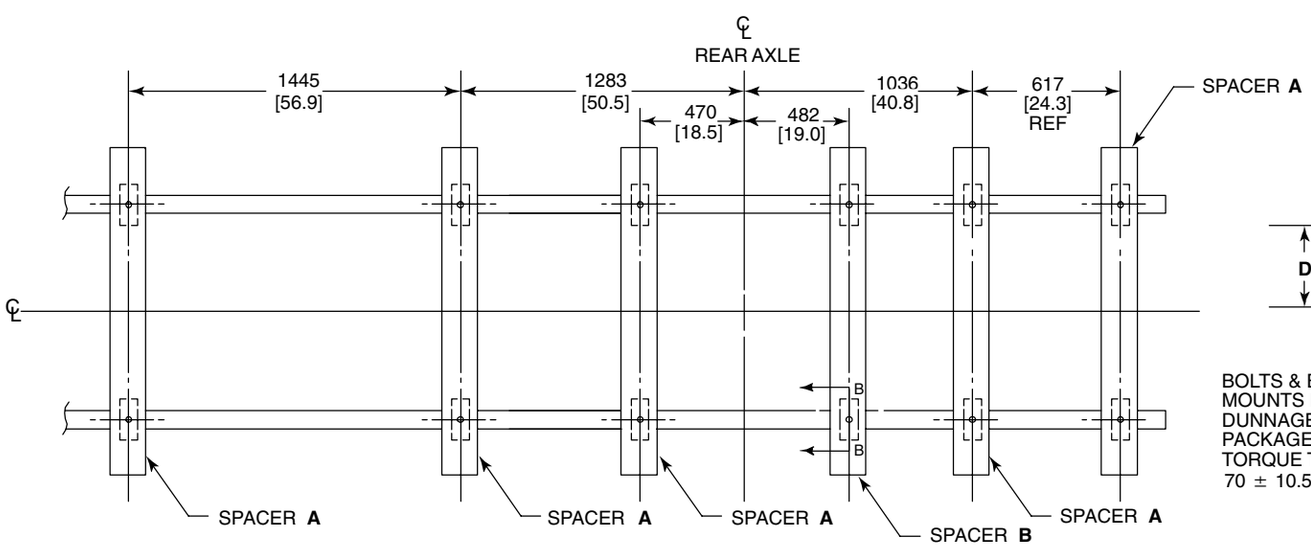

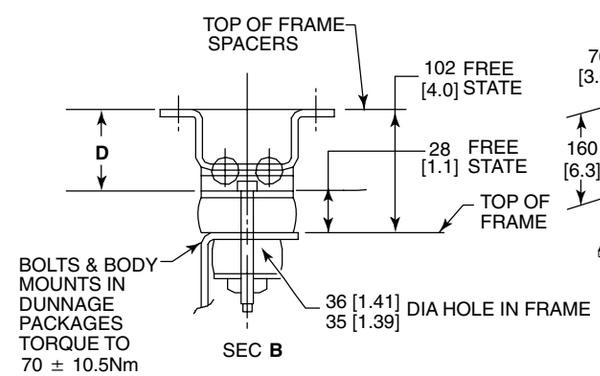

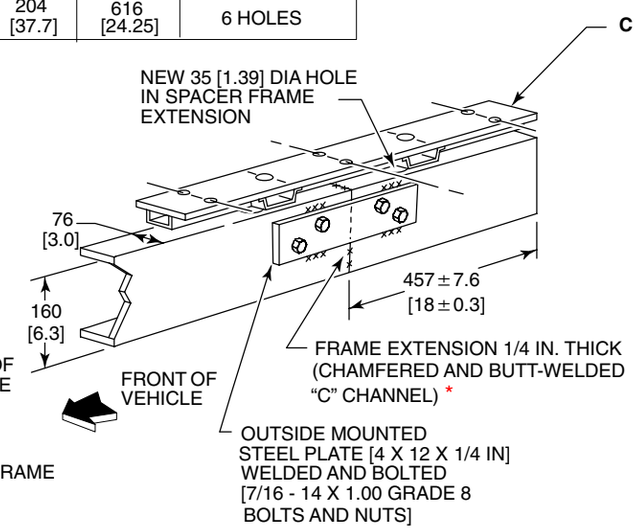

NOTE — [ ] DIMENSIONS ARE INCHES.

* FOR NGV VARIANT A "C" CHANNEL FRAME REINFORCEMENT IS REQUIRED ALONG WITH THE FRAME EXTENSION.

BB0661

DIMENSIONAL DATA
E-550 SUPER DUTY CUTAWAY/CHASSIS CAB
159.5" – 233.5" WHEELBASE (DRW)

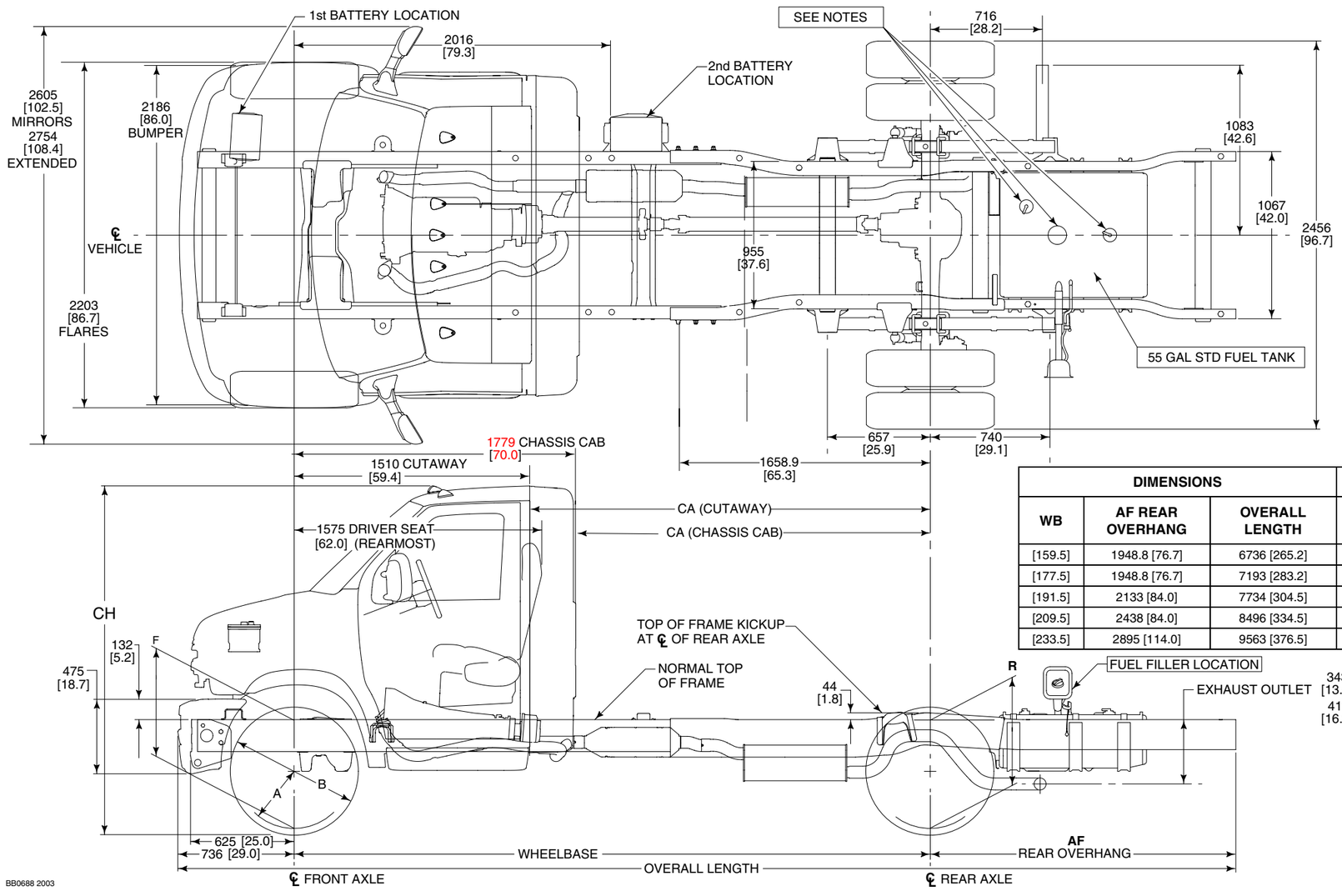

DIMENSIONS			CA	
WB	AF REAR OVERHANG	OVERALL LENGTH	CHASSIS CAB	CUTAWAY CAB
[159.5]	1948.8 [76.7]	6736 [265.2]	89.4	100.1
[177.5]	1948.8 [76.7]	7193 [283.2]	107.4	118.1
[191.5]	2133 [84.0]	7734 [304.5]	121.4	132.1
[209.5]	2438 [84.0]	8496 [334.5]	139.4	150.1
[233.5]	2895 [114.0]	9563 [376.5]	163.4	174.1

NOTES — [ ] DIMENSIONS ARE INCHES.
— **A, B, F, R, CH** DIMENSIONS, SEE PAGE 115-118.
— 25 MM CLEARANCE IS REQUIRED BETWEEN ALL FUEL TANK COMPONENTS AND SECOND UNIT BODY. CONTACT BODY BUILDERS ADVISORY SERVICE FOR INFORMATION.

E-550 SUPER DUTY CUTAWAY/CHASSIS CAB
159.5" WHEELBASE FRAME DATA
BODY PUCKS

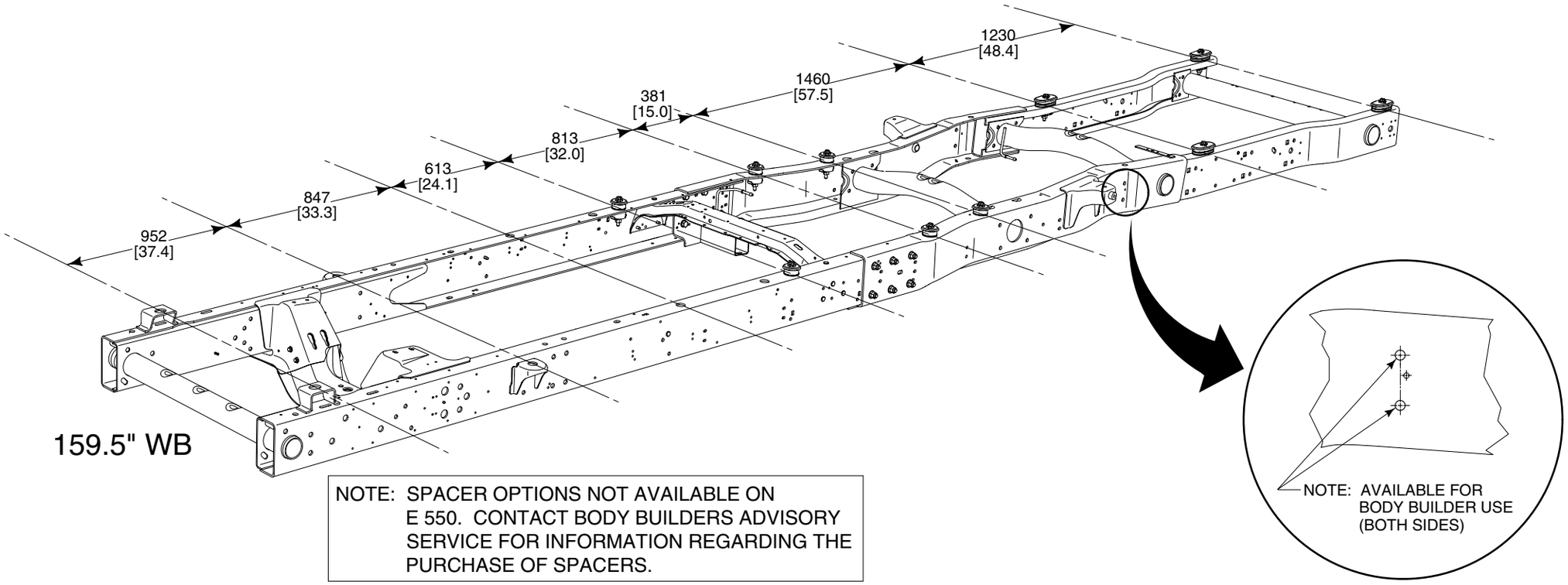

NOTE: SPACER OPTIONS NOT AVAILABLE ON E 550. CONTACT BODY BUILDERS ADVISORY SERVICE FOR INFORMATION REGARDING THE PURCHASE OF SPACERS.

BODY PUCKS (OPTIONAL)
SHIPPED IN DUNNAGE

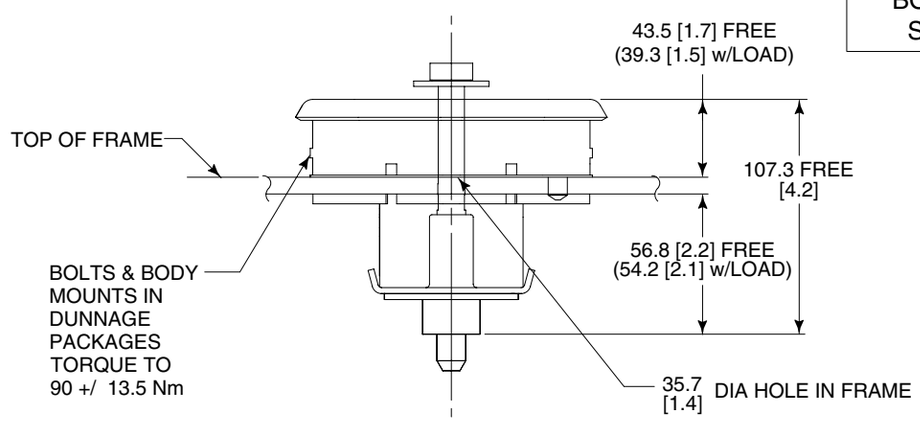

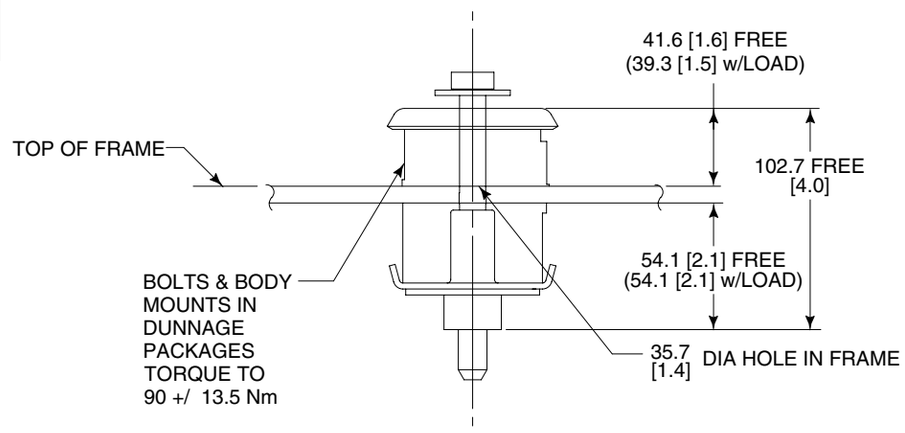

BB0679 2003

NOTES — [ ] DIMENSIONS ARE INCHES.
— **C, CH, FW** DIMENSIONS, SEE PAGE 115-118.

E-550 SUPER DUTY CUTAWAY/CHASSIS CAB
177.5″ – 191.5″ WHEELBASE
FRAME DATA

2003
MODEL YEAR

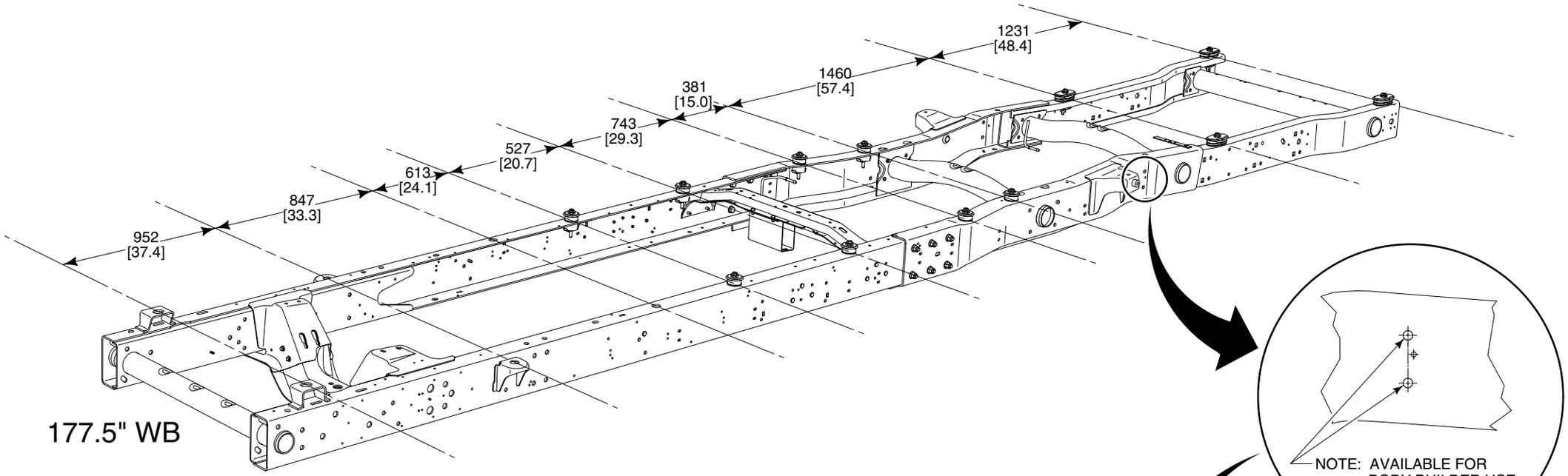

BB0680 2003

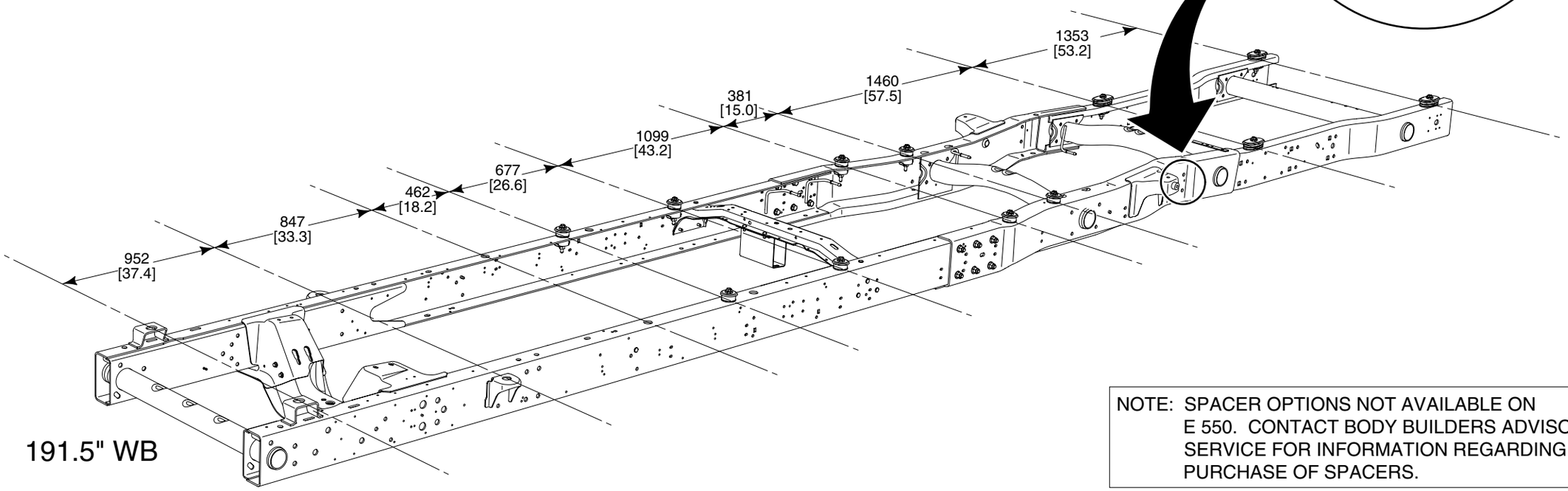

BB0681 2003

NOTE: SPACER OPTIONS NOT AVAILABLE ON E 550. CONTACT BODY BUILDERS ADVISORY SERVICE FOR INFORMATION REGARDING THE PURCHASE OF SPACERS.

NOTE — [ ] DIMENSIONS ARE INCHES.

E-550 SUPER DUTY CUTAWAY/CHASSIS CAB
209.5″ – 233.5″ WHEELBASE
FRAME DATA

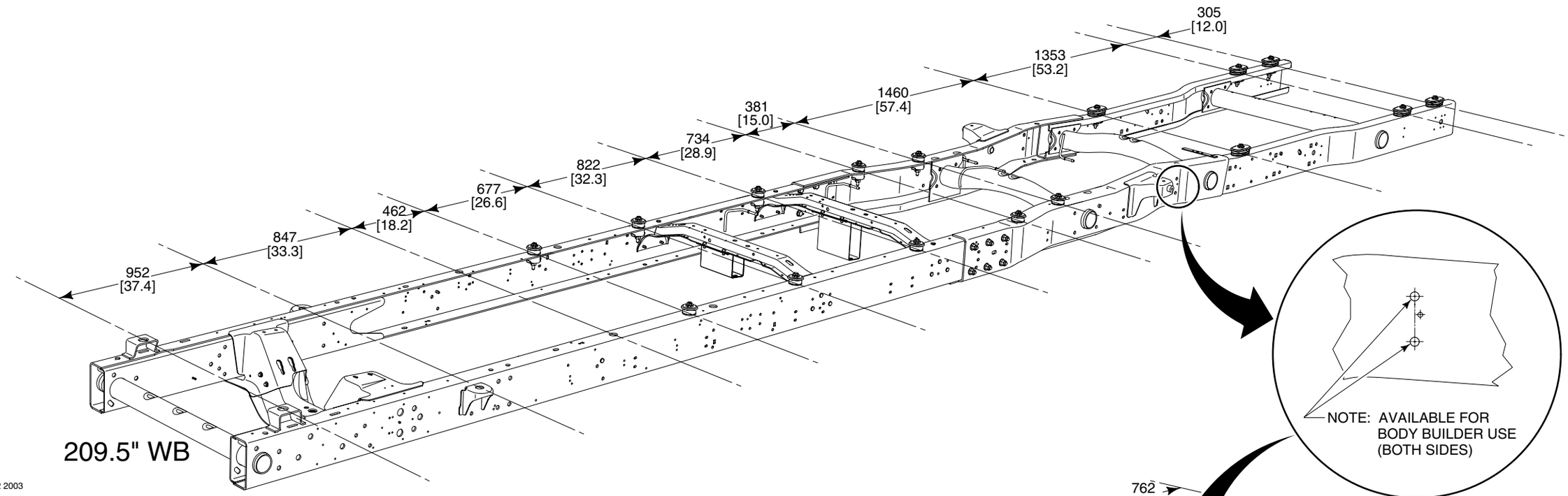

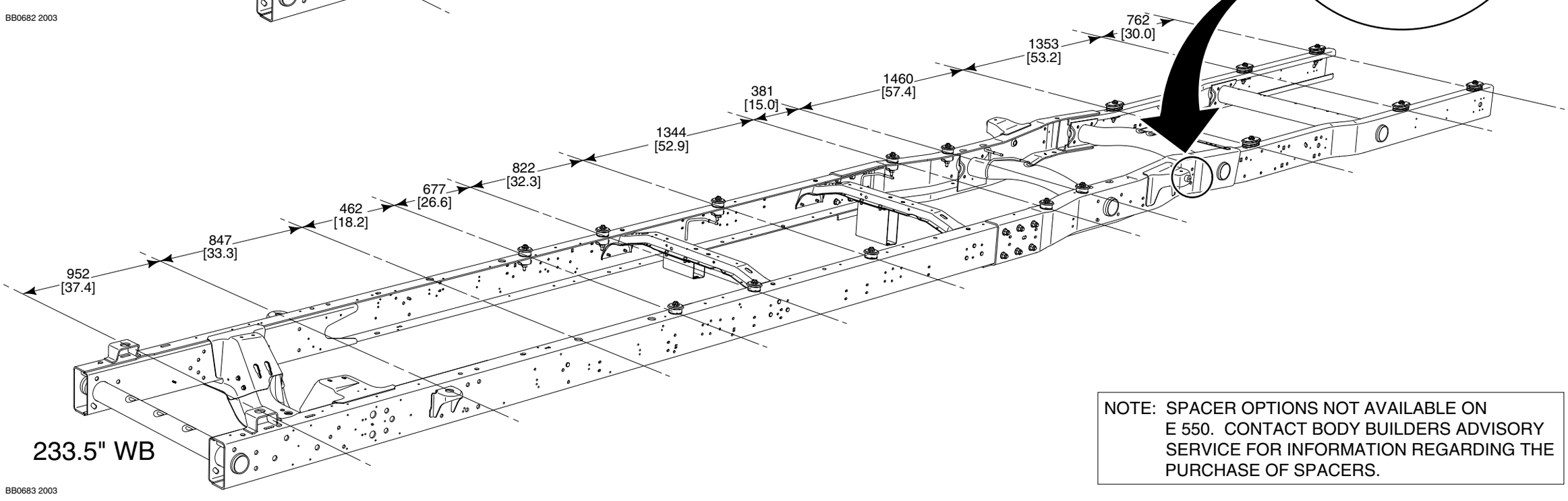

NOTE: SPACER OPTIONS NOT AVAILABLE ON E 550. CONTACT BODY BUILDERS ADVISORY SERVICE FOR INFORMATION REGARDING THE PURCHASE OF SPACERS.

NOTE — [ ] DIMENSIONS ARE INCHES.

E-350/450/550 SUPER DUTY CUTAWAY/CHASSIS CAB BODY “SECTION A”

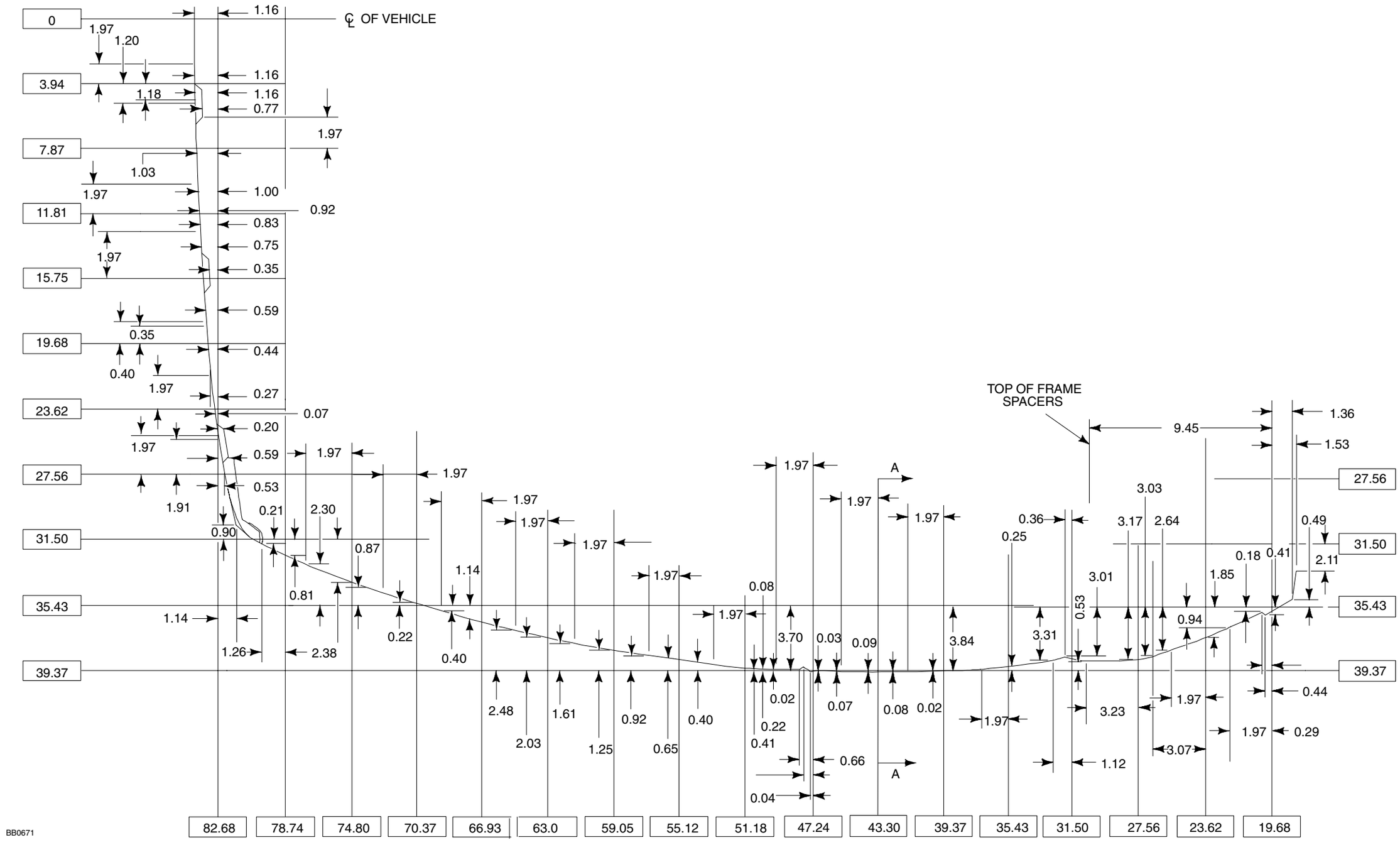

NOTE — [ ] DIMENSIONS ARE INCHES.

DIMENSIONAL DATA
E-350/450/550 SUPER DUTY CUTAWAY/CHASSIS CAB

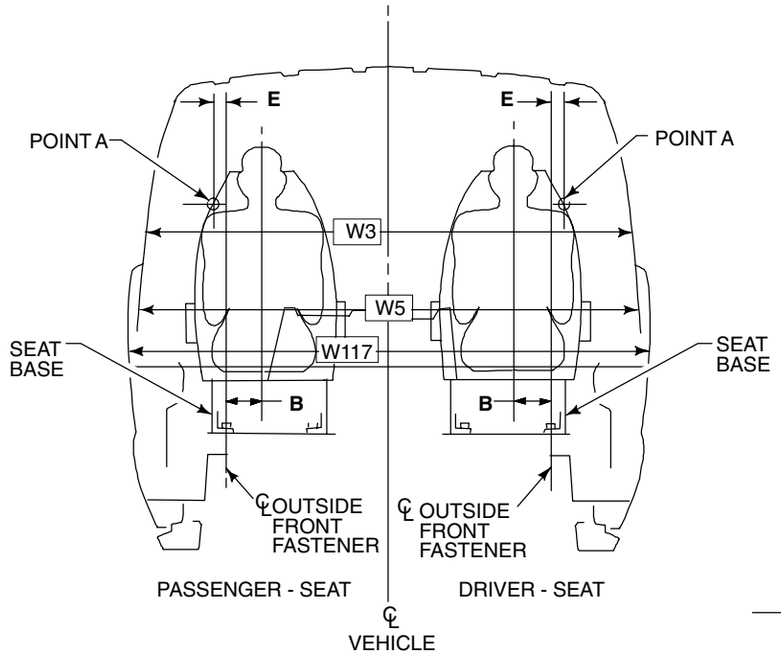

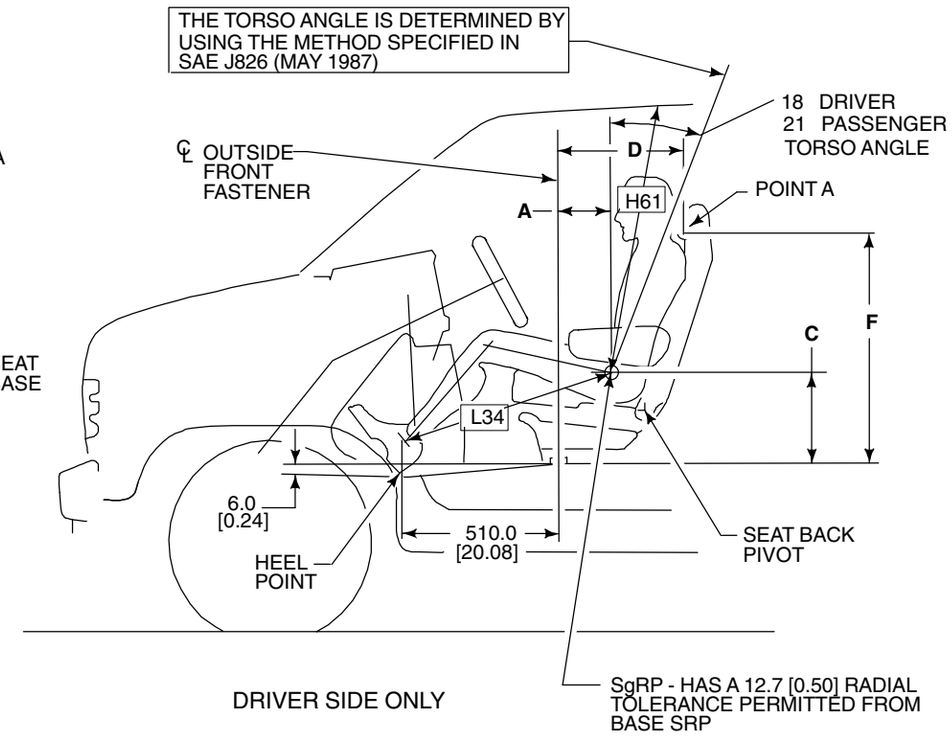

IMPORTANT:
THE DIMENSIONS IN THIS FIGURE REQUIRE THE VEHICLE TO BE AT DESIGN POSITION. E-SERIES VEHICLES AT DESIGN POSITION WILL BE LEVEL FRONT TO REAR, AND SIDE TO SIDE, ON THE UPPER SURFACE OF THE RIBBED FLOOR PANEL FROM THE B-PILLAR REARWARD.

BB0672

SRP INFORMATION (SEAT POSITION IS 10.0 mm [0.39] FORWARD OF REARMOST POSITION)				**POINT A (SEAT POSITION IS AT THE MIDPOINT OF AVAILABLE TRAVEL)**		
	A	**B**	**C**	**D**	**E**	**F**
DRIVER – SEAT	217.8 [8.57]	105.0 [4.13]	384.2 [15.13]	356.0 [14.01]	67.0 [2.64]	937.4 [36.90]
PASSENGER – SEAT	277.3 [10.92]	103.0 [4.06]	377.0 [14.84]	412.0 [16.22]	65.0 [2.56]	960.1 [37.80]

CODE	**DESCRIPTION**	
FRONT COMPARTMENT		
L34	MAXIMUM EFFECTIVE LEG ROOM – FRONT	1016 [40.0]
W3	SHOULDER ROOM – FRONT	1737 [68.4]
W5	HIP ROOM – FRONT	1666 [65.5]
W117	BODY WIDTH AT H-POINT	1999 [78.7]
H61	EFFECTIVE HEAD ROOM – FRONT	1069 [42.1]

NOTE — [ ] DIMENSIONS ARE INCHES.

E-250 SUPER DUTY STRIPPED CHASSIS
124" WHEELBASE (SRW)

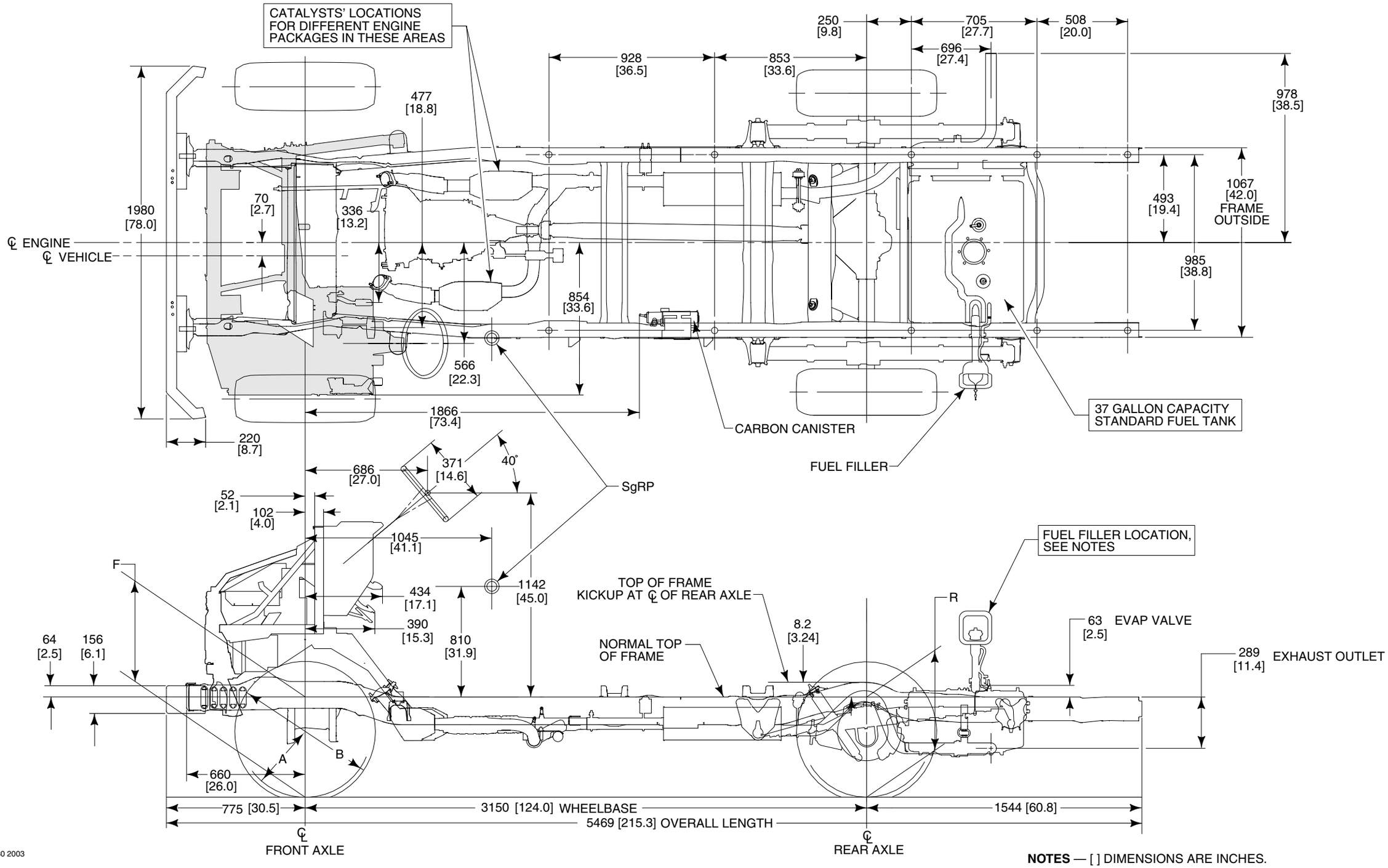

NOTES — [ ] DIMENSIONS ARE INCHES.
— FOR DIMENSIONS NOT SHOWN, SEE PAGE 115-116.
— FOR FUEL FILLER LOCATIONS, SEE PAGE 119.

E-350 SUPER DUTY STRIPPED CHASSIS
138" WHEELBASE (SRW/DRW)

2003
MODEL YEAR

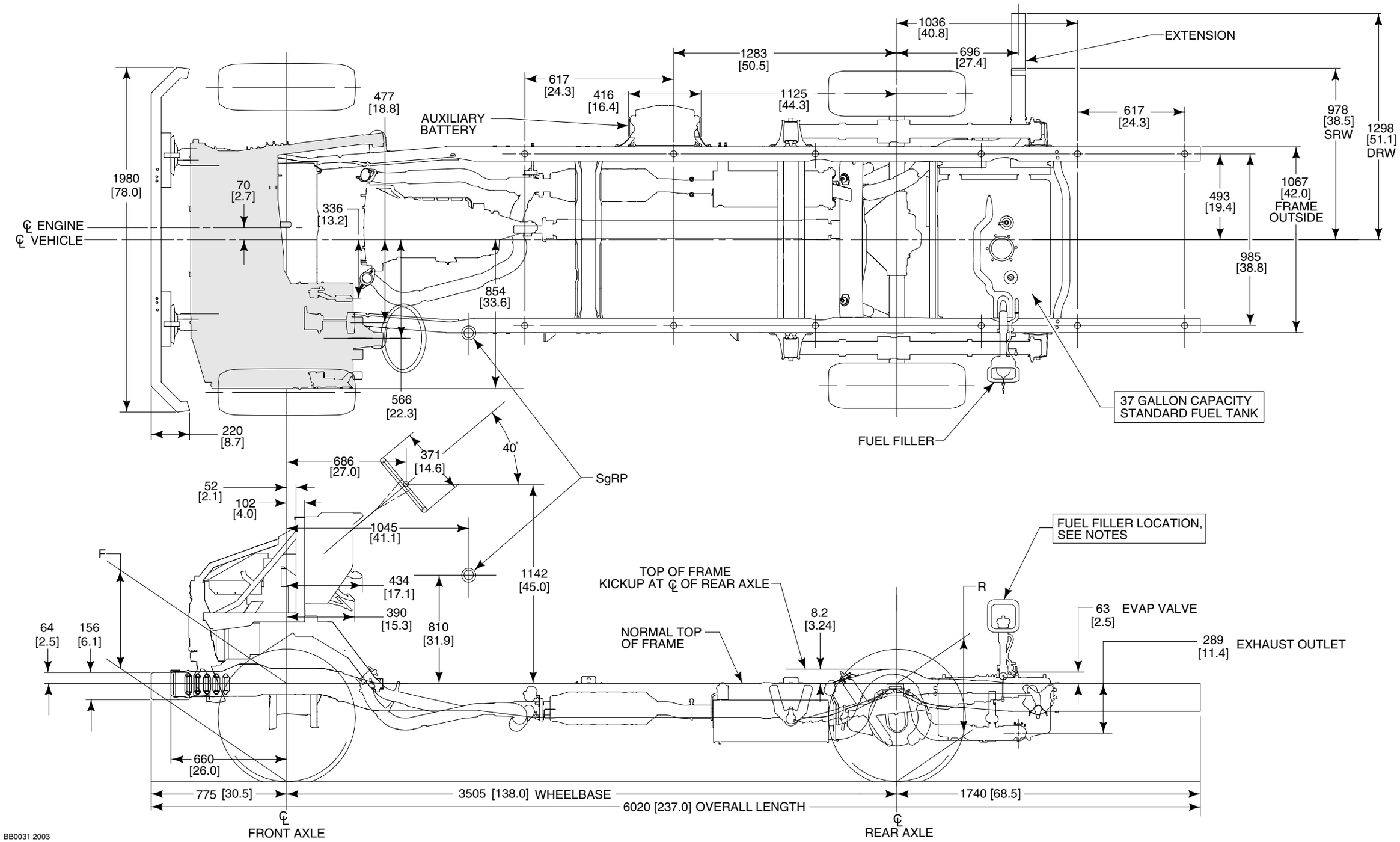

NOTES — [ ] DIMENSIONS ARE INCHES.
— FOR FUEL FILLER LOCATIONS, SEE PAGE 119.
— FOR DIMENSIONS NOT SHOWN, SEE PAGE 115-116.

E-350/450 SUPER DUTY STRIPPED CHASSIS
158" WHEELBASE (DRW)

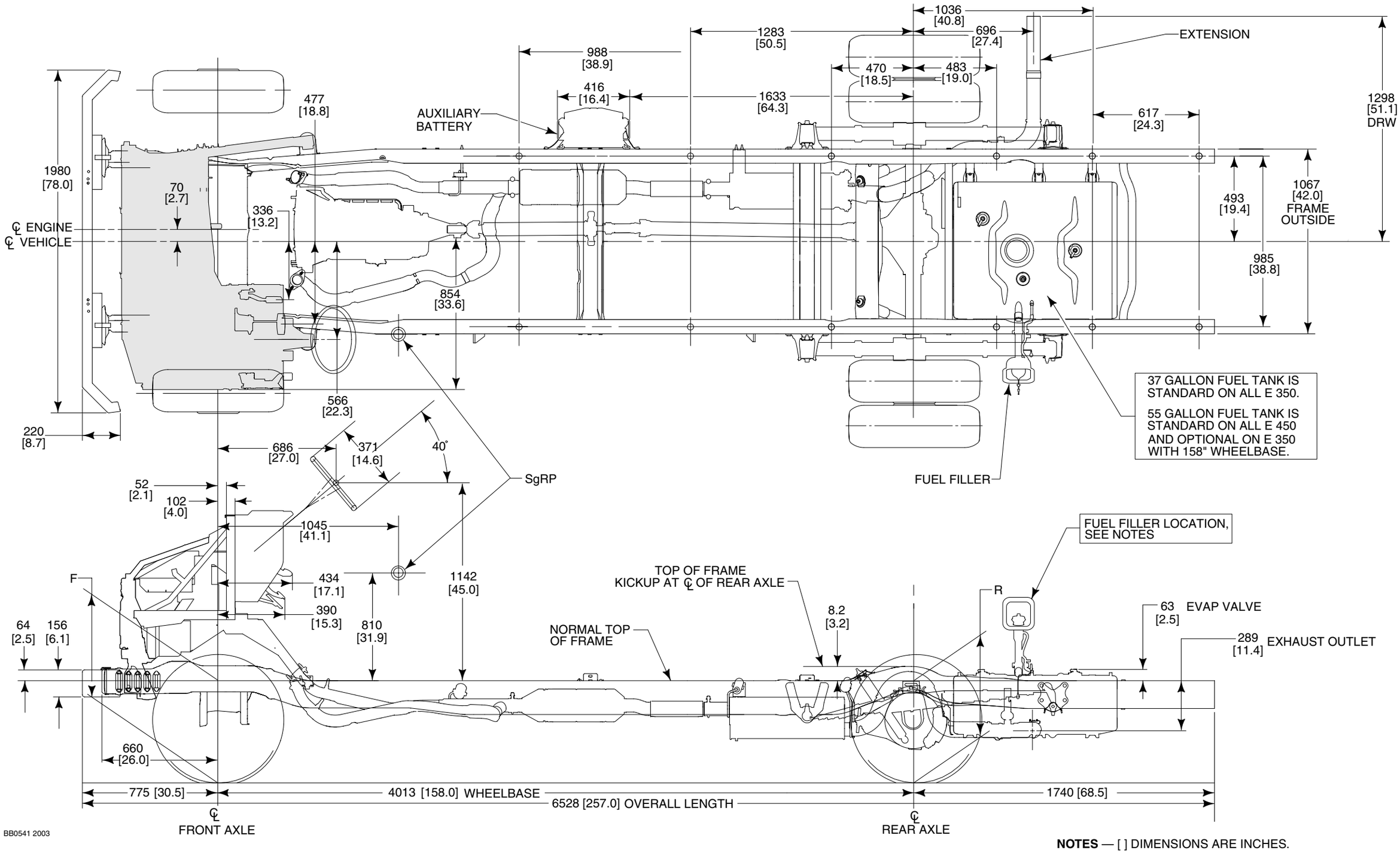

NOTES — [ ] DIMENSIONS ARE INCHES.
— FOR FUEL FILLER LOCATIONS, SEE PAGE 119.
— FOR DIMENSIONS NOT SHOWN, SEE PAGE 115-116.

E-350/450 SUPER DUTY STRIPPED CHASSIS
176" WHEELBASE (DRW)

2003
MODEL YEAR
Rev 02-10-03

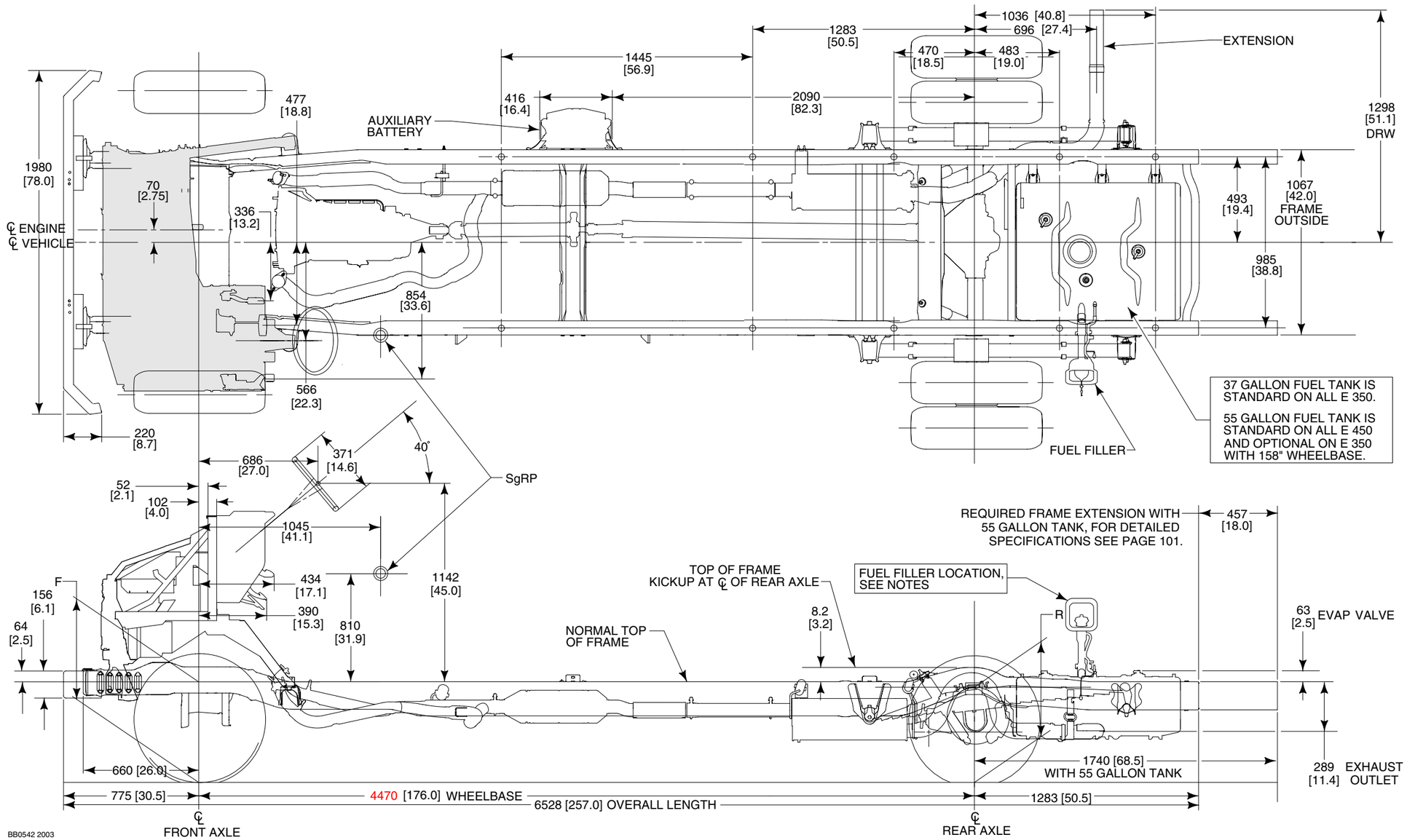

NOTES — [ ] DIMENSIONS ARE INCHES.
— FOR DIMENSIONS NOT SHOWN, SEE PAGE 115-116.
— FOR FUEL FILLER LOCATIONS, SEE PAGE 119.

E-450 SUPER DUTY STRIPPED CHASSIS
158"/176" WHEELBASE (DRW)
PARKING BRAKE CABLE ATTACHMENT

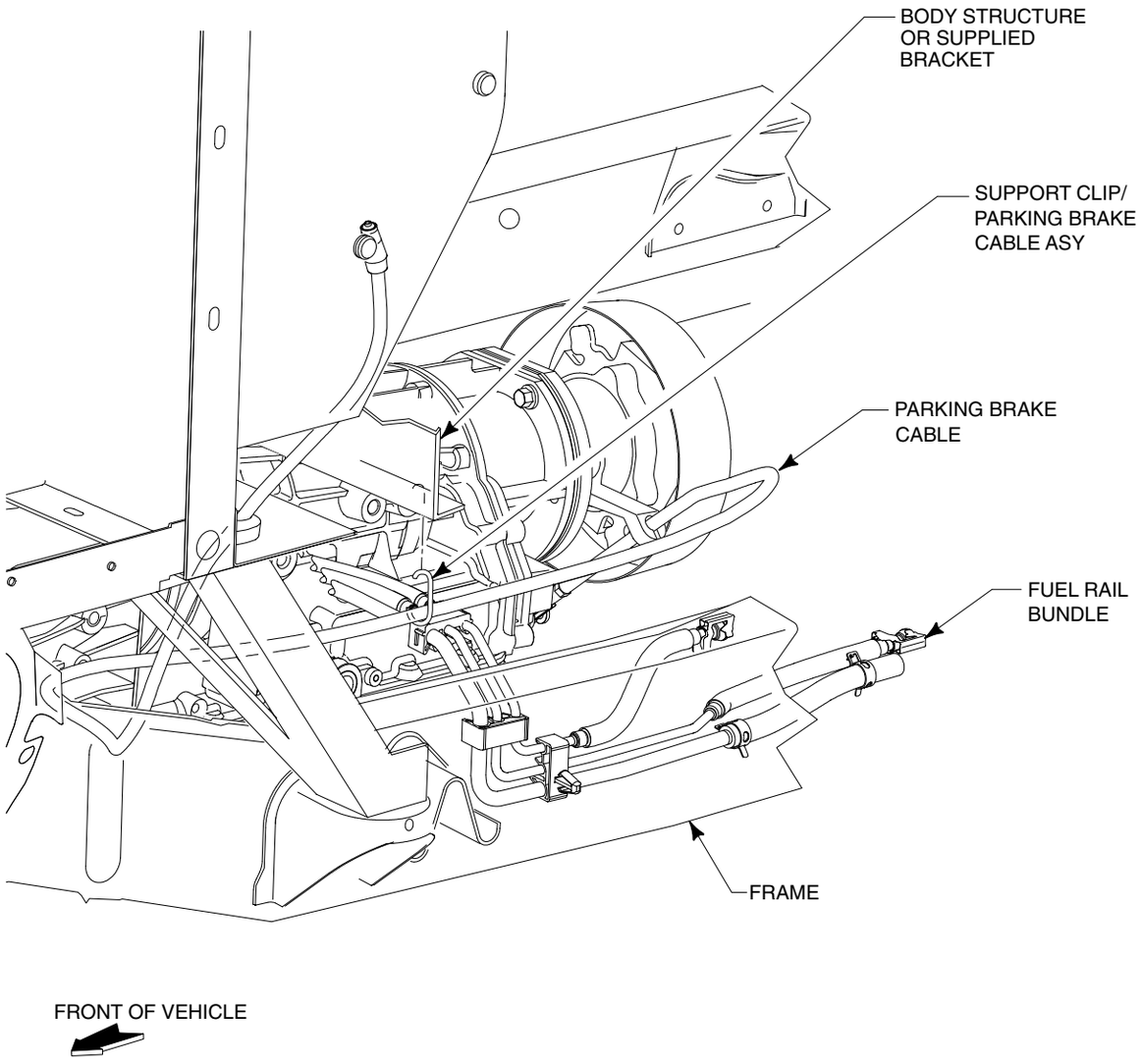

RECOMMENDED PARKING BRAKE CABLE ATTACHMENT TO BODY

1. REMOVE TIE STRAP SECURING PARKING BRAKE CABLE TO FUEL BUNDLE.
2. USING CLIP SUPPLIED ON PARKING BRAKE CABLE, ATTACH CABLE TO BODY STRUCTURE OR BRACKET SUPPLIED BY BODY BUILDER IN AREA SHOWN.
3. TO ASSURE PROPER PARKING BRAKE FUNCTION THE CABLE SHOULD NOT DEVIATE FROM CURRENT PATH BY MORE THAN 2″ SIDE TO SIDE.
4. NO PAINT IS ALLOWED ON CABLE ATTACHMENT ENDS OR ON PARKING BRAKE PEDAL ASSEMBLY.

E-350/450 SUPER DUTY CUTAWAY/CHASSIS CAB/ STRIPPED CHASSIS ALL WHEELBASE (SRW/DRW)

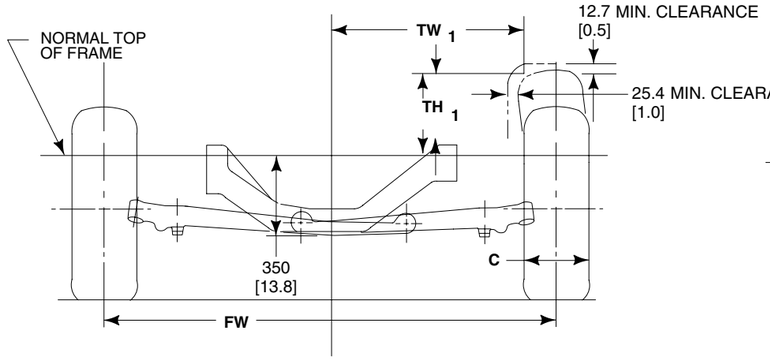

FRONT SUSPENSION FRONT VIEW

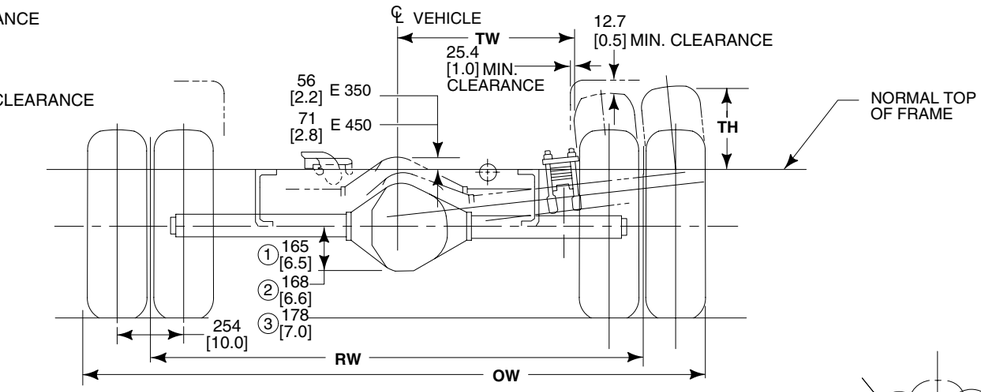

REAR SUSPENSION (DRW) REAR VIEW

① 7800 LB AXLE USED AT 10,000 11,000 LB GVWR FOR RPO APPLICATIONS

② 8000 LB AXLE DSO USE ONLY

③ 9450 LB AXLE USED AT 14,050 LB GVWR FOR E 450

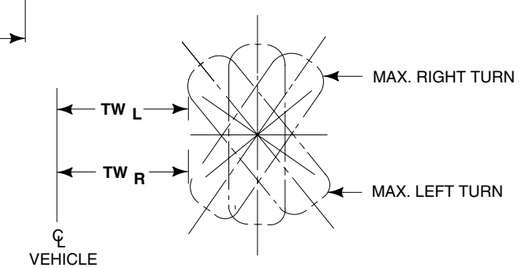

PLAN VIEW LEFT FRONT TIRE

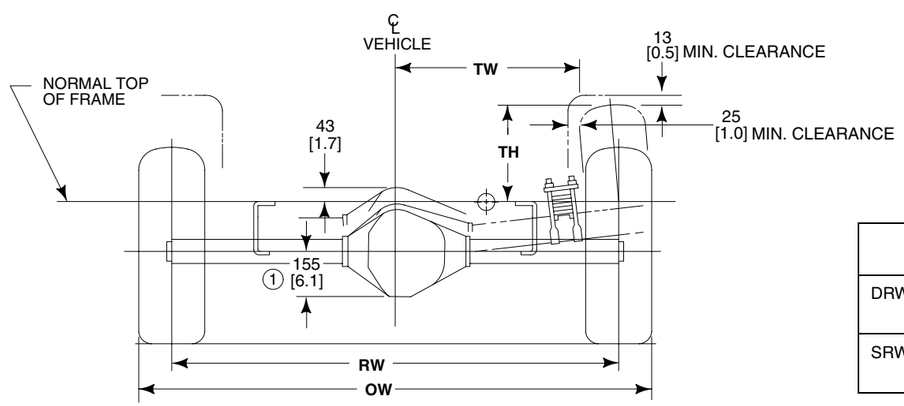

① 7800 LB AXLE USED AT 10,000 11,000 LB GVWR FOR ALL RPO APPLICATIONS

REAR SUSPENSION (SRW) REAR VIEW

TW = DISTANCE FROM ℄ OF VEHICLE TO SIDE OF TIRE IN MODIFIED JOUNCE.
TH = DISTANCE FROM TOP OF FRAME TO TOP OF TIRE IN MODIFIED JOUNCE.

	TW_1	TH_1	TW_L	TW_R
DRW LT225/75R16E	655 [25.8]	302 [11.9]	549 [21.6]	521 [20.5]
SRW LT245/75R16E	655 [25.8]	320 [12.6]	549 [21.6]	521 [20.5]

BB0029 2003

NOTES — [ ] DIMENSIONS ARE INCHES.
— REFER TO PAGE 101 FOR DETAIL INFORMATION ON FRAME EXTENSION METHOD.
— FOR DIMENSIONS NOT SHOWN, SEE PAGE 117.

E-550 SUPER DUTY CUTAWAY/CHASSIS CAB
ALL WHEELBASE (DRW)

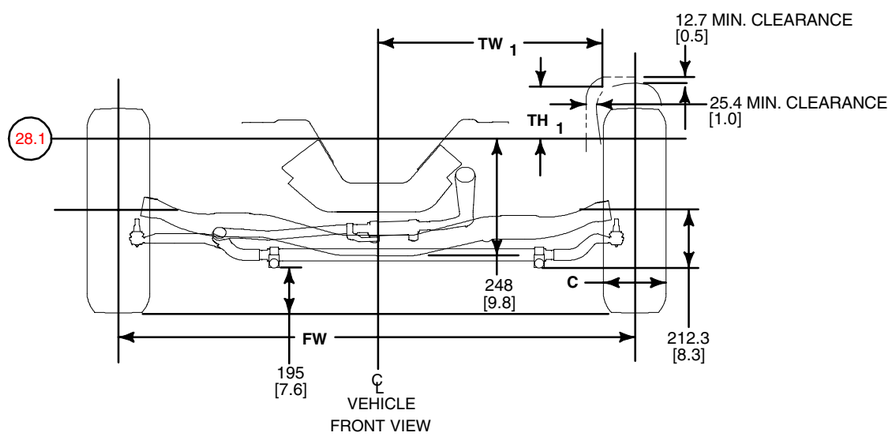

FRONT VIEW

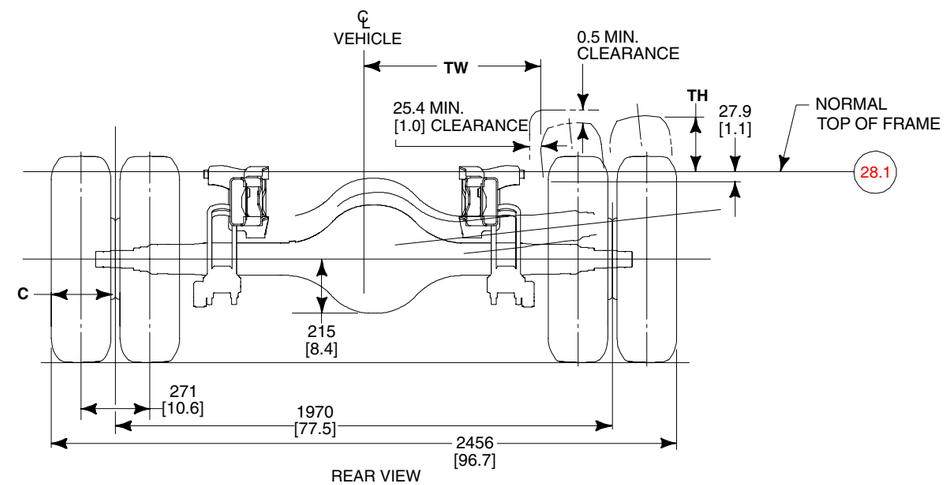

REAR VIEW

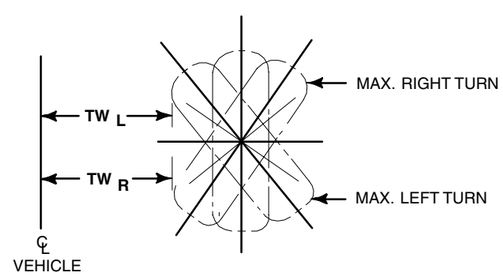

PLAN VIEW
LEFT FRONT TIRE

	TW 1	TH 1	TW L	TW R
225/70R19.5F	838 [33.0]	213 [8.4]	640 [25.2]	668 [26.3]

BB0685

TW = DISTANCE FROM ℄ OF VEHICLE TO SIDE OF TIRE IN MODIFIED JOUNCE.

TH = DISTANCE FROM TOP OF FRAME TO TOP OF TIRE IN MODIFIED JOUNCE.

NOTES — [ ] DIMENSIONS ARE INCHES.
— **C, FW, TW, TH** DIMENSIONS, SEE PAGE 118.

VEHICLE HEIGHT DATA
E-SERIES SUPER DUTY
CUTAWAY/CHASSIS CAB/STRIPPED CHASSIS

2003
MODEL YEAR
Rev 09-30-02

MODEL	WB inches	GVWR pounds	MINIMUM TIRE	FRONT GAWR MIN/MAX pounds	COMBINED FRONT SPRING CAPACITY RATE pounds	F HEIGHT AT FRONT AXLE (1)		REAR GAWR MIN/MAX pounds	COMBINED REAR SPRING CAPACITY RATE pounds	R HEIGHT AT REAR AXLE (1)		CH OVERALL HEIGHT OF VEHICLE (STANDARD SPRINGS)(1) mm [in]	
						BASE CURB WEIGHT mm [in]	LOADED mm [in]			BASE CURB WEIGHT mm [in]	LOADED mm [in]		
					STD SPRING	STD SPRING	STD SPRING		STD SPRING	STD SPRING	STD SPRING	CURB	LOADED
CUTAWAY													
E-350	138	9600(2)	LT245/75R16E	3700/4600(3)	3700/4600(3)	574 [22.6]	545 [21.5]	6084	7810	666 [26.2]	598 [23.4]	2045 [80.5]	1981 [78.0]
		10,700	LT225/75R16D	3550/4600(3)	3550/4600(3)	556 [21.9]	528 [20.8]	7500	7810	648 [25.5]	580 [22.8]	2078 [81.8]	2019 [79.5]
		11,500(4)	LT225/75R16D	4050	4050	556 [21.9]	528 [20.8]	7800	7810	648 [25.5]	580 [22.8]	2078 [81.8]	2019 [79.5]
	158	11,500	LT225/75R16D	4050/4600(3)	4050/4600(3)	556 [21.9]	519 [20.4]	7800	7810	648 [25.5]	580 [22.8]	2108 [83.0]	2019 [79.5]
	176	11,500	LT225/75R16D	4050/4600(3)	4050/4600(3)	556 [21.9]	519 [20.4]	7800	7810	648 [25.5]	580 [22.8]	2103 [82.8]	2019 [79.5]
E-450 SD	158	14,050	LT225/75R16E	4400/4600	4400/4600	557 [21.9]	520 [20.5]	9450	9450	652 [25.7]	575 [22.6]	2108 [83.0]	2019 [79.5]
	176	14,050	LT225/75R16E	4600	4600	557 [21.9]	520 [20.5]	9450	9450	652 [25.7]	575 [22.6]	2108 [83.0]	2019 [79.5]
E-550 SD	159.5	17,500	LT225/70R19.5F	6000	6000	772 [30.3]	703 [27.6]	11,500	11,500	817.8 [32.2]	725 [28.5]	2270 [89.3]	2201 [86.6]
		19,000	LT225/70R19.5F	6000	6000	772 [30.3]	703 [27.6]	13,000	13,000	817.8 [32.2]	725 [28.5]	2270 [89.3]	2201 [86.6]
	177.5	17,500	LT225/70R19.5F	6000	6000	772 [30.3]	703 [27.6]	11,500	11,500	817.8 [32.2]	725 [28.5]	2270 [89.3]	2201 [86.6]
		19,000	LT225/70R19.5F	6000	6000	772 [30.3]	703 [27.6]	13,000	13,000	817.8 [32.2]	725 [28.5]	2270 [89.3]	2201 [86.6]
	191.5	17,500	LT225/70R19.5F	6000	6000	772 [30.3]	703 [27.6]	11,500	11,500	817.8 [32.2]	725 [28.5]	2270 [89.3]	2201 [86.6]
		19,000	LT225/70R19.5F	6000	6000	772 [30.3]	703 [27.6]	13,000	13,000	817.8 [32.2]	725 [28.5]	2270 [89.3]	2201 [86.6]
	209.5	17,500	LT225/70R19.5F	6000	6000	772 [30.3]	703 [27.6]	11,500	11,500	817.8 [32.2]	725 [28.5]	2270 [89.3]	2201 [86.6]
		19,000	LT225/70R19.5F	6000	6000	772 [30.3]	703 [27.6]	13,000	13,000	817.8 [32.2]	725 [28.5]	2270 [89.3]	2201 [86.6]
	233.5	17,500	LT225/70R19.5F	6000	6000	772 [30.3]	703 [27.6]	11,500	11,500	817.8 [32.2]	725 [28.5]	2270 [89.3]	2201 [86.6]
		19,000	LT225/70R19.5F	6000	6000	772 [30.3]	703 [27.6]	13,000	13,000	817.8 [32.2]	725 [28.5]	2270 [89.3]	2201 [86.6]

(1) The Height Data shown represents dimensions of a nominal vehicle with no options. Actual height may vary due to production tolerances.
(2) Single Rear Wheels.
(3) 4600 lb. Standard with Ambulance Prep Package.
(4) School Bus Prep Package.

NOTE — [ ] DIMENSIONS ARE INCHES.

VEHICLE HEIGHT DATA
E-SERIES SUPER DUTY
CUTAWAY/CHASSIS CAB/STRIPPED CHASSIS

MODEL	WB inches	GVWR pounds	MINIMUM TIRE	FRONT GAWR MIN/MAX pounds	COMBINED FRONT SPRING CAPACITY RATE pounds	F HEIGHT AT FRONT AXLE (1)		REAR GAWR MIN/MAX pounds	COMBINED REAR SPRING CAPACITY RATE pounds	R HEIGHT AT REAR AXLE (1)		CH OVERALL HEIGHT OF VEHICLE (STANDARD SPRINGS)(1) mm [in]	
						BASE CURB WEIGHT mm [in]	LOADED mm [in]			BASE CURB WEIGHT mm [in]	LOADED mm [in]		
					STD SPRING	STD SPRING	STD SPRING		STD SPRING	STD SPRING	STD SPRING	CURB	LOADED
CHASSIS CAB													
E-350 SD	138	10,700	LT225/75R16D	3550/4400	3550/4400	556 [21.9]	528 [20.8]	7800	7810	648 [25.5]	580 [22.8]	2078 [81.8]	2019 [79.5]
	158	11,500	LT225/75R16D	4050/4600	4050/4600	556 [21.9]	519 [20.4]	7800	7810	648 [25.5]	580 [22.8]	2108 [83.0]	2019 [79.5]
	176	11,500	LT225/75R16D	4050/4600	4050/4600	556 [21.9]	519 [20.4]	7800	7810	648 [25.5]	580 [22.8]	2103 [82.8]	2019 [79.5]
E-450SD	158	14,050	LT225/75R16E	4400/4600	4400/4600	557 [21.9]	520 [20.5]	9450	9450	652 [25.7]	575 [22.6]	2108 [83.0]	2019 [79.5]
	176	14,050	LT225/75R16E	4600	4600	557 [21.9]	520 [20.5]	9450	9450	652 [25.7]	575 [22.6]	2108 [83.0]	2019 [79.5]
E-550SD	159.5	17,500	LT225/70R19.5F	6000	6000	772 [30.3]	703 [27.6]	11,500	11,500	817.8 [32.2]	725 [28.5]	2270 [89.3]	2201 [86.6]
		19,000	LT225/70R19.5F	6000	6000	772 [30.3]	703 [27.6]	13,000	13,000	817.8 [32.2]	725 [28.5]	2270 [89.3]	2201 [86.6]
	177.5	17,500	LT225/70R19.5F	6000	6000	772 [30.3]	703 [27.6]	11,500	11,500	817.8 [32.2]	725 [28.5]	2270 [89.3]	2201 [86.6]
		19,000	LT225/70R19.5F	6000	6000	772 [30.3]	703 [27.6]	13,000	13,000	817.8 [32.2]	725 [28.5]	2270 [89.3]	2201 [86.6]
	191.5	17,500	LT225/70R19.5F	6000	6000	772 [30.3]	703 [27.6]	11,500	11,500	817.8 [32.2]	725 [28.5]	2270 [89.3]	2201 [86.6]
		19,000	LT225/70R19.5F	6000	6000	772 [30.3]	703 [27.6]	13,000	13,000	817.8 [32.2]	725 [28.5]	2270 [89.3]	2201 [86.6]
	209.5	17,500	LT225/70R19.5F	6000	6000	772 [30.3]	703 [27.6]	11,500	11,500	817.8 [32.2]	725 [28.5]	2270 [89.3]	2201 [86.6]
		19,000	LT225/70R19.5F	6000	6000	772 [30.3]	703 [27.6]	13,000	13,000	817.8 [32.2]	725 [28.5]	2270 [89.3]	2201 [86.6]
	233.5	17,500	LT225/70R19.5F	6000	6000	772 [30.3]	703 [27.6]	11,500	11,500	817.8 [32.2]	725 [28.5]	2270 [89.3]	2201 [86.6]
		19,000	LT225/70R19.5F	6000	6000	772 [30.3]	703 [27.6]	13,000	13,000	817.8 [32.2]	725 [28.5]	2270 [89.3]	2201 [86.6]
STRIPPED CHASSIS													
E-250 SD	124	8450(2)	LT225/75R16D	3550/3700	3550/3770	—	518 [20.4]	5360	5545	—	526 [20.7]	—	—
		8600(2)	LT225/75R16D	3550/3580	3550/3770	—	518 [20.4]	5360	5545	—	527 [20.7]	—	—
E-350 SD	138	9600(2)	LT245/75R16E	3550/3900	3550/3900	—	545 [21.5]	6084	7810	—	598 [23.4]	—	—
		10,000	LT225/75R16D	3700/3900	3700/3900	—	528 [20.8]	7800	7810	—	580 [22.8]	—	—
	158	9600(2)	LT245/75R16E	3700/3900	3700/3900	—	545 [21.5]	6084	7810	—	598 [23.4]	—	—
		10,000	LT225/75R16E	3700/3900	3700/3900	—	519 [20.4]	7800	7810	—	580 [22.8]	—	—
		11,000	LT225/75R16E	3700/3900	3700/3900	—	519 [20.4]	7000	7810	—	580 [22.8]	—	—
	176	10,000	LT225/75R16E	3800/4050	3800/4050	—	519 [20.4]	7200	7810	—	580 [22.8]	—	—
		11,000	LT225/75R16E	4050/4400	4050/4400	—	519 [20.4]	7200	7810	—	580 [22.8]	—	—
E-450 SD	158	14,050	LT225/75R16E	4600	4600	—	520 [20.5]	9450	9450	—	575 [22.6]	—	—
	176	14,050	LT225/75R16E	4600	4600	—	520 [20.5]	9450	9450	—	576 [22.6]	—	—

(1) The Height Data shown represents dimensions of a nominal vehicle with no options. Actual height may vary due to production tolerances.
(2) Single Rear Wheels.
(3) 4600 lb. Standard with Ambulance Prep Package.
(4) School Bus Prep Package.

NOTE — [ ] DIMENSIONS ARE INCHES.

TIRE/GROUND CLEARANCE DATA
SUPER DUTY CUTAWAY/CHASSIS CAB/STRIPPED CHASSIS

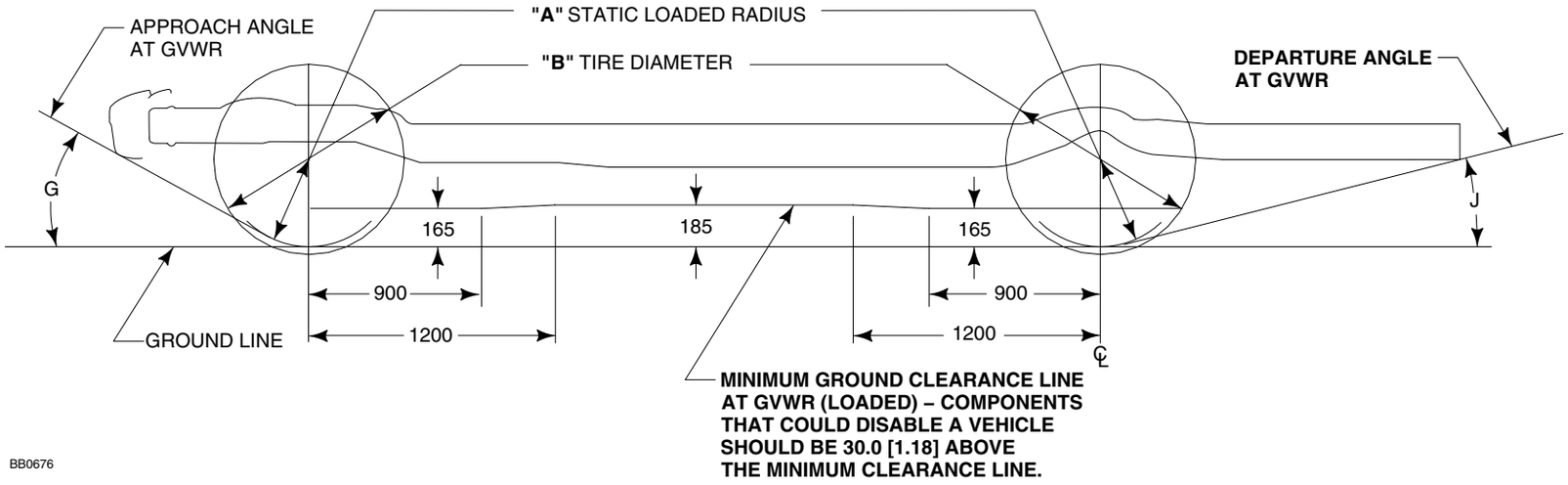

BASE VEHICLE UNLOADED

MODEL	TIRE SIZE	ALL SEASON TIRE DATA				TREAD WIDTH		OW	TH	TW	GROUND CLEARANCE							
		A	B	C		FW	RW	OVERALL WIDTH	STD	STD	G				J			
											APPROACH ANGLE				DEPARTURE ANGLE			
		STATIC LOADED RADIUS	MAX. DIAMETER	MAX. SECTION WIDTH	RIM WIDTH	FRONT	REAR	REAR	SPRING	SPRING	124" WB	138" WB	158" WB	176" WB	124" WB	138" WB	158" WB	176" WB
E-250 Stripped Chassis SRW	LT225/75R16D	346 [13.6]	757 [29.8]	236 [9.3]	178 [7.0]	1763 [69.4]	1692 [66.6]	1928 [75.9]	297 [11.6]	628 [24.7]	31°	N/A	N/A	N/A	17°	N/A	N/A	N/A
E-350 Cutaway SRW	LT245/75R16E	342 [13.5]	787 [31.0]	263 [10.3]	178 [7.0]	1763 [69.4]	1831 [72.1]	2094 [82.4]	307 [12.1]	710 [28.0]	N/A	33°	N/A	N/A	N/A	14°	N/A	N/A
E-350 Cutaway/Chassis Cab DRW	LT225/75R16E	346 [13.6]	757 [29.8]	236 [9.3]	152 [6.0]	1763 [69.4]	1859 [73.2]	2349 [92.5]	329 [12.9]	684 [26.9]	N/A	34°	34°	34°	N/A	14°	14°♦	14°♦
E-350 Stripped Chassis SRW	LT245/75R16E	342 [13.5]	787 [31.0]	263 [10.3]	178 [7.0]	1763 [69.4]	1687 [66.4]	1950 [76.7]	298 [11.7]	638 [25.1]	N/A	31°	31°	N/A	N/A	14°	14°	N/A
E-350 Stripped Chassis DRW	LT225/75R16E	346 [13.6]	757 [29.8]	236 [9.3]	152 [6.0]	1763 [69.4]	1859 [73.2]	2349 [92.5]	329 [12.9]	684 [26.9]	N/A	31°	31°	32°	N/A	14°	14°	14°
E-450 Cutaway/Chassis Cab DRW	LT225/75R16E	346 [13.6]	757 [29.8]	236 [9.3]	152 [6.0]	1763 [69.4]	1974 [77.7]	2464 [97.0]	325 [12.8]	743 [29.2]	N/A	N/A	34°	34°	N/A	N/A	14°♦	14°♦
E-450 Stripped Chassis DRW	LT225/75R16E	346 [13.6]	757 [29.8]	236 [9.3]	152 [6.0]	1763 [69.4]	1974 [77.7]	2464 [97.0]	325 [12.8]	743 [29.2]	N/A	N/A	31°	32°	N/A	N/A	14°♦	14°♦

♦ 55-gallon tank and 18 inch frame extension.

NOTE — [ ] DIMENSIONS ARE INCHES.

E-550 SUPER DUTY CUTAWAY/CHASSIS CAB TIRE/GROUND CLEARANCE DATA

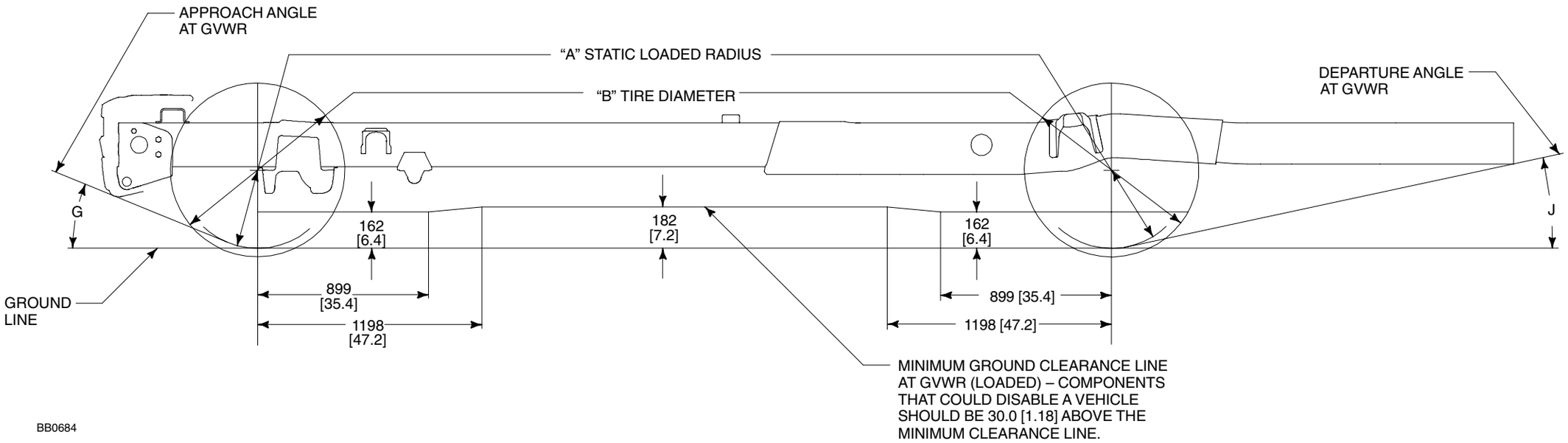

BASE VEHICLE UNLOADED CURB WEIGHT

MODEL	TIRE SIZE	ALL SEASON TIRE DATA				TREAD WIDTH		OW	TH	TW	GROUND CLEARANCE									
		A	B	C		FW	RW	OVERALL WIDTH	STD	STD	G					J				
											APPROACH ANGLE					DEPARTURE ANGLE				
		STATIC LOADED RADIUS	MAX. DIAMETER	MAX. SECTION WIDTH	RIM WIDTH	FRONT	REAR	REAR	SPRING	SPRING	159.5 WB	177.5 WB	191.5 WB	209.5 WB	233.5 WB	159.5 WB	177.5 WB	191.5 WB	209.5 WB	233.5 WB
E-550	225/70R19.5F	378 [14.9]	811 [31.9]	226 [8.9]	152 [6.0]	1999 [78.7]	1970 [77.5]	2456 [96.7]	205.7 [8.1]	708 [27.9]	33°	33°	33°	33°	33°	15.9°	15.9°	14.5°	12.6°	10.6°

NOTE — [ ] DIMENSIONS ARE INCHES.

E-SERIES SUPER DUTY CUTAWAY/CHASSIS CAB/STRIPPED CHASSIS FUEL FILLER SYSTEMS

AFT-OF-AXLE FUEL FILLER SYSTEM

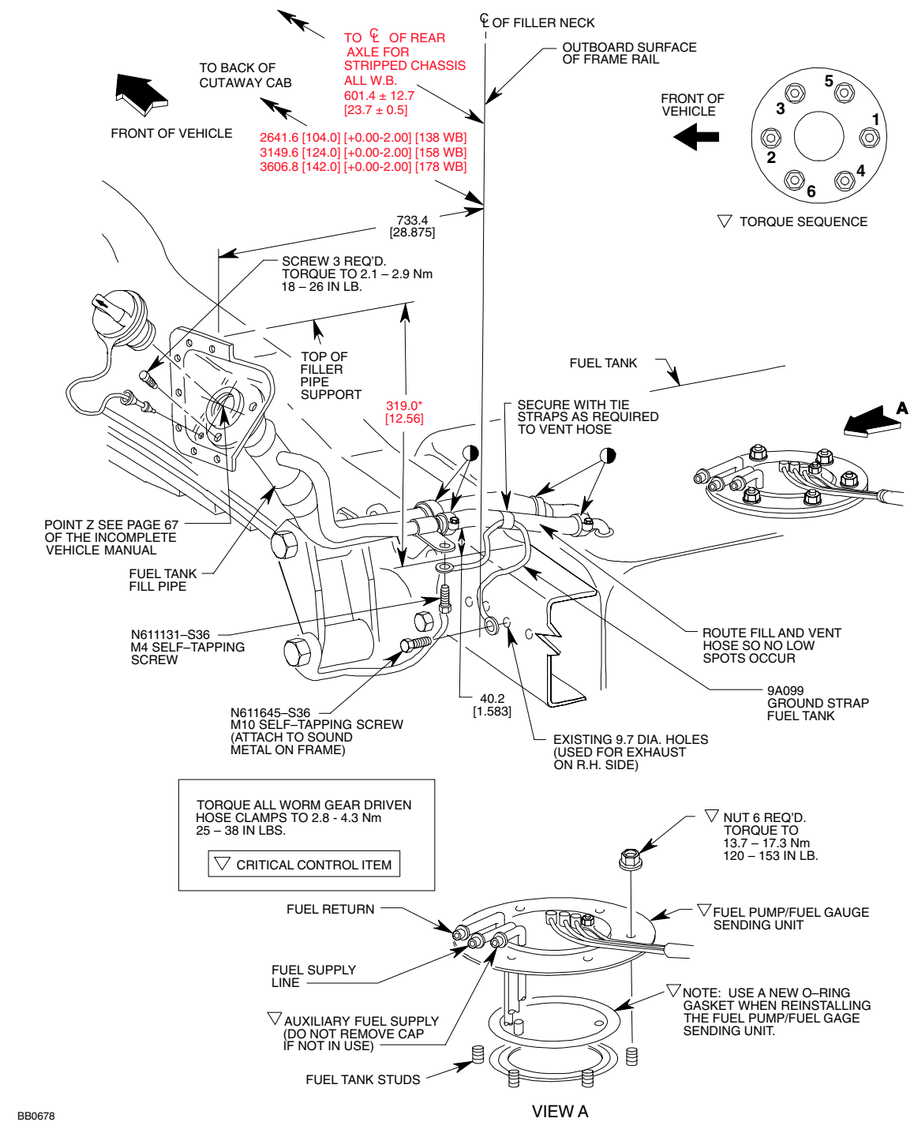

NOTES — [ ] DIMENSIONS ARE INCHES.
* FILLER HEIGHT FOR NATURAL GAS IS 416.0 [16.38]. FILLER HEIGHT FOR SCHOOL BUS FUEL SYSTEM 396.9 [15.62].

E-350/450 SUPER DUTY
CUTAWAY/CHASSIS CAB/STRIPPED CHASSIS
37/55 GALLON AFT-OF-AXLE FUEL TANK

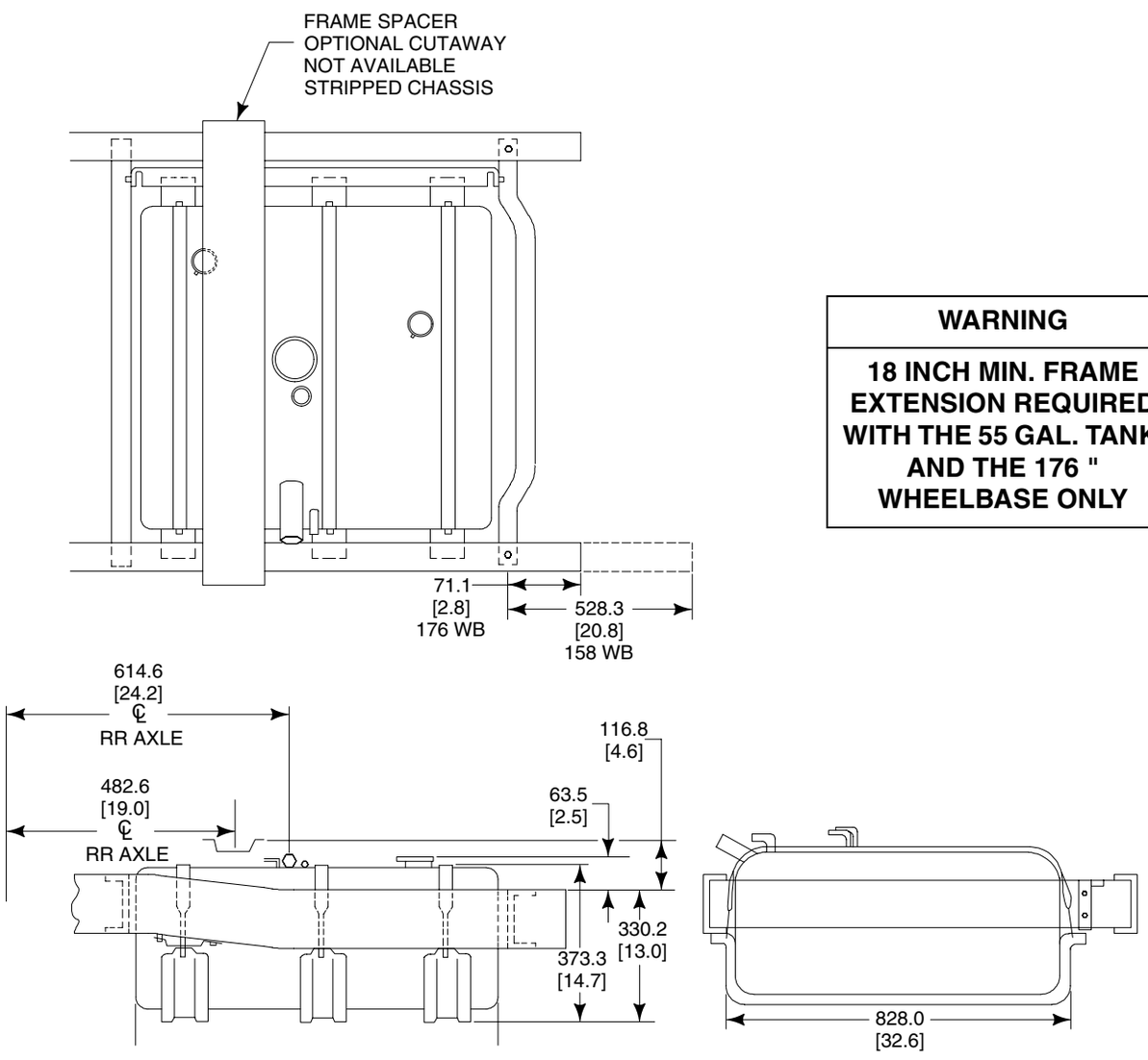

55–GALLON TANK

WARNING

18 INCH MIN. FRAME EXTENSION REQUIRED WITH THE 55 GAL. TANK AND THE 176 " WHEELBASE ONLY

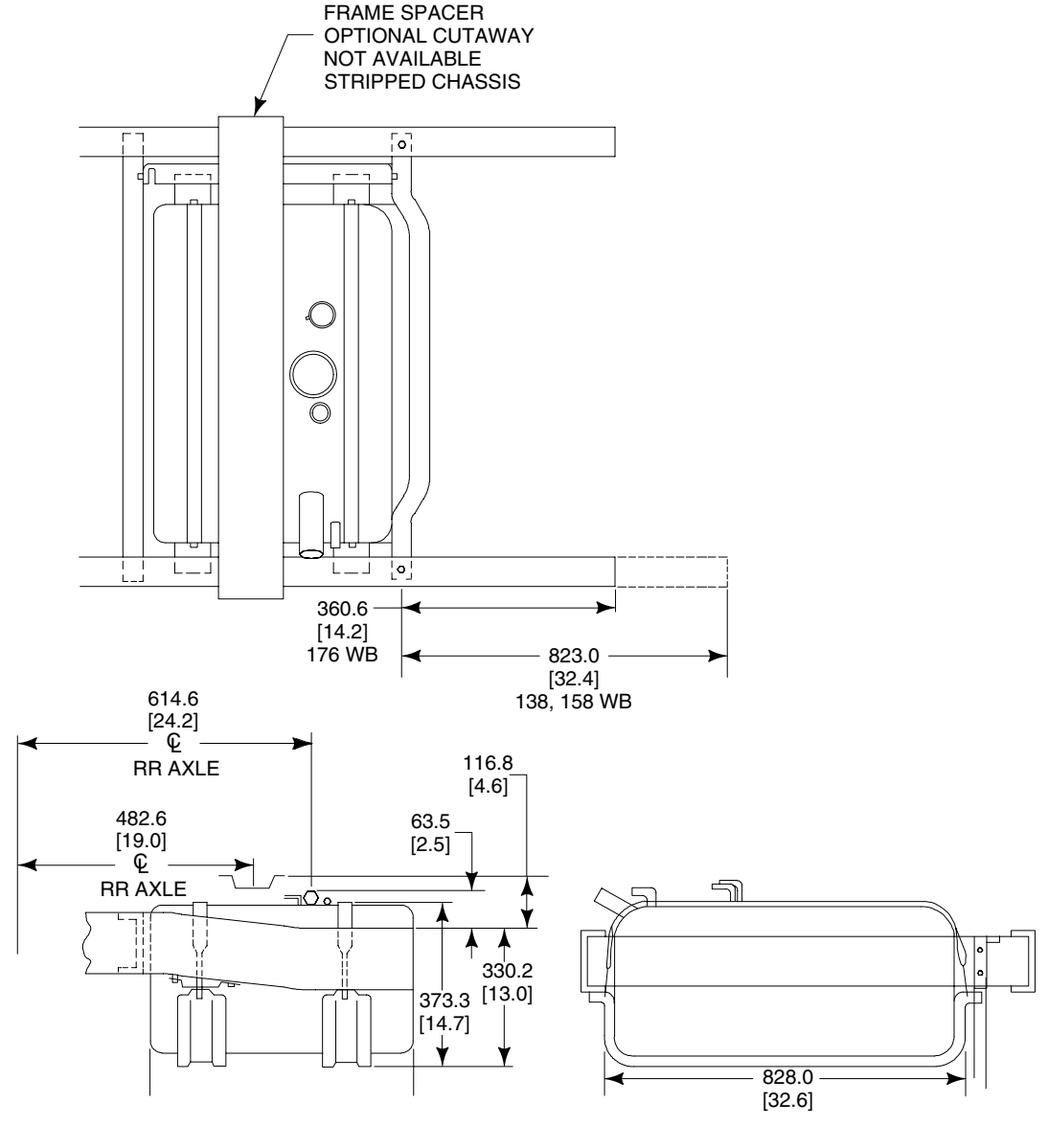

37–GALLON TANK

BB0038

NOTE — [ ] DIMENSIONS ARE INCHES.

E-550 SUPER DUTY CUTAWAY/CHASSIS CAB
55 GALLON AFT-OF-AXLE FUEL TANK

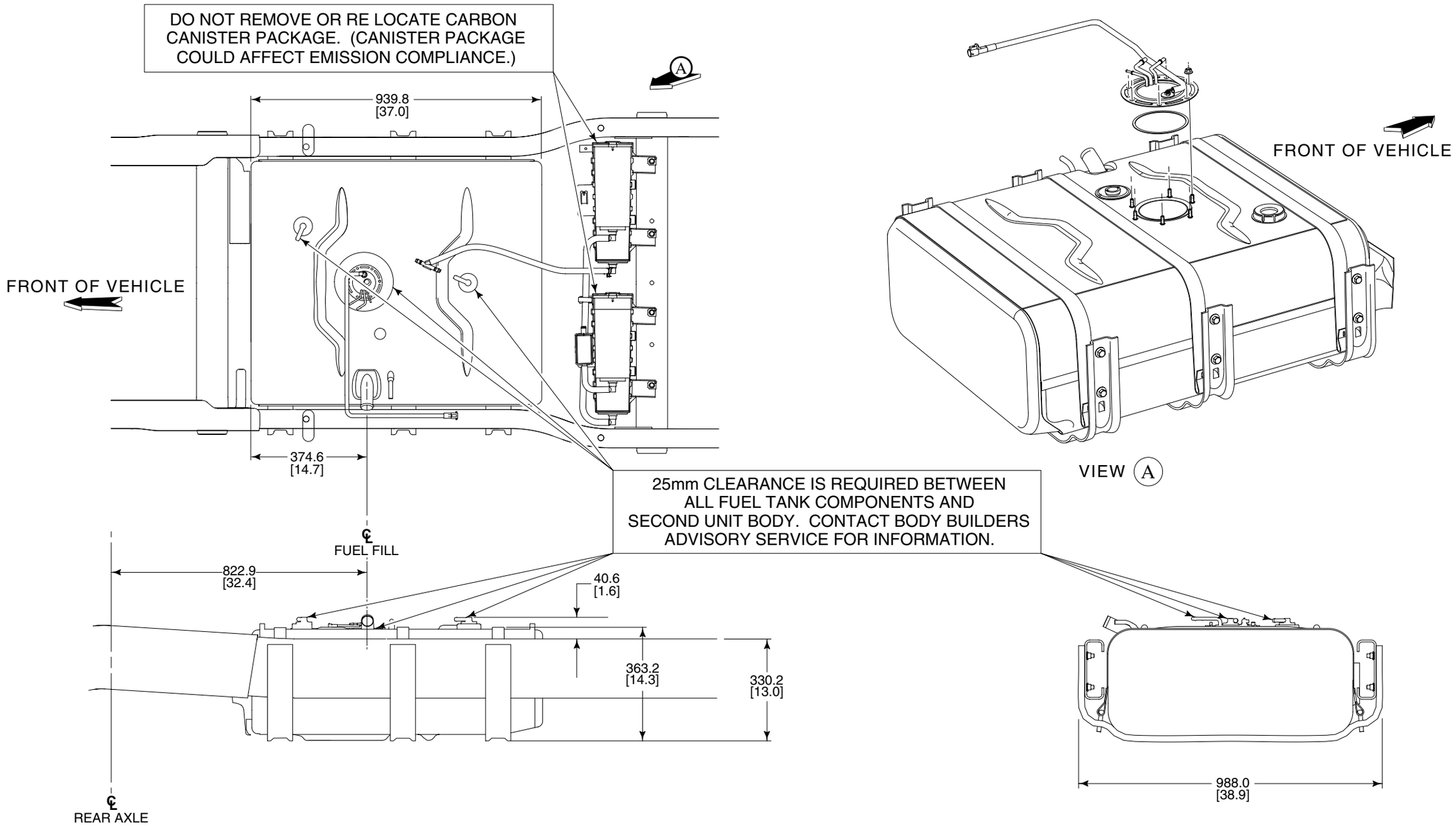

BB0693 2003

NOTE — [ ] DIMENSIONS ARE INCHES.

E-SERIES TRAILER TOW WIRING

ELECTRONIC BRAKE CIRCUITS

			RECOMMENDED MAX ALLOWABLE		
			WIRE LENGTH (feet)		
CRKT. COLOR	CODE	DESCRIPTION	14 AWG	12 AWG	10 AWG
Dark Blue	DB	Trailer Electric Brake	50	50	50
Orange	OG	Trailer Battery Feed	N/A	20	20
Yellow	YE	Trailer LH Turn/Stop Lamp	50	50	50
Dark Green	DG	Trailer RH Turn/Stop Lamp	50	50	50
White	WH	Trailer Ground	N/A	N/A	10 GA only
Brown-White	BR-WH	Trailer Run Lamps	50	50	50
Black-Light Green	BK-LG	Trailer Back-Up Lamps	50	50	50

ELECTRONIC BRAKE CIRCUITS

Dark Blue	DB	Trailer Electric Brake
Brown	BR	Vehicle Tail Lamp and Marker Lamp
Red	RD	Vehicle Control Feed
Light Green	LG	Vehicle Brake Signal
White	WH	Trailer Ground

VEHICLE CIRCUIT

Orange-Light Blue	OG-LB	Vehicle RH Rear Turn Signal
Light Green-Orange	LG-OG	Vehicle LH Rear Turn Signal
Black-Pink	BK-PK	Vehicle Back-Up Lamp Feed
Yellow	YE	Vehicle Battery Feed
White-Purple	WH-PR	Vehicle Fuse Accessory Feed
White-Light Green	WH-LG	Vehicle Tail and Marker Lamp

CLASS II to CLASS I
PART # F4TB 12964 A

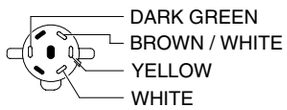

CLASS I
PART # F7UB 13A576 A

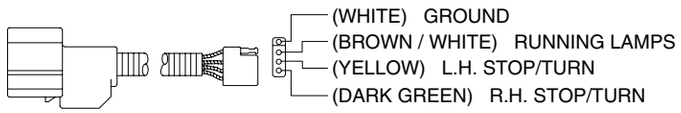

CLASS II WITH PIN TERMINALS
PART # F7UB 14A678 C

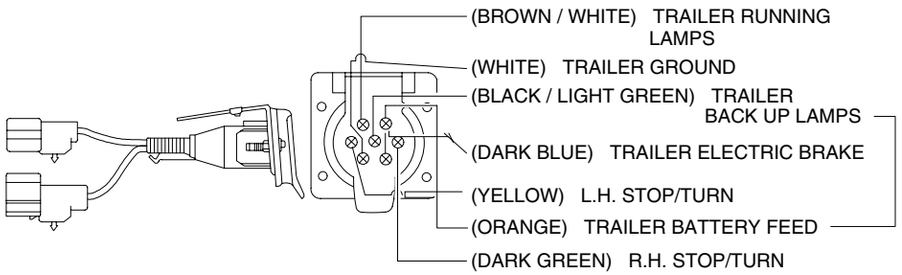

CLASS II WITH PIN TERMINALS TO CLASS I
PART # F2TB 13A576 AA

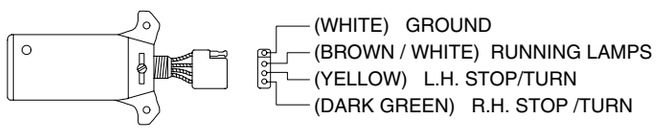

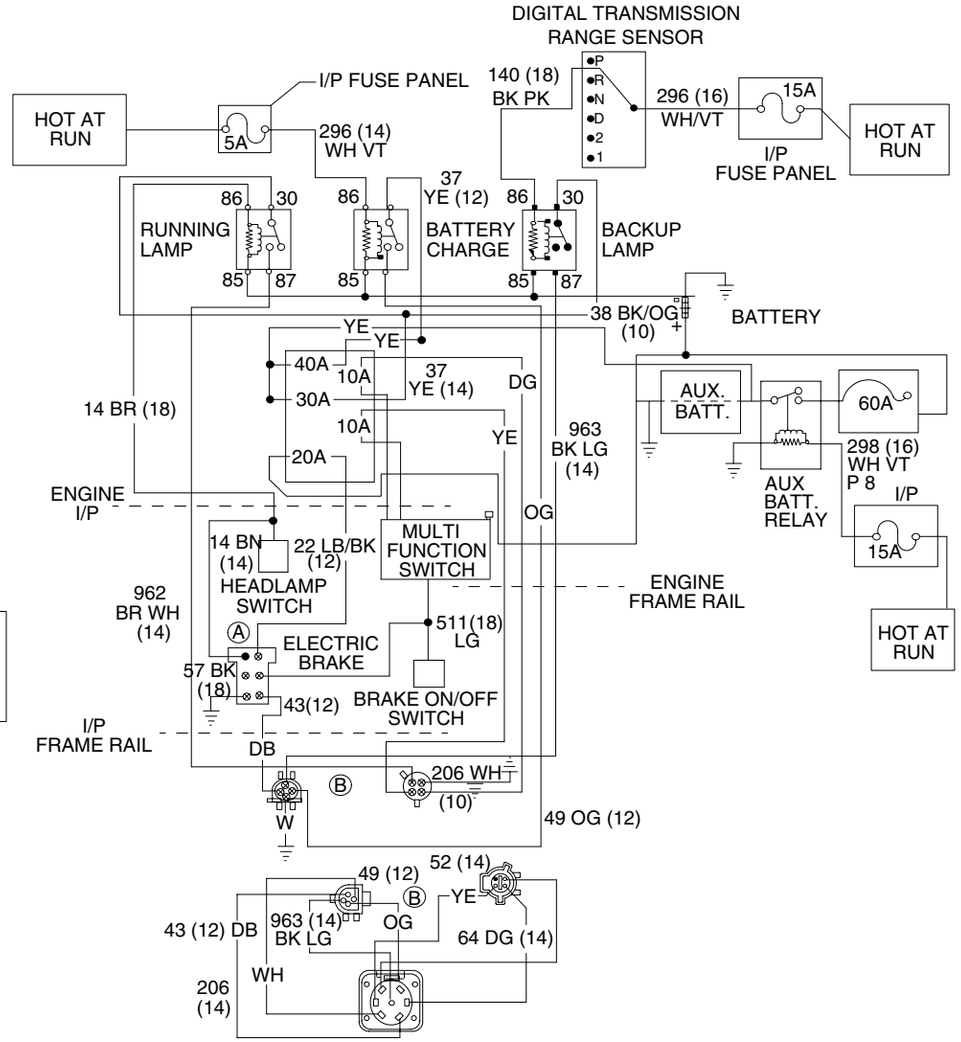

FORD SERVICE ALTERNATIVES AVAILABLE AT YOUR FORD DEALER (NOT SUPPLIED WITH TRAILER KIT)

E-SERIES TRAILER TOW WIRING

2003
MODEL YEAR

STEP BUMPER PACKAGE

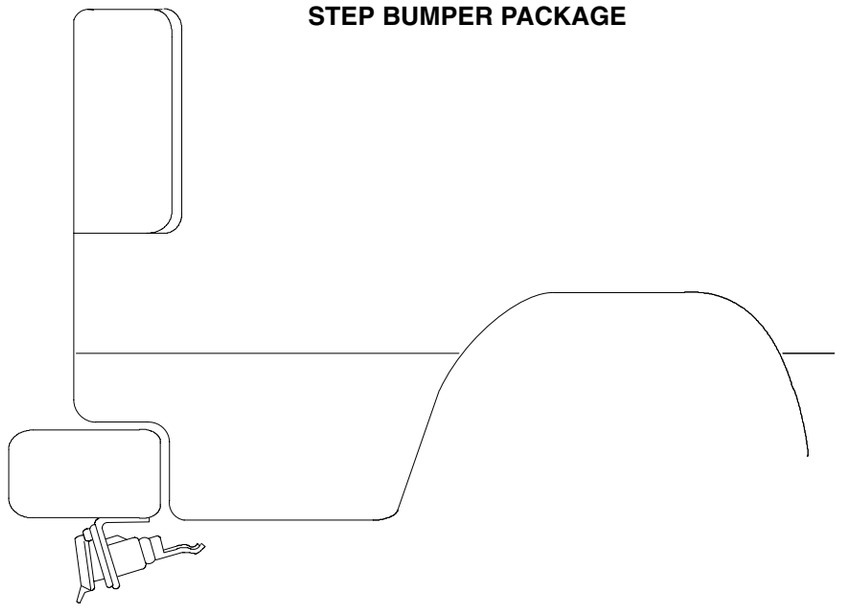

SLIDE TRAILER TOW BRACKET ASSEMBLY TO THE MOST FORWARD POSITION IN VEHICLE. FAILURE TO DO SO MAY RESULT IN BRACKET DAMAGE. THIS APPLIES TO VEHICLES WITH OR WITHOUT A HITCH. THIS NOTE APPLIES TO BOTH THE CONTOUR AND STEP BUMPER PACKAGES.

ELECTRIC BRAKE CONTROL

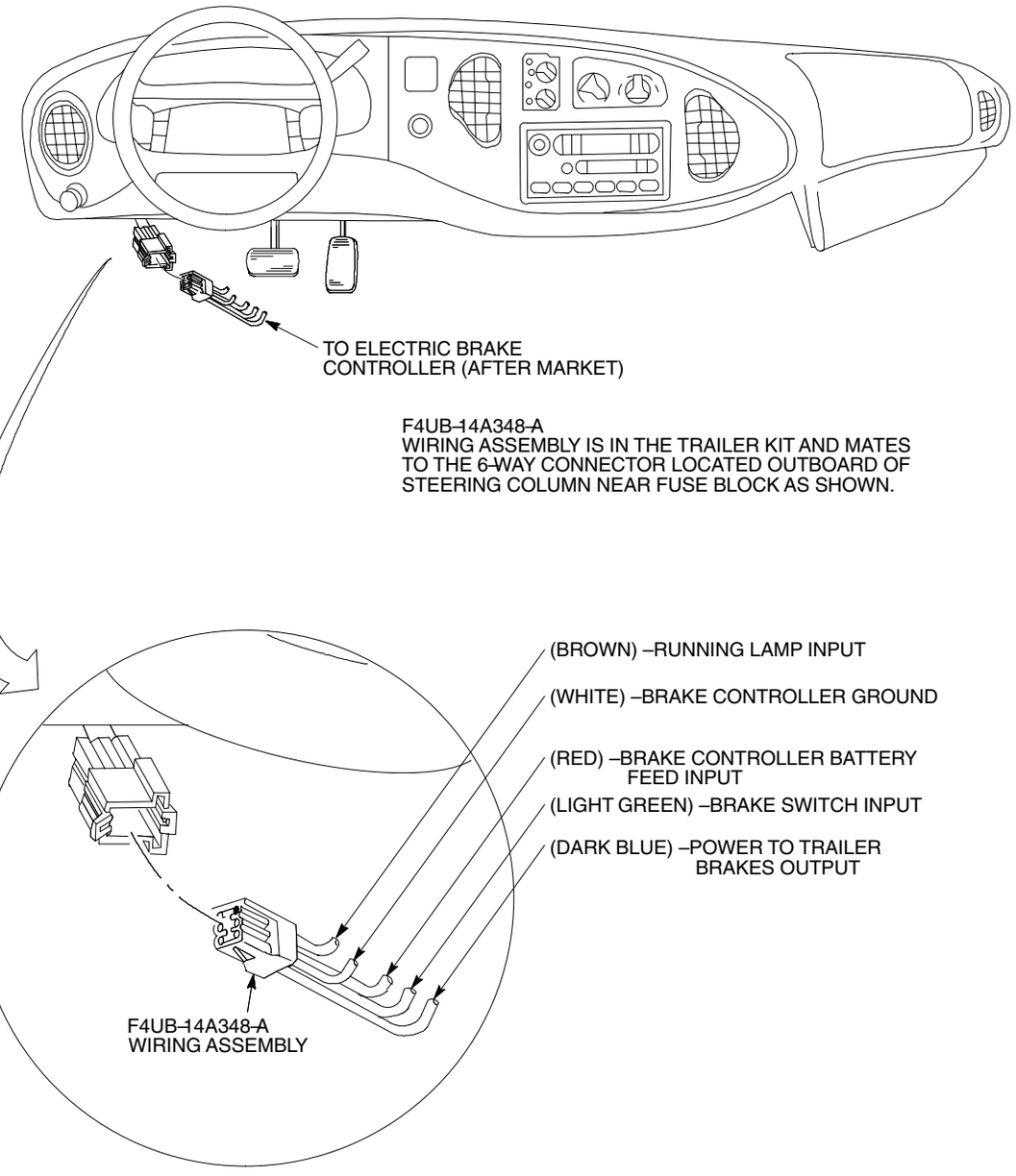

THE BRAKE CONTROLLER BATTERY FEED INPUT IS FUSED TO 30A IN THE ENGINE COMPARTMENT'S DISTRIBUTION BOX.

CONTOUR BUMPER PACKAGE

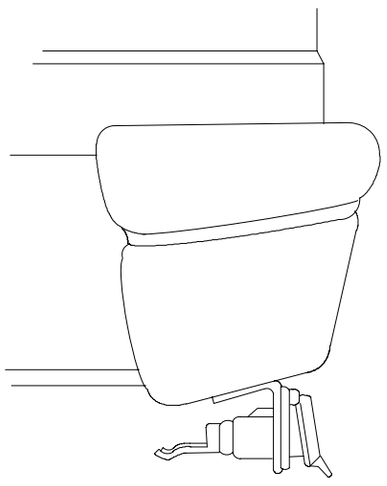

FRAME CONNECTIONS

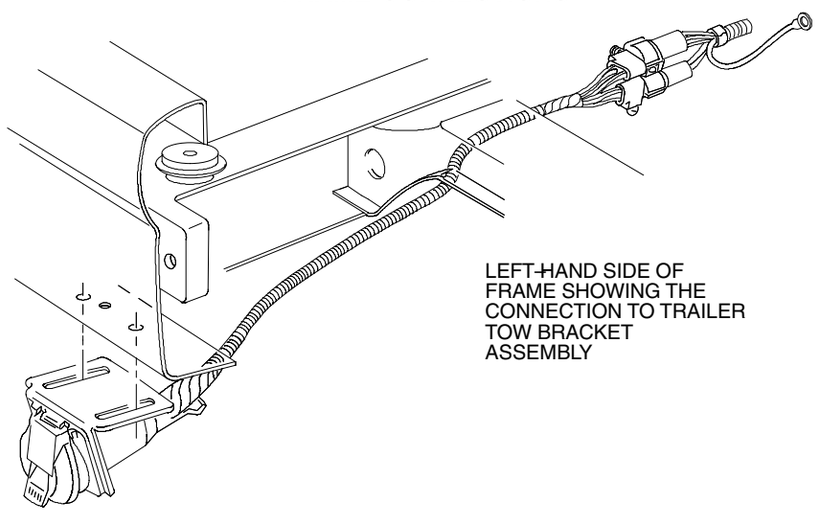

CHECK TRAILER LIGHTS AFTER INSTALLATION TO DETERMINE IF THEY FUNCTION CORRECTLY.
DO NOT OPERATE THE VEHICLE WITH A TRAILER IF A PROBLEM EXISTS.

E-SERIES TRAILER LAMP PLUG AND WIRING

2003
MODEL YEAR

AUXILIARY HTR. A/C SYSTEM SCHEMATIC

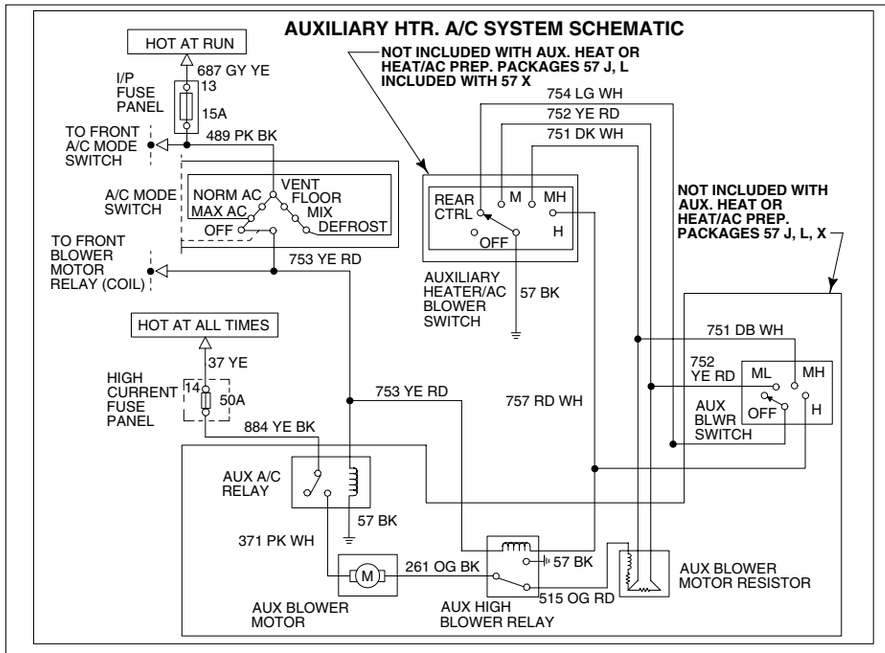

MODIFIED VEHICLE SCHEMATIC

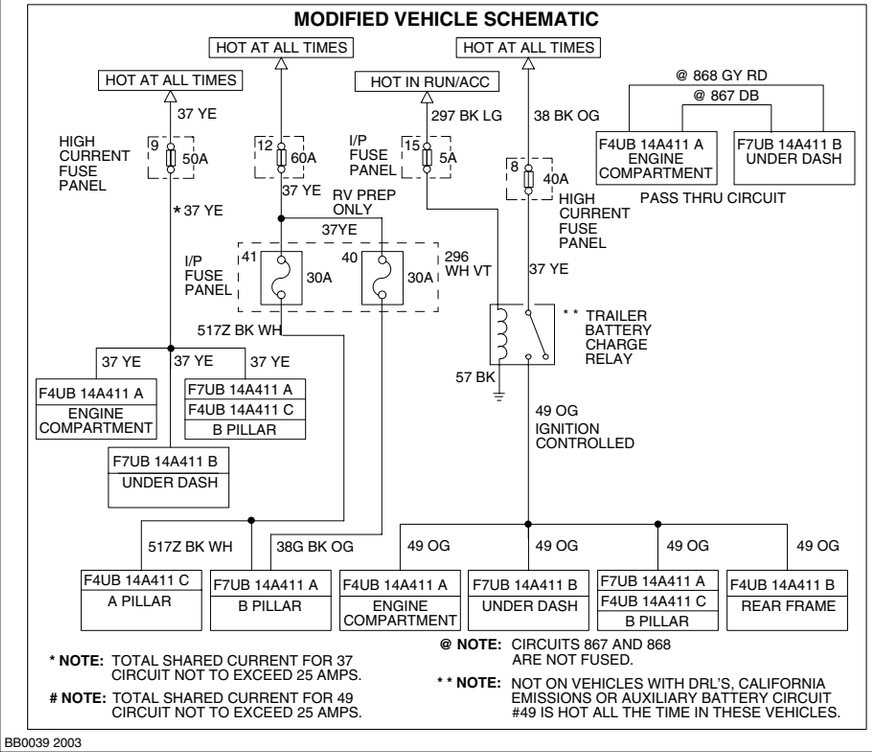

*** NOTE:** TOTAL SHARED CURRENT FOR 37 CIRCUIT NOT TO EXCEED 25 AMPS.

 # NOTE: TOTAL SHARED CURRENT FOR 49 CIRCUIT NOT TO EXCEED 25 AMPS.

@ NOTE: CIRCUITS 867 AND 868 ARE NOT FUSED.

*** * NOTE:** NOT ON VEHICLES WITH DRL'S, CALIFORNIA EMISSIONS OR AUXILIARY BATTERY CIRCUIT #49 IS HOT ALL THE TIME IN THESE VEHICLES.

INSTRUMENT PANEL & B PILLAR

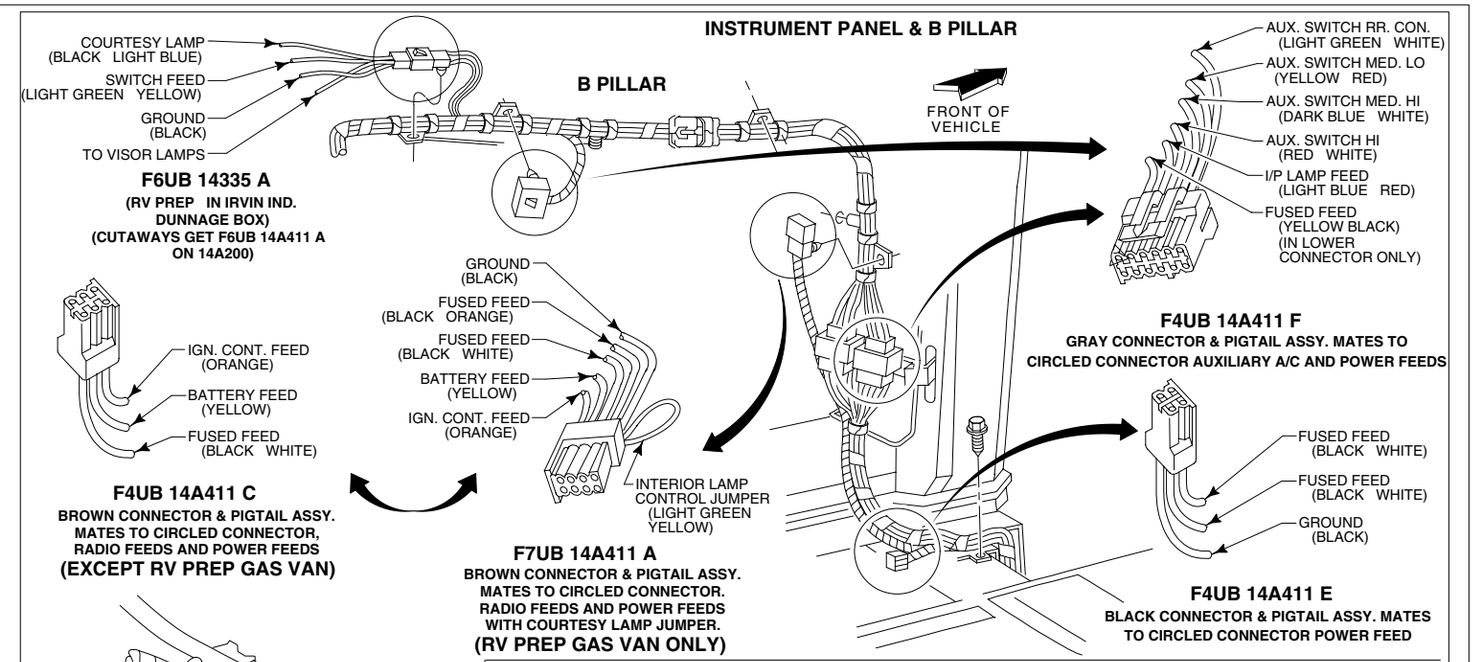

	LOAD NAME	CRCT NUM	WIRE GAGE	CRCT CLR	RECOMMENDED WIRE LENGTH (in feet) W/O ADDITIONAL FUSING							
					MAX CONT. CURRENT	CONT. LOAD 20 GA.	CONT. LOAD 18 GA.	CONT. LOAD 16 GA.	CONT. LOAD 14 GA.	CONT. LOAD 12 GA.	CONT. LOAD 10 GA.	CONT. LOAD 8 GA.
F7UB-14A411-A	BATTERY FEED	*37	12	YE	25 AMP					20	32	51
	IGN. CONTROL FEED*	#49	12	OG	25 AMP					91	141	230
	FUSED FEED	517	12	BK-WH	25 AMP					93	150	237
	GROUND (BLACK) FUSED FEED	38	12	BK BK-OG	24 AMP					93	150	237
	JUMPER	54	18	LG-YE			48	73	118			
F7UB-14A411-B	BATTERY FEED	*37	10	YE	25 AMP					26	42	66
	IGN. CONTROL FEED*	#49	12	OG	25 AMP					93	148	23
	PASS THRU (ENG.)	867	12	DB	25 AMP							
	PASS THRU (ENG.)	868	12	GY-RD	25 AMP							
	LH TURN SIG. FEED			LG-WH								
	RH TURN SIG. FEED			WH-LB								
F7UB-14A411-C	BATTERY FEED	*37	12	YE	10 AMP					20	32	51
	IGN. CONTROL FEED	#49	12	OG	5 AMP					91	146	230
	FUSED FEED	517	12	BK-WH	24 AMP					93	150	237
F7UB-14A411-E	FUSED FEED	517	12	BK-WH	24 AMP					15	25	35
	FUSED FEED	517A	14	BK-WH	8 AMP				40	50	50	
	GROUND	57	14	BK						15	25	35
F7UB-14A411-F	I/P	19	20	LB-RD	8 AMP	50	50	50				
	FUSED FEED	884	10	YE-BK	10 AMP	(HOT IN LOWER CONNECTOR ONLY)					30	45
	AUX. SW. HI	757	18	RD-WH	8 AMP	(CIRCUIT TO BE USED FOR RELAY GROUND RETURN ONLY)						
	AUX. SW. RR. CON			LG-WH								
	AUX. SW. MED. LO			YE-RD								
	AUX. SW. MED. HI			DB-WH								

BB0039 2003

E-SERIES TRAILER LAMP PLUG AND WIRING

2003
MODEL YEAR

HEAVY DUTY TRAILER TOW SCHEMATIC

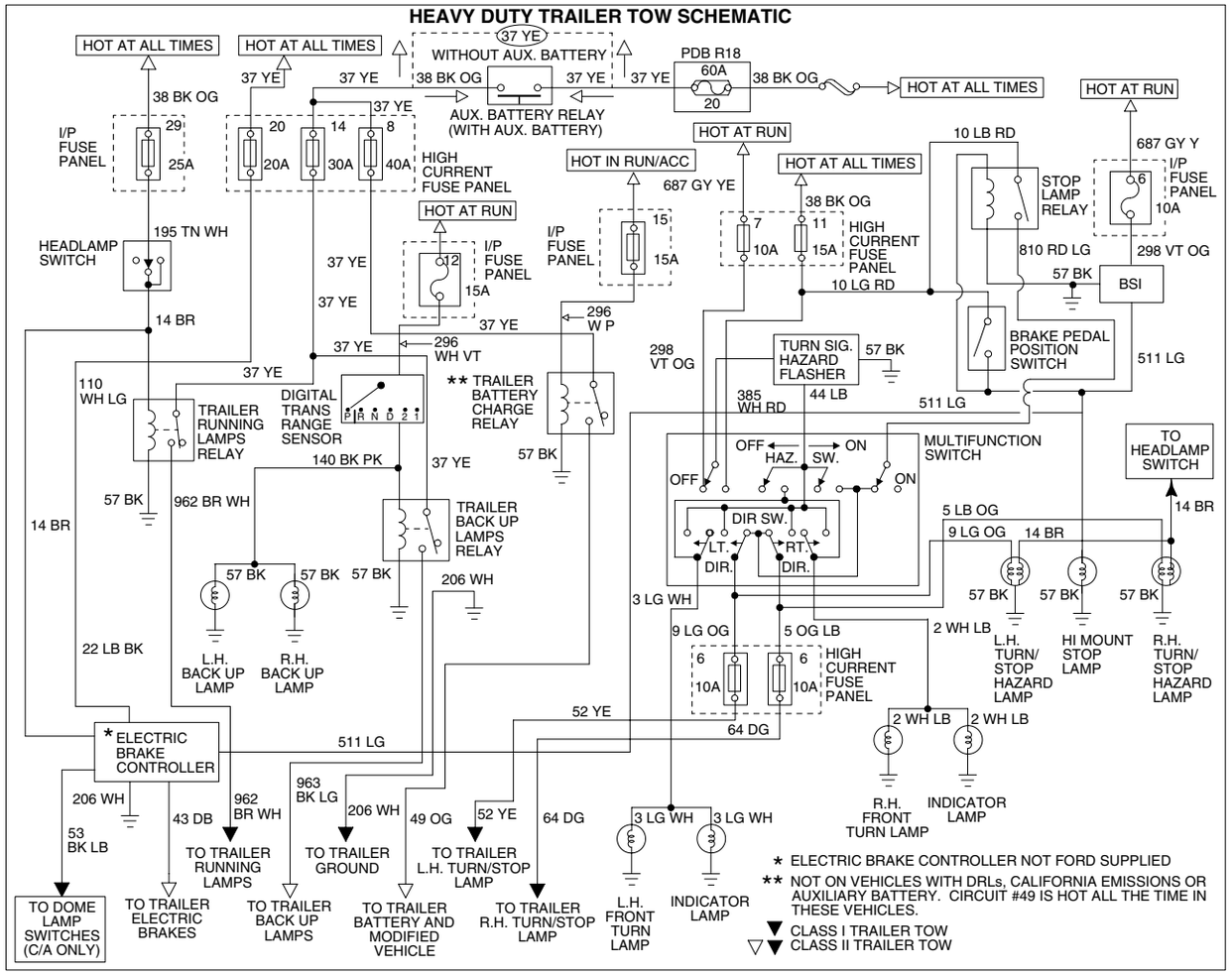

FRAME (L.H. REAR)

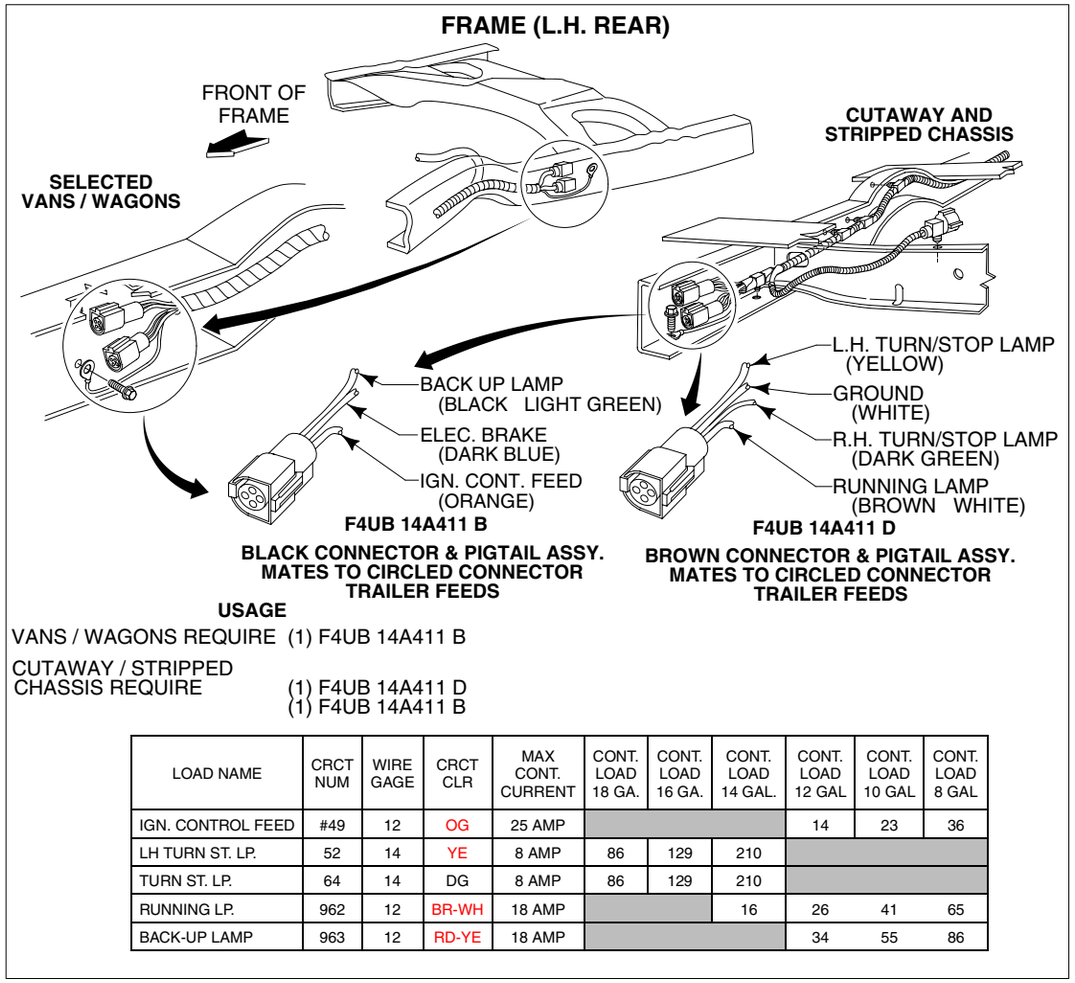

USAGE

VANS / WAGONS REQUIRE (1) F4UB 14A411 B

CUTAWAY / STRIPPED CHASSIS REQUIRE (1) F4UB 14A411 D
(1) F4UB 14A411 B

LOAD NAME	CRCT NUM	WIRE GAGE	CRCT CLR	MAX CONT. CURRENT	CONT. LOAD 18 GA.	CONT. LOAD 16 GA.	CONT. LOAD 14 GAL.	CONT. LOAD 12 GAL	CONT. LOAD 10 GAL	CONT. LOAD 8 GAL
IGN. CONTROL FEED	#49	12	OG	25 AMP				14	23	36
LH TURN ST. LP.	52	14	YE	8 AMP	86	129	210			
TURN ST. LP.	64	14	DG	8 AMP	86	129	210			
RUNNING LP.	962	12	BR-WH	18 AMP			16	26	41	65
BACK-UP LAMP	963	12	RD-YE	18 AMP				34	55	86

ENGINE COMPARTMENT

LOAD NAME	CRCT NUM	WIRE GAGE	CRCT CLR	RECOMMENDED WIRE LENGTH (in feet) W/O ADDITIONAL FUSING				
				MAX CONT. CURRENT	CONT. LOAD 14 GAL.	CONT. LOAD 12 GAL	CONT. LOAD 10 GAL	CONT. LOAD 8 GAL
IGN. CONTROL FEED	#49	12	OG	25 AMP		95	152	240
PASS THRU (I/P)	867	12	DB	25 AMP				
PASS THRU (I/P)	868	12	GY-RD	25 AMP				
BATTERY FEED	#37	10	YE	25 AMP		28	45	71

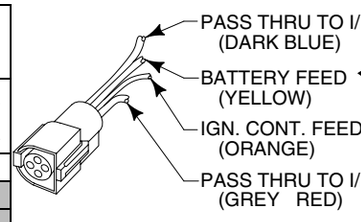

F4UB 14A411 A
BLACK CONNECTOR & PIGTAIL ASSY.
MATES TO CIRCLED CONNECTOR
ENGINE COMPARTMENT

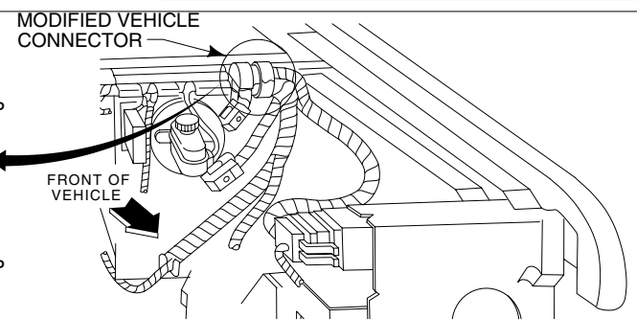

VIEW OF FRONT END
ENGINE COMPARTMENT
(L.H. SIDE)

IP (LH)

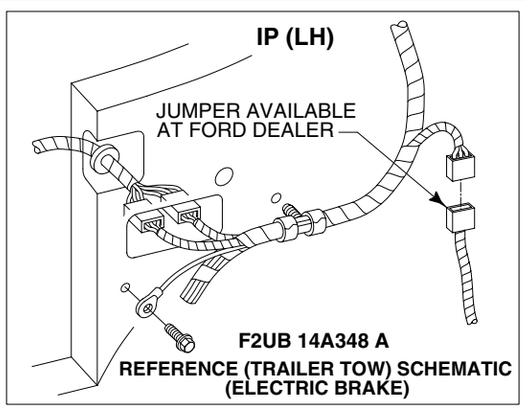

F2UB 14A348 A
REFERENCE (TRAILER TOW) SCHEMATIC
(ELECTRIC BRAKE)

BB0040 2003

DIMENSIONAL DATA
F-150 REGULAR CAB STYLESIDE 4X2/4X4

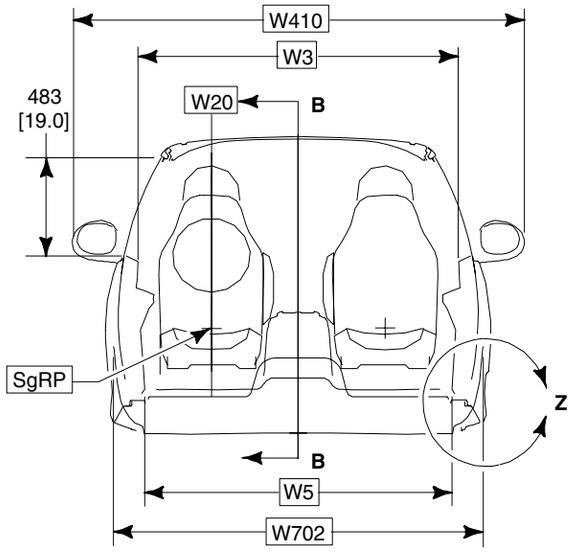

SEC **A**

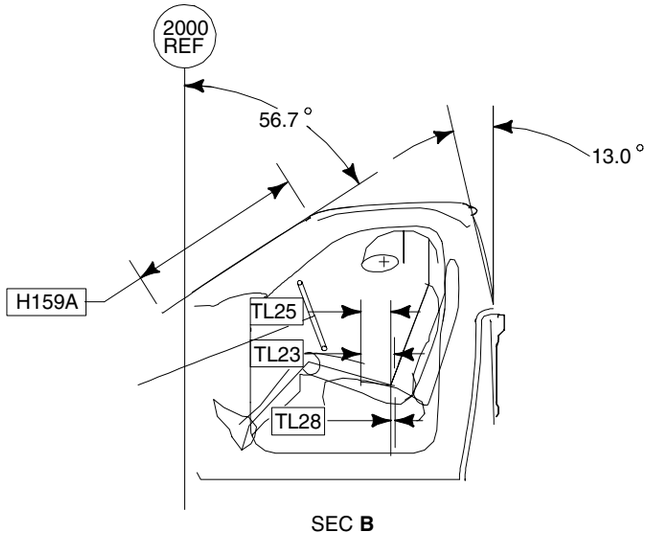

SEC **B**

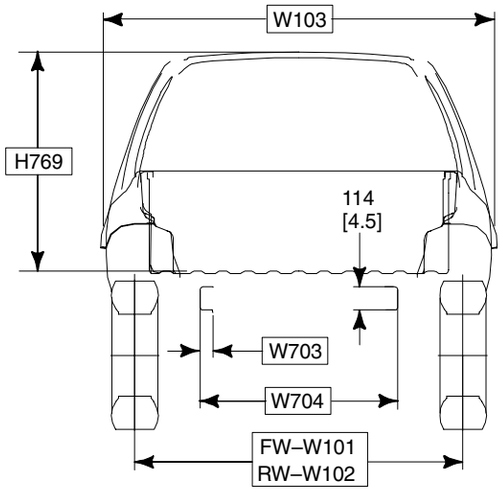

SEC **C**

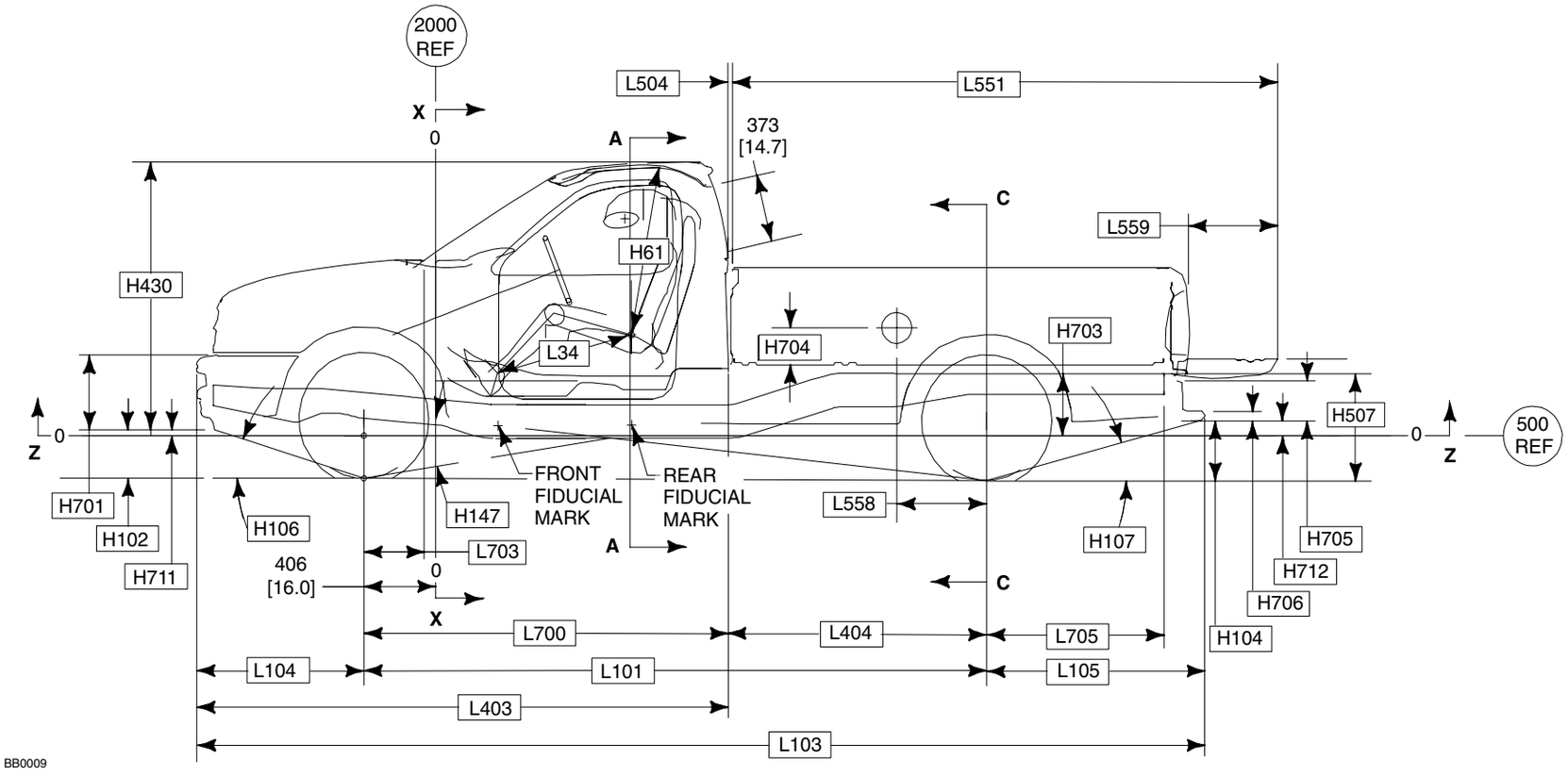

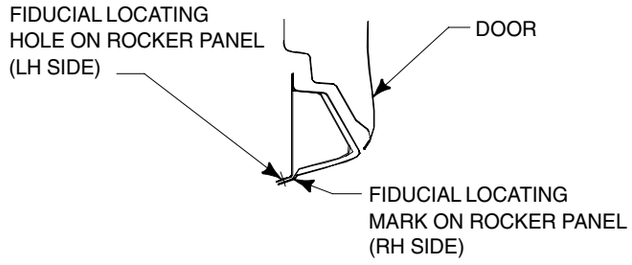

VIEW IN CIRCLE **Z**

FIDUCIAL COORDINATE CHART				
PT.		X	Y	Z
FRONT	RH	2300 [90.6]	844 [33.2]	559 22.0]
	LH	—	—	—
REAR	RH	3476 [136.8]	844 [33.2]	559 [22.0]
	LH	3105 [122.2]	829 [32.6]	554 [21.8]

NOTES — [ ] DIMENSIONS ARE INCHES.
— **CH, LH, F, R, FW, RW** DIMENSIONS, SEE PAGE 141.
— TIRE DATA, PAGE 143.
— INTERIOR BOX DIMENSIONS, PAGE 137.
— SgRP X AND Z LOCATIONS, PAGE 31.
— X AND Z REFERENCE LINE LOCATIONS, PAGE 139.

DIMENSIONAL DATA
F-150 REGULAR CAB STYLESIDE 4X2/4X4

CHASSIS

CODE	DESCRIPTION	LWB F-150		SWB F-150	
		4x2	4x4	4x2	4x4
H102	BOTTOM OF FRONT BUMPER VALANCE TO GROUND @ CURB	256 [10.1]	338 [13.3]	272 [10.7]	375 [14.7]
H104	BOTTOM OF REAR BUMPER TO GROUND @ CURB	341 [13.4]	433 [17.0]	351 [13.8]	458 [18.0]
H106	ANGLE OF APPROACH	18.2°	25.7°	18.5°	26.0°
H107	ANGLE OF DEPARTURE	16.3°	20.7°	16.2°	19.9°
H147	RAMP BREAKOVER ANGLE	15.0°	19.8°	17.4°	21.7°
H507	TOP OF FRAME TO GROUND	843 [33.2]	843 [33.2]	843 [33.2]	843 [33.2]
L101	WHEELBASE	3519 [138.5]	3526 [138.8]	3046 [119.9]	3054 [120.2]
L103	OVERALL LENGTH — STANDARD REAR STEP BUMPER	5729 [225.5]	5736 [225.8]	5256 [206.9]	5264 [207.2]
L104	FRONT OVERHANG	983 [38.7]	983 [38.7]	983 [38.7]	983 [38.7]
L105	REAR OVERHANG — STANDARD REAR STEP BUMPER	1227 [48.3]	1227 [48.3]	1227 [48.3]	1227 [48.3]
L403	FRONT BUMPER TO REAR OF CAB	3043 [119.8]	3043 [119.8]	3043 [119.8]	3043 [119.8]
L404	CAB TO ℄ OF REAR AXLE	1458 [57.4]	1465 [57.7]	985 [38.8]	993 [39.1]
L700	℄ OF FRONT AXLE TO REAR OF CAB	2061 [81.1]	2061 [81.1]	2061 [81.1]	2061 [81.1]
L705	℄ REAR AXLE TO END OF FRAME (INCLUDES REAR BUMPER MOUNTING BRACKET)	1039 [40.9]	1031 [40.6]	1039 [40.9]	1031 [40.6]
W703	FRAME RAIL WIDTH	66 [2.6]	66 [2.6]	66 [2.6]	66 [2.6]
W704	REAR FRAME WIDTH	1001 [39.4]	1001 [39.4]	1001 [39.4]	1001 [39.4]

PICKUP BODY

CODE	DESCRIPTION	LWB F-150		SWB F-150	
		4x2	4x4	4x2	4x4
NOMINAL CARGO BODY SIZE		8 FT.		6.5 FT.	
H703	Z REFERENCE LINE TO CARGO BODY FLOOR	424 [16.7]	424 [16.7]	424 [16.7]	424 [16.7]
H704	TOP OF FLOOR TO ℄ OF FUEL FILLER	170 [6.7]	170 [6.7]	170 [6.7]	170 [6.7]
H705	REAR BUMPER HEIGHT	221 [8.7]	221 [8.7]	221 [8.7]	221 [8.7]
—	REAR BUMPER WIDTH (NOT SHOWN)	1872 [73.7]	1872 [73.7]	1872 [73.7]	1872 [73.7]
H706	BOTTOM OF REAR BUMPER TO TOP OF BUMPER HITCH PLATE	51 [2.0]	51 [2.0]	51 [2.0]	51 [2.0]
H712	Z REFERENCE LINE TO BOTTOM OF REAR BUMPER	178 [7.0]	178 [7.0]	178 [7.0]	178 [7.0]
H769	TOP OF FLOOR TO TOP OF CAB @ ℄ REAR WHEELS	1092 [43.0]	1092 [43.0]	1092 [43.0]	1092 [43.0]
L504	CAB TO PICKUP BODY	13.5 [0.5]	13.5 [0.5]	13.5 [0.5]	13.5 [0.5]
L551	BOX OVERALL LENGTH TO OPEN TAILGATE	3068 [120.8]	3068 [120.8]	2601 [102.4]	2601 [102.4]
L558	℄ REAR AXLE TO ℄ FUEL FILLER	505 [19.9]	513 [20.2]	505 [19.9]	513 [20.2]
L559	OPEN TAILGATE	498 [19.6]	498 [19.6]	498 [19.6]	498 [19.6]

CAB

CODE	DESCRIPTION	4x2	4x4
H61	EFFECTIVE HEAD ROOM	1036 [40.8]	1036 [40.8]
H159A	WINDSHIELD HEIGHT	889 [35.0]	889 [35.0]
H430	Z REFERENCE LINE TO TOP OF CAB	1516 [59.7]	1516 [59.7]
H701	FRONT BUMPER HEIGHT	259 [10.2]	282 [11.1]
H711	Z REFERENCE LINE TO BOTTOM OF FRONT BUMPER (LESS LOWER VALANCE)	178 [7.0]	142 [5.6]
TL23	FORWARD SEAT TRACK	159 [6.3]	159 [6.3]
TL25	TRUE TRACK TRAVEL LENGTH	220 [8.7]	220 [8.7]
TL28	TRUE TRACK TRAVEL LENGTH REAR OF SgRP	40 [1.6]	40 [1.6]
L34	EFFECTIVE LEG ROOM	1039 [40.9]	1039 [40.9]
L703	℄ FRONT AXLE TO COWL POINT	345 [13.6]	345 [13.6]
W3	SHOULDER ROOM	1620 [63.8]	1620 [63.8]
W5	HIP ROOM	1549 [61.0]	1549 [61.0]
W20	SgRP (Y)	–439 [–17.3]	–439 [–17.3]
W103	VEHICLE WIDTH	2014 [79.3]	2019 [79.4]
W410	OVERALL WIDTH WITH STANDARD MIRRORS	2278 [89.7]	2278 [89.7]
W702	FRONT BUMPER WIDTH	1880 [74.0]	1892 [74.5]

NOTE — [ ] DIMENSIONS ARE INCHES.

DIMENSIONAL DATA
F-150 SUPERCAB STYLESIDE 4X2/4X4

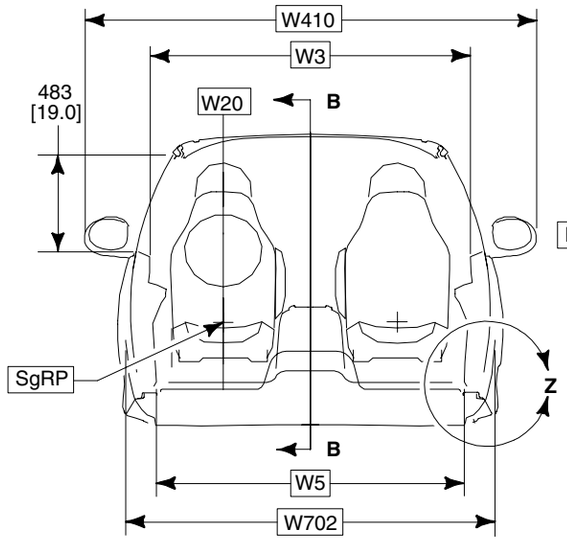

SEC **A**

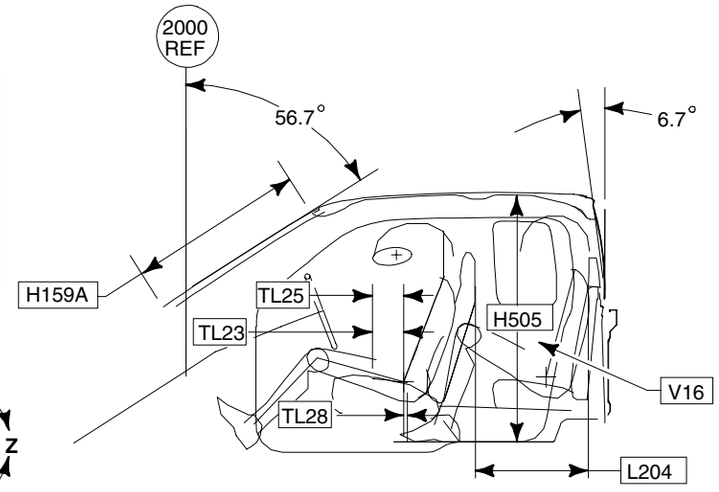

SEC **B**

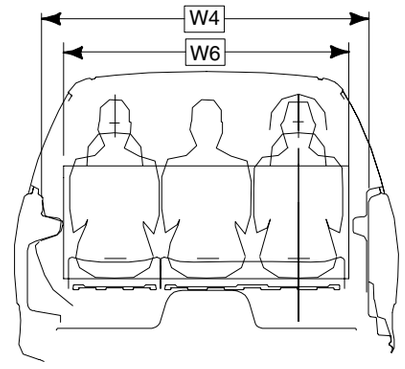

SEC **C**

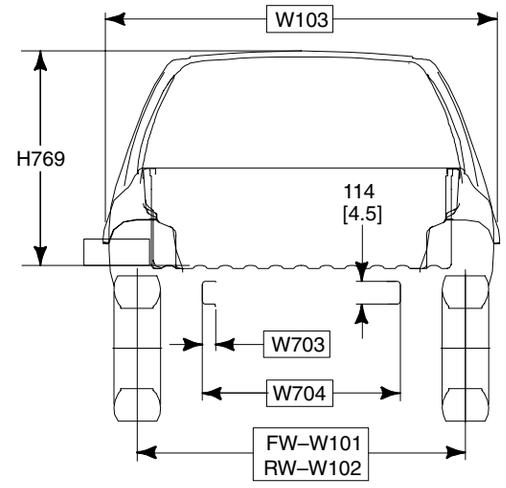

SEC **D**

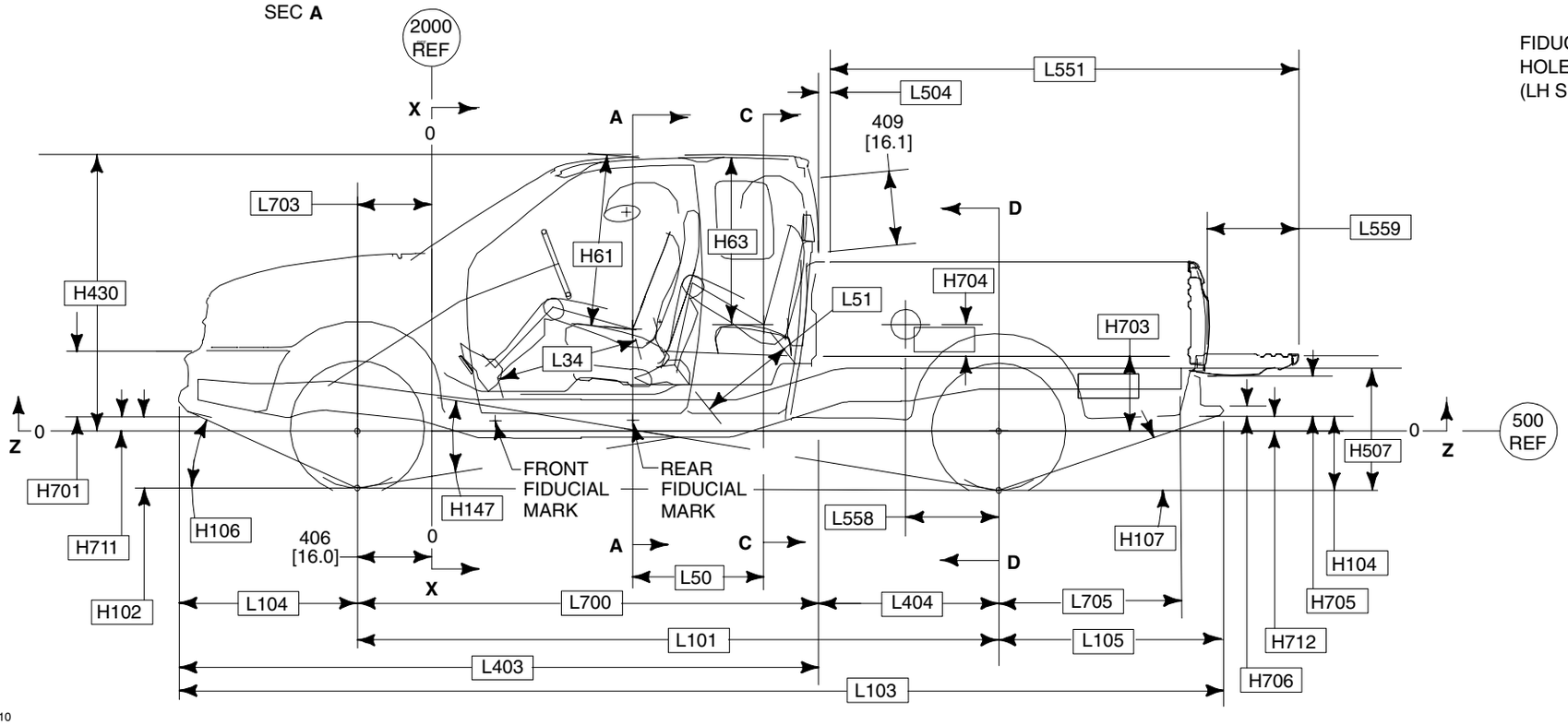

BB0010

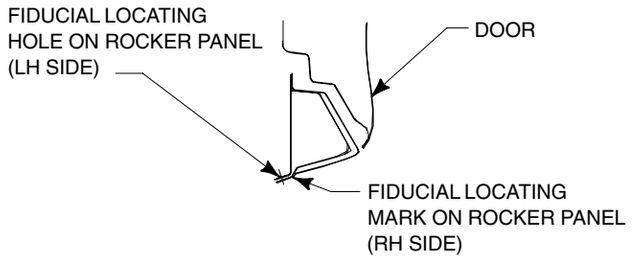

VIEW IN CIRCLE **Z**

FIDUCIAL COORDINATE CHART				
PT.		X	Y	Z
FRONT	RH	2350 [92.5]	829 [32.6]	556 [21.8]
	LH	———	———	———
REAR	RH	3476 [136.8]	829 [32.6]	555 [21.8]
	LH	3105 [122.2]	829 [32.6]	554 [21.8]

NOTES — [ ] DIMENSIONS ARE INCHES.
— **CH, LH, F, R, FW, RW** DIMENSIONS, SEE PAGE 141.
— TIRE DATA, PAGE 143.
— INTERIOR BOX DIMENSIONS, PAGE 137.
— SgRP X AND Z LOCATIONS, PAGE 31.
— X AND Z REFERENCE LINE LOCATIONS, PAGE 139.

DIMENSIONAL DATA
F-150 SUPERCAB STYLESIDE 4X2/4X4

2003
MODEL YEAR

CHASSIS

CODE	DESCRIPTION	LWB F-150 4x2	LWB F-150 4x4	SWB F-150 4x2	SWB F-150 4x4
H102	BOTTOM OF FRONT BUMPER VALANCE TO GROUND @ CURB	256 [10.1]	338 [13.3]	272 [10.7]	343 [13.5]
H104	BOTTOM OF REAR BUMPER TO GROUND @ CURB	341 [13.4]	433 [17.0]	351 [13.8]	458 [18.0]
H106	ANGLE OF APPROACH	18.3°	26.0°	18.9°	25.8°
H107	ANGLE OF DEPARTURE	16.1°	19.8°	16.2°	19.8°
H147	RAMP BREAKOVER ANGLE	13.6°	16.6°	14.7°	18.7°
H507	TOP OF FRAME TO GROUND	843 [33.2]	843 [33.2]	843 [33.2]	843 [33.2]
L101	WHEELBASE	3991 [157.1]	3998 [157.4]	3518 [138.5]	3525 [138.8]
L103	OVERALL LENGTH — STANDARD REAR STEP BUMPER	6201 [244.1]	6208 [244.4]	5728 [225.5]	5735 [225.8]
L104	FRONT OVERHANG	983 [38.7]	983 [38.7]	983 [38.7]	983 [38.7]
L105	REAR OVERHANG — STANDARD REAR STEP BUMPER	1227 [48.3]	1227 [48.3]	1227 [48.3]	1227 [48.3]
L403	FRONT BUMPER TO REAR OF CAB	3515 [138.4]	3515 [138.4]	3515 [138.4]	3515 [138.4]
L404	CAB TO ℄ OF REAR AXLE	1459 [57.4]	1466 [57.7]	986 [38.8]	993 [39.1]
L700	℄ OF FRONT AXLE TO REAR OF CAB	2532 [99.7]	2532 [99.7]	2532 [99.7]	2532 [99.7]
L705	℄ REAR AXLE TO END OF FRAME (INCLUDES REAR BUMPER MOUNTING BRACKET)	1039 [40.9]	1031 [40.6]	1039 [40.9]	1031 [40.6]
W703	FRAME RAIL WIDTH	66 [2.6]	66 [2.6]	66 [2.6]	66 [2.6]
W704	REAR FRAM WIDTH	1001 [39.4]	1001 [39.4]	1001 [39.4]	1001 [39.4]

PICKUP BODY

CODE	DESCRIPTION	LWB F-150 4x2	LWB F-150 4x4	SWB F-150 4x2	SWB F-150 4x4
NOMINAL CARGO BODY SIZE		8 FT.		6.5 FT.	
H703	Z REFERENCE LINE TO CARGO BODY FLOOR	424 [16.7]	424 [16.7]	424 [16.7]	424 [16.7]
H704	TOP OF FLOOR TO ℄ OF FUEL FILLER	170 [6.7]	170 [6.7]	170 [6.7]	170 [6.7]
H705	REAR BUMPER HEIGHT	221 [8.7]	221 [8.7]	221 [8.7]	221 [8.7]
—	REAR BUMPER WIDTH (NOT SHOWN)	1872 [73.7]	1872 [73.7]	1872 [73.7]	1872 [73.7]
H706	BOTTOM OF REAR BUMPER TO TOP OF BUMPER HITCH PLATE	51 [2.0]	51 [2.0]	51 [2.0]	51 [2.0]
H712	Z REFERENCE LINE TO BOTTOM OF REAR BUMPER	178 [7.0]	178 [7.0]	178 [7.0]	178 [7.0]
H769	TOP OF FLOOR TO TOP OF CAB @ ℄ REAR WHEELS	1092 [43.0]	1092 [43.0]	1092 [43.0]	1092 [43.0]
L504	CAB TO PICKUP BODY	13.5 [0.5]	13.5 [0.5]	13.5 [0.5]	13.5 [0.5]
L551	BOX OVERALL LENGTH TO OPEN TAILGATE	3068 [120.8]	3068 [120.8]	2601 [102.4]	2601 [102.4]
L558	℄ REAR AXLE TO ℄ FUEL FILLER	505 [19.9]	513 [20.2]	505 [19.9]	513 [20.2]
L559	OPEN TAILGATE	498 [19.6]	498 [19.6]	498 [19.6]	498 [19.6]

CAB

CODE	DESCRIPTION	4x2	4x4
H61	EFFECTIVE HEAD ROOM –FRONT	1036 [40.8]	1036 [40.8]
H63	EFFECTIVE HEAD ROOM –REAR	960 [37.8]	960 [37.8]
H159A	WINDSHIELD HEIGHT	889 [35.0]	889 [35.0]
H430	Z REFERENCE LINE TO TOP OF CAB	1516 [59.7]	1516 [59.7]
H505	MAXIMUM INTERIOR CARGO HEIGHT (REAR SEAT)	1166 [45.9]	1166 [45.9]
H701	FRONT BUMPER HEIGHT	259 [10.2]	282 [11.1]
H711	Z REFERENCE LINE TO BOTTOM OF FRONT BUMPER (LESS LOWER VALANCE)	178 [7.0]	142 [5.6]
TL23	FORWARD SEAT TRACK	159 [6.3]	159 [6.3]
TL25	TRUE TRACK TRAVEL LENGTH	220 [8.7]	220 [8.7]
TL28	TRUE TRACK TRAVEL LENGTH REAR OF SgRP	40 [1.6]	40 [1.6]
L34	EFFECTIVE LEG ROOM –FRONT	1039 [40.9]	1039 [40.9]
L50	H-POINT COUPLE DISTANCE	719 [28.3]	719 [28.3]
L51	EFFECTIVE LEG ROOM –REAR	818 [32.2]	818 [32.2]
L204	BACK OF FRONT SEAT TO BACK PANEL	571 [22.5]	571 [22.5]
L703	℄ FRONT AXLE TO COWL POINT	345 [13.6]	345 [13.6]
W3	SHOULDER ROOM –FRONT	1620 [63.8]	1620 [63.8]
W4	SHOULDER ROOM –REAR	1620 [63.8]	1620 [63.8]
W5	HIP ROOM –FRONT	1549 [61.0]	1549 [61.0]
W6	HIP ROOM –REAR	1605 [63.2]	1605 [63.2]
W20	SgRP (Y)	-439 [-17.3]	-439 [-17.3]
W103	VEHICLE WIDTH	2014 [79.3]	2019 [79.4]
W410	OVERALL WIDTH WITH STANDARD MIRRORS	2278 [89.7]	2278 [89.7]
W702	FRONT BUMPER WIDTH	1880 [74.0]	1892 [74.5]
V16	REAR CARGO VOLUME WITH REAR SEAT CUSHION FOLDED UP –LITRES/CU.FT.	1082/ 38.2	1082/ 38.2

NOTE –[] DIMENSIONS ARE INCHES.

DIMENSIONAL DATA
F-150 REGULAR CAB FLARESIDE 4X2/4X4

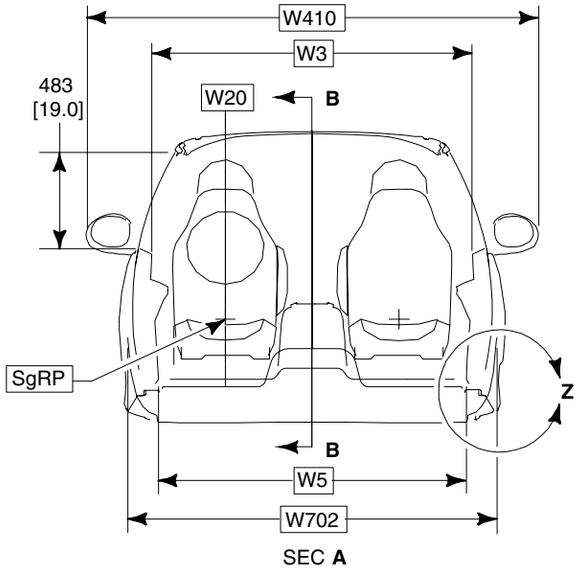

SEC **A**

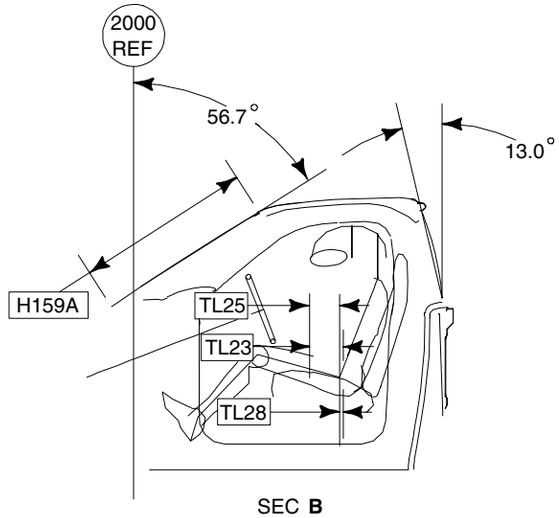

SEC **B**

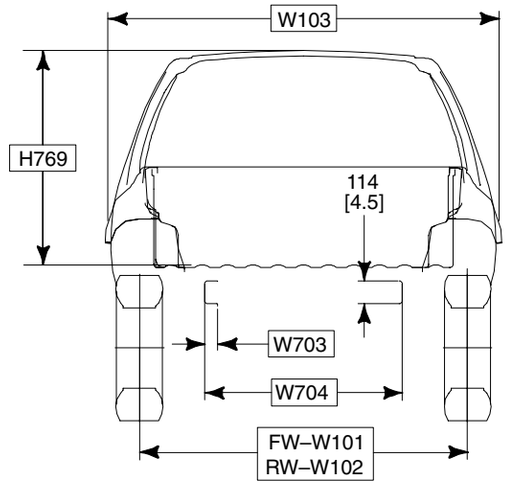

SEC **C**

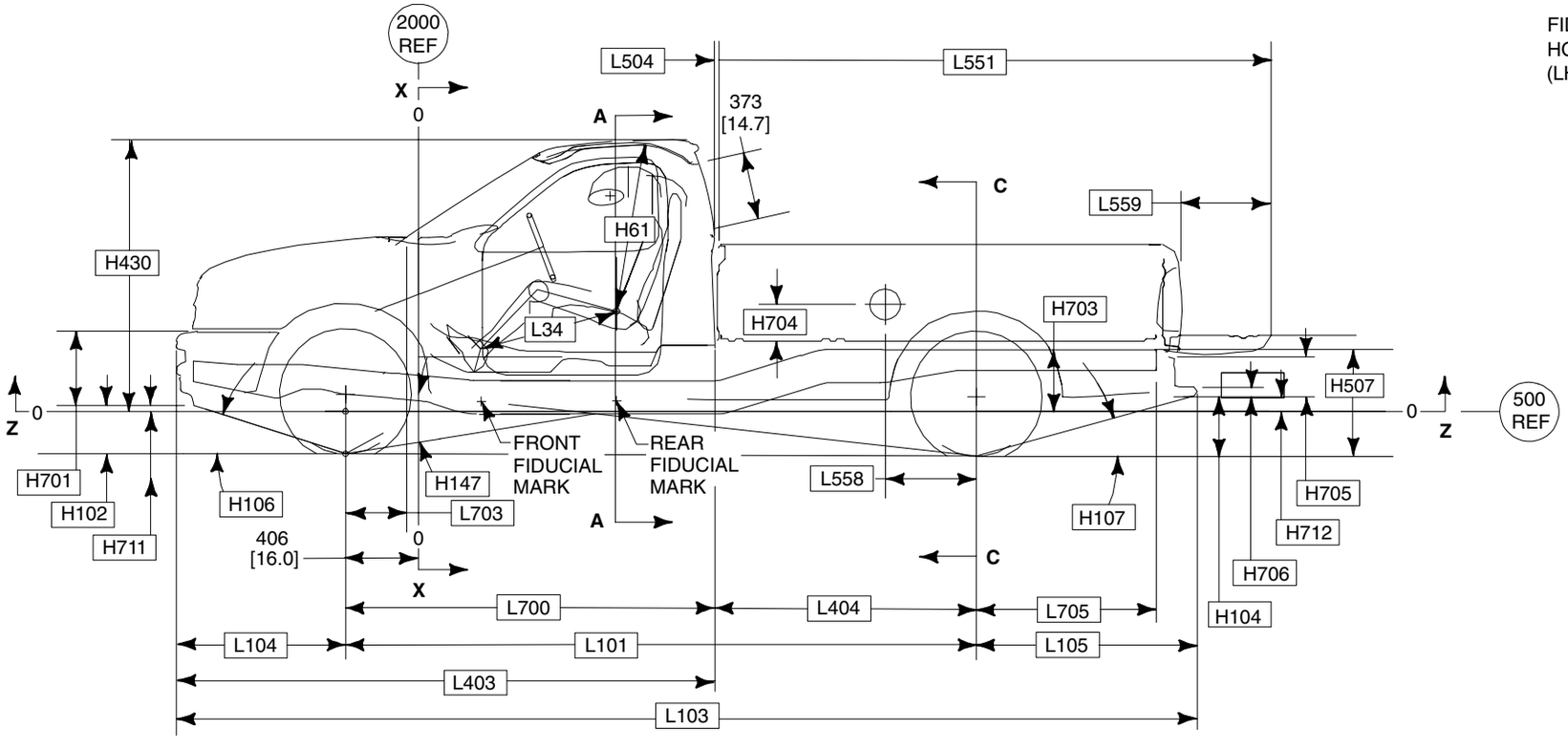

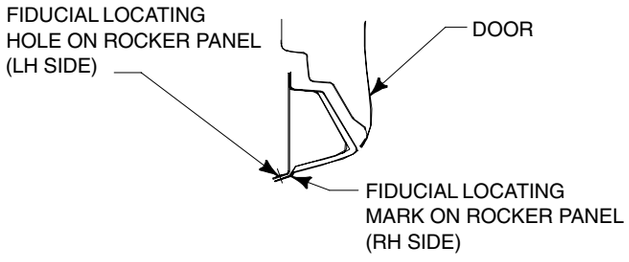

VIEW IN CIRCLE **Z**

FIDUCIAL COORDINATE CHART				
PT.		X	Y	Z
FRONT	RH	2350 [92.5]	829 [32.6]	556 [21.8]
	LH	———	———	———
REAR	RH	3105 [122.2]	829 [32.6]	554 [21.8]
	LH	3105 [122.2]	829 [32.6]	554 [21.8]

NOTES — [ ] DIMENSIONS ARE INCHES.
— **CH, LH, F, R, FW, RW** DIMENSIONS, SEE PAGE 141.
— TIRE DATA, PAGE 143.
— INTERIOR BOX DIMENSIONS, PAGE 137.
— SgRP X AND Z LOCATIONS, PAGE 31.
— X AND Z REFERENCE LINE LOCATIONS, PAGE 139.
— REFER TO PAGE 126 FOR FIDUCIAL LOCATIONS.

DIMENSIONAL DATA
F-150 REGULAR CAB FLARESIDE 4X2/4X4

CHASSIS

CODE	DESCRIPTION	SWB 4X2	SWB 4X4
H102	BOTTOM OF FRONT BUMPER VALANCE TO GROUND @ CURB	261 [10.3]	343 [13.5]
H104	BOTTOM OF REAR BUMPER TO GROUND @ CURB	341 [13.4]	458 [18.0]
H106	ANGLE OF APPROACH	18.5°	26.0°
H107	ANGLE OF DEPARTURE	16.2°	19.9°
H147	RAMP BREAKOVER ANGLE	17.4°	21.7°
H507	TOP OF FRAME TO GROUND	844 [33.2]	844 [33.2]
L101	WHEELBASE	3046 [119.9]	3053 [120.2]
L103	OVERALL LENGTH — WITH STANDARD REAR STEP BUMPER	5255 [206.9]	5263 [207.2]
L104	FRONT OVERHANG	983 [38.7]	983 [38.7]
L105	REAR OVERHANG — WITH STANDARD REAR STEP BUMPER	1227 [48.3]	1227 [48.3]
L403	FRONT BUMPER TO REAR OF CAB	3043 [119.8]	3043 [119.8]
L404	CAB TO ℄ OF REAR AXLE	985 [38.8]	993 [39.1]
L700	℄ OF FRONT AXLE TO REAR OF CAB	2060 [81.1]	2060 [81.1]
L705	℄ REAR AXLE TO END OF FRAME (INCLUDES REAR BUMPER MOUNTING BRACKET)	1039 [40.9]	1031 [40.6]
W703	FRAME RAIL WIDTH	66 [2.6]	66 [2.6]
W704	REAR FRAME WIDTH	1001 [39.4]	1001 [39.4]

PICKUP BODY

CODE	DESCRIPTION	4X2	4X4
	NOMINAL CARGO BODY SIZE	6.5 FT.	
H703	Z REFERENCE LINE TO CARGO BODY FLOOR	424 [16.7]	424 [16.7]
H704	TOP OF FLOOR TO ℄ OF FUEL FILLER	170 [6.7]	170 [6.7]
H705	REAR BUMPER HEIGHT	221 [8.7]	221 [8.7]
—	REAR BUMPER WIDTH (NOT SHOWN)	1760 [69.3]	1760 [69.3]
H706	BOTTOM OF REAR BUMPER TO TOP OF BUMPER HITCH PLATE	51 [2.0]	51 [2.0]
H712	Z REFERENCE LINE TO BOTTOM OF REAR BUMPER	74 [2.9]	74 [2.9]
H769	TOP OF FLOOR TO TOP OF CAB @ ℄ REAR WHEELS	1092 [43.0]	1092 [43.0]
L504	CAB TO PICKUP BODY	30 [1.2]	30 [1.2]
L551	OVERALL LENGTH TO OPEN TAILGATE	2603 [102.5]	2603 [102.5]
L558	℄ REAR AXLE TO ℄ FUEL FILLER	505 [19.9]	513 [20.2]
L559	OPEN TAILGATE	498 [19.6]	498 [19.6]

CAB

CODE	DESCRIPTION	4X2	4X4
H61	EFFECTIVE HEAD ROOM	1036 [40.8]	1036 [40.8]
H159A	WINDSHIELD HEIGHT	889 [35.0]	889 [35.0]
H430	Z REFERENCE LINE TO TOP OF CAB	1516 [59.7]	1516 [59.7]
H701	FRONT BUMPER HEIGHT	259 [10.2]	282 [11.1]
H711	Z REFERENCE LINE TO BOTTOM OF FRONT BUMPER (LESS LOWER VALANCE)	178 [7.0]	142 [5.6]
TL23	FORWARD SEAT TRACK	159 [6.3]	159 [6.3]
TL25	TRUE TRACK TRAVEL LENGTH	220 [8.7]	220 [8.7]
TL28	TRUE TRACK TRAVEL LENGTH REAR OF SgRP	40 [1.6]	40 [1.6]
L34	EFFECTIVE LEG ROOM	1039 [40.9]	1039 [40.9]
L703	℄ FRONT AXLE TO COWL POINT	345 [13.6]	345 [13.6]
W3	SHOULDER ROOM	1620 [63.8]	1620 [63.8]
W5	HIP ROOM	1549 [61.0]	1549 [61.0]
W20	SgRP (Y)	–439 [–17.3]	–439 [–17.3]
W103	VEHICLE WIDTH	2014 [79.3]	2019 [79.4]
W410	OVERALL WIDTH WITH STANDARD MIRRORS	2278 [89.7]	2278 [89.7]
W702	FRONT BUMPER WIDTH	1880 [74.0]	1892 [74.5]

NOTE — [ ] DIMENSIONS ARE INCHES.

DIMENSIONAL DATA
F-150 SUPERCAB FLARESIDE 4X2/4X4

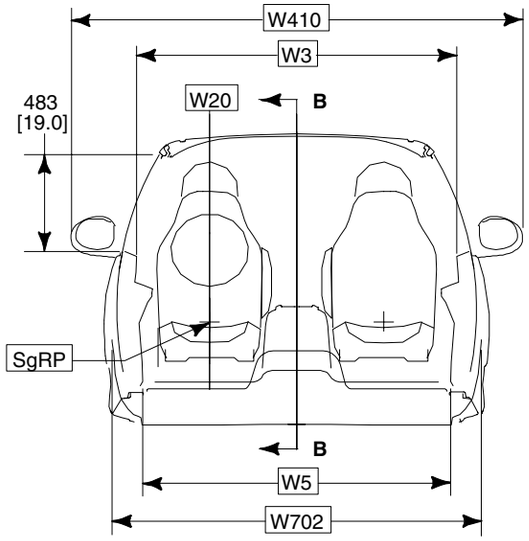

SEC **A**

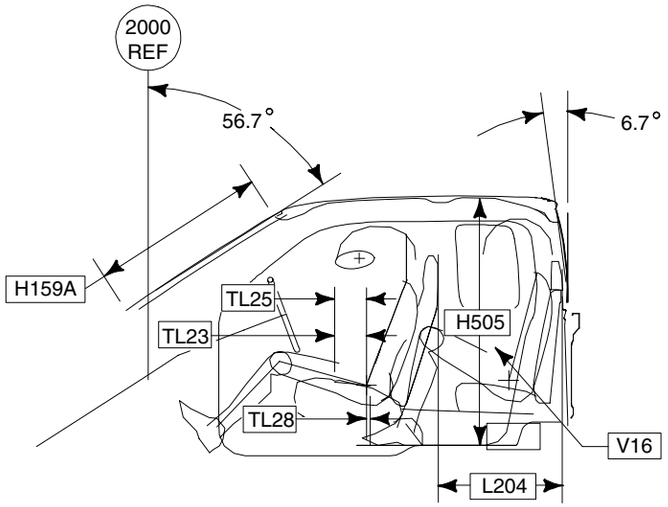

SEC **B**

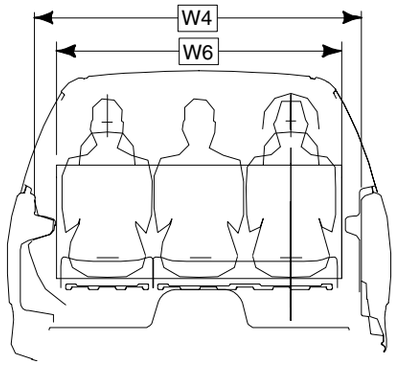

SEC **C**

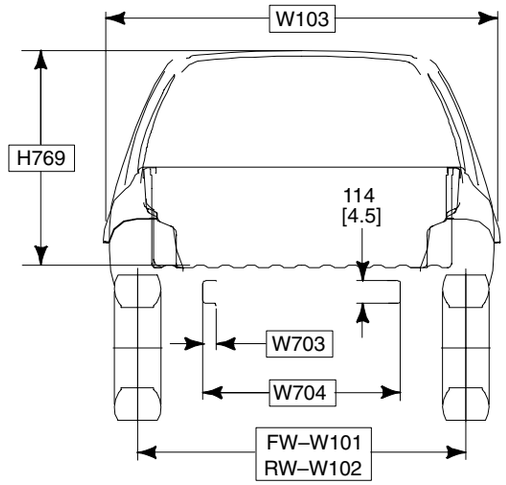

SEC **D**

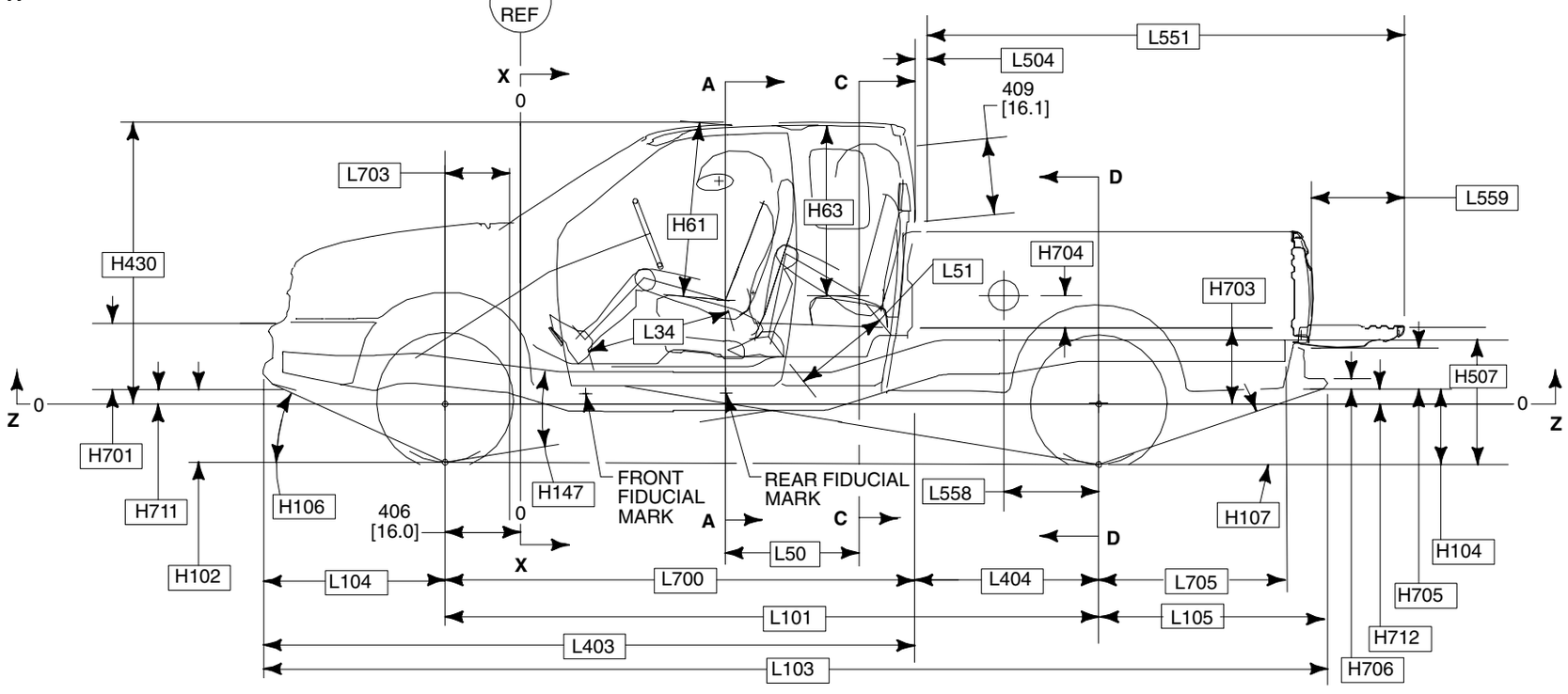

BB0012

NOTES — [ ] DIMENSIONS ARE INCHES.
— **CH, LH, F, R, FW, RW** DIMENSIONS, SEE PAGE 141.
— TIRE DATA, PAGE 143.
— INTERIOR BOX DIMENSIONS, PAGE 137.
— SgRP X AND Z LOCATIONS, PAGE 31.
— X AND Z REFERENCE LINE LOCATIONS, PAGE 139.
— REFER TO PAGE 128 FOR FIDUCIAL LOCATIONS.

DIMENSIONAL DATA
F-150 SUPERCAB FLARESIDE 4X2/4X4

2003
MODEL YEAR

CHASSIS

CODE	DESCRIPTION	SWB 4X2	SWB 4X4
H102	BOTTOM OF FRONT BUMPER VALANCE TO GROUND @ CURB	256 [10.1]	340 [13.4]
H104	BOTTOM OF REAR BUMPER TO GROUND @ CURB	339 [13.4]	451 [17.7]
H106	ANGLE OF APPROACH	18.1°	25.8°
H107	ANGLE OF DEPARTURE	16.1°	19.8°
H147	RAMP BREAKOVER ANGLE	14.7°	18.7°
H507	TOP OF FRAME TO GROUND	844 [33.2]	844 [33.2]
L101	WHEELBASE	3518 [138.5]	3526 [138.8]
L103	OVERALL LENGTH –WITH STANDARD REAR STEP BUMPER	5728 [225.5]	5735 [225.8]
L104	FRONT OVERHANG	983 [38.7]	983 [38.7]
L105	REAR OVERHANG –WITH STANDARD REAR STEP BUMPER	1227 [48.3]	1227 [48.3]
L403	FRONT BUMPER TO REAR OF CAB	3515 [138.4]	3515 [138.4]
L404	CAB TO ℄ OF REAR AXLE	985 [38.8]	993 [39.1]
L700	℄ OF FRONT AXLE TO REAR OF CAB	2533 [99.7]	2533 [99.7]
L705	℄ REAR AXLE TO END OF FRAME (INCLUDES REAR BUMPER MOUNTING BRACKET)	1039 [40.9]	1031 [40.6]
W703	FRAME RAIL WIDTH	66 [2.6]	66 [2.6]
W704	REAR FRAME WIDTH	1001 [39.4]	1001 [39.4]

PICKUP

CODE	DESCRIPTION	4X2	4X4
	NOMINAL CARGO BODY SIZE	6.5 FT.	
H703	Z REFERENCE LINE TO CARGO BODY FLOOR	424 [16.7]	424 [16.7]
H704	TOP OF FLOOR TO ℄ OF FUEL FILLER	170 [6.7]	170 [6.7]
H705	REAR BUMPER HEIGHT	221 [8.7]	221 [8.7]
—	REAR BUMPER WIDTH (NOT SHOWN)	1760 [69.3]	1760 [69.3]
H706	BOTTOM OF REAR BUMPER TO TOP OF BUMPER HITCH PLATE	51 [2.0]	51 [2.0]
H712	Z REFERENCE LINE TO BOTTOM OF REAR BUMPER	74 [2.9]	74 [2.9]
H769	TOP OF FLOOR TO TOP OF CAB @ ℄ REAR WHEELS	1092 [43.0]	1092 [43.0]
L504	CAB TO PICKUP BODY	13 [0.5]	13 [0.5]
L551	OVERALL LENGTH TO OPEN TAILGATE	2603 [102.5]	2603 [102.5]
L558	℄ REAR AXLE TO ℄ FUEL FILLER	505 [19.9]	513 [20.2]
L559	OPEN TAILGATE	498 [19.6]	498 [19.6]

CAB

CODE	DESCRIPTION	4X2	4X4
H61	EFFECTIVE HEAD ROOM –FRONT	1036 [40.8]	1036 [40.8]
H63	EFFECTIVE HEAD ROOM –REAR	960 [37.8]	960 [37.8]
H159A	WINDSHIELD HEIGHT	889 [35.0]	889 [35.0]
H430	Z REFERENCE LINE TO TOP OF CAB	1516 [59.7]	1516 [59.7]
H505	MAXIMUM CARGO HEIGHT	1166 [45.9]	1166 [45.9]
H701	FRONT BUMPER HEIGHT	259 [10.2]	282 [11.1]
H711	Z REFERENCE LINE TO BOTTOM OF FRONT BUMPER (LESS LOWER VALANCE)	178 [7.0]	142 [5.6]
TL23	FORWARD SEAT TRACK	159 [6.3]	159 [6.3]
TL25	TRUE TRACK TRAVEL LENGTH	220 [8.7]	220 [8.7]
TL28	TRUE TRACK TRAVEL LENGTH REAR OF SgRP	40 [1.6]	40 [1.6]
L34	EFFECTIVE LEG ROOM –FRONT	1039 [40.9]	1039 [40.9]
L50	H-POINT COUPLE DISTANCE	719 [28.3]	719 [28.3]
L51	EFFECTIVE LEG ROOM –REAR	818 [32.2]	818 [32.2]
L703	℄ FRONT AXLE TO COWL POINT	345 [13.6]	345 [13.6]
W3	SHOULDER ROOM –FRONT	1620 [63.8]	1620 [63.8]
W4	SHOULDER ROOM –REAR	1620 [63.8]	1620 [63.8]
W5	HIP ROOM –FRONT	1549 [61.0]	1549 [61.0]
W6	HIP ROOM –REAR	1605 [63.2]	1605 [63.2]
W20	SgRP (Y)	–439 [–17.3]	–439 [–17.3]
W103	VEHICLE WIDTH	2014 [79.3]	2019 [79.4]
W410	OVERALL WIDTH WITH STANDARD MIRRORS	2278 [89.7]	2278 [89.7]
W702	FRONT BUMPER WIDTH	1880 [74.0]	1892 [74.5]
V16	REAR CARGO VOLUME WITH REAR SEAT CUSHION FOLDED UP –LITRES/CU.FT.	1082/ 38.2	1082/ 38.2

NOTE –[ ] DIMENSIONS ARE INCHES.

DIMENSIONAL DATA
F-150 SUPERCREW PICKUP 4X2/4X4

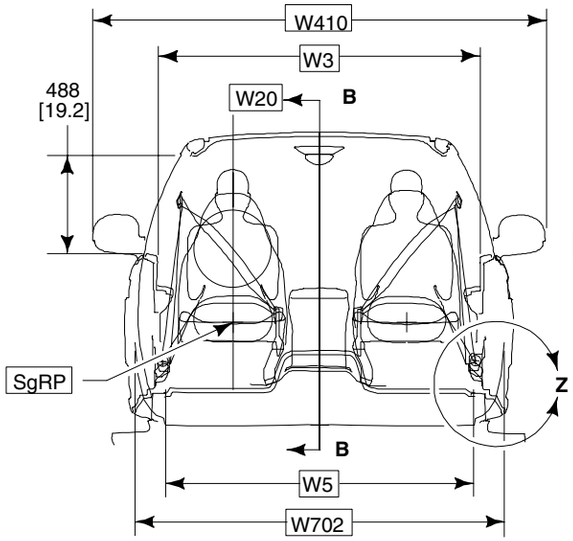

SEC **A**

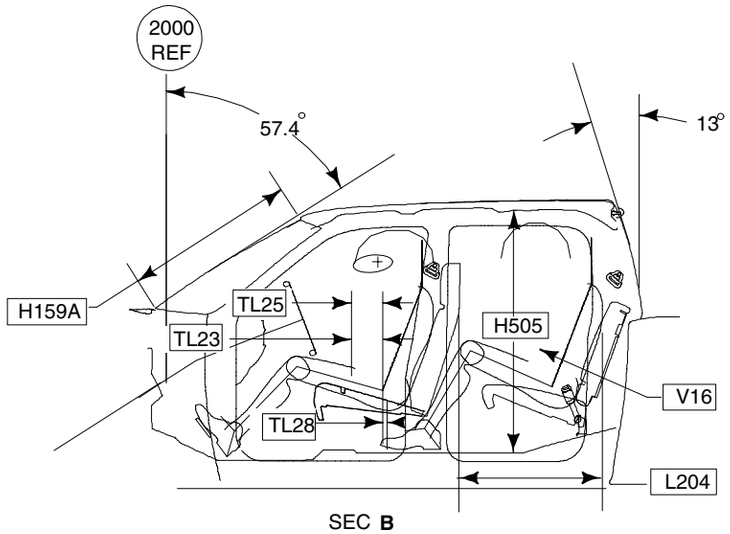

SEC **B**

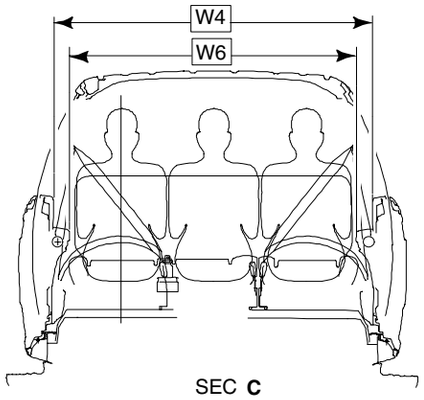

SEC **C**

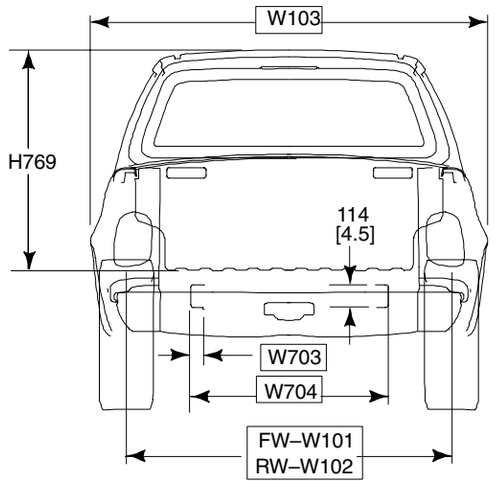

SEC **D**

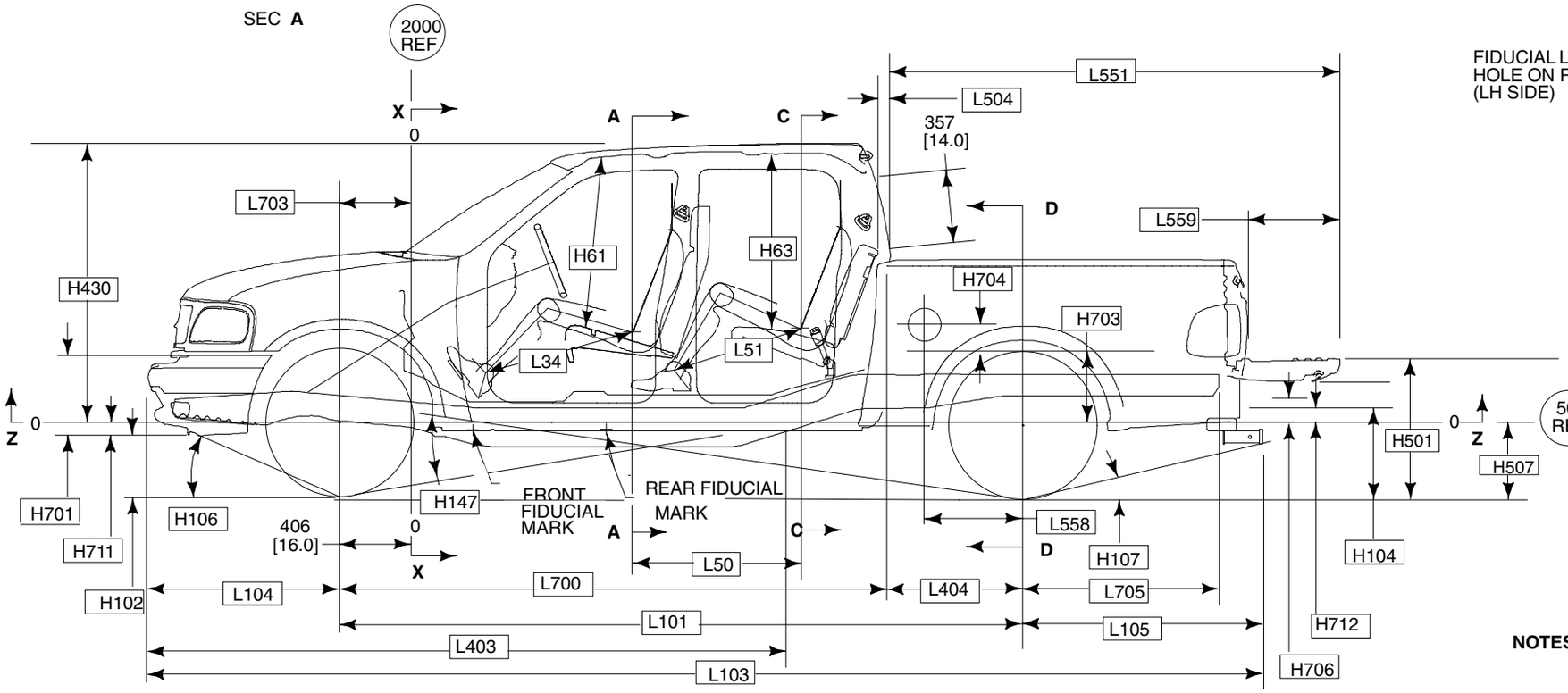

BB0552

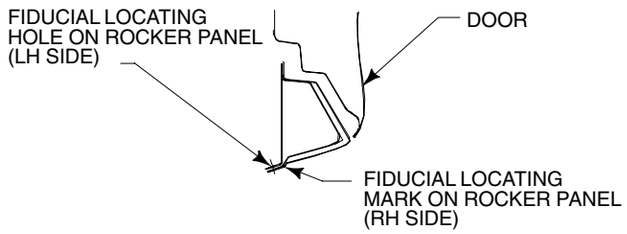

VIEW IN CIRCLE Z

FIDUCIAL COORDINATE CHART				
PT		X	Y	Z
REAR	R_H	3105	829	554
	L_H	3105	829	554

NOTES — [ ] DIMENSIONS ARE INCHES.
— **CH, LH, F, R, FW, RW** DIMENSIONS, SEE PAGE 142.
— TIRE DATA, PAGE 143.
— INTERIOR BOX DIMENSIONS, PAGE 136.

DIMENSIONAL DATA
F-150 SUPERCREW PICKUP 4X2/4X4

2003
MODEL YEAR

CHASSIS

CODE	DESCRIPTION	SWB 4X2	SWB 4X4
H102	BOTTOM OF FRONT BUMPER VALANCE TO GROUND @ CURB	306 [12.0]	380 [15.0]
H104	BOTTOM OF REAR BUMPER TO GROUND @ CURB	355 [14.0]	455 [17.9]
H106	ANGLE OF APPROACH	21.7°	28.5°
H107	ANGLE OF DEPARTURE	16.5°	21.7°
H147	RAMP BREAKOVER ANGLE	14.7°	18.7°
H507	TOP OF FRAME TO GROUND (DESIGN)	841 [33.1]	841 [33.1]
L101	WHEELBASE	3518 [138.5]	3525 [138.8]
L103	OVERALL LENGTH –WITH STANDARD REAR STEP BUMPER	5738 [225.9]	5745 [226.2]
L104	FRONT OVERHANG	983 [38.7]	983 [38.7]
L105	REAR OVERHANG –WITH STANDARD REAR STEP BUMPER	1238 [48.7]	1238 [48.7]
L403	FRONT BUMPER TO REAR OF CAB	3816 [150.2]	3816 [150.2]
L404	CAB TO ℄ OF REAR AXLE	699 [27.5]	706 [27.8]
L700	℄ OF FRONT AXLE TO REAR OF CAB	2819 [111.0]	2819 [111.0]
L705	℄ REAR AXLE TO END OF FRAME (INCLUDES REAR BUMPER MOUNTING BRACKET)	1039 [40.9]	1031 [40.6]
W703	FRAME RAIL WIDTH	66 [2.6]	66 [2.6]
W704	REAR FRAME WIDTH	1001 [39.4]	1001 [39.4]

PICKUP BODY

CODE	DESCRIPTION	4X2	4X4
	NOMINAL CARGO BODY SIZE	6.5 FT.	
H703	Z REFERENCE LINE TO CARGO BODY FLOOR	421 [16.6]	421 [16.6]
H704	TOP OF FLOOR TO ℄ OF FUEL FILLER	218 [8.6]	218 [8.6]
H705	REAR BUMPER HEIGHT	225 [8.9]	225 [8.9]
—	REAR BUMPER WIDTH (NOT SHOWN)	1755 [69.1]	1755 [69.1]
H706	BOTTOM OF REAR BUMPER TO TOP OF BUMPER HITCH PLATE	59 [2.3]	59 [2.3]
H712	Z REFERENCE LINE TO BOTTOM OF REAR BUMPER	129 [5.0]	129 [5.0]
H769	TOP OF FLOOR TO TOP OF CAB @ ℄ REAR WHEELS	1108 [43.6]	1108 [43.6]
L504	CAB TO PICKUP BODY	13 [0.5]	13 [0.5]
L551	OVERALL LENGTH TO OPEN TAILGATE	2266 [89.2]	2266 [89.2]
L558	℄ REAR AXLE TO ℄ FUEL FILLER	508 [20.0]	508 [20.0]
L559	OPEN TAILGATE	480 [18.9]	480 [18.9]

CAB

CODE	DESCRIPTION	4X2	4X4
H61	EFFECTIVE HEAD ROOM –FRONT	1011 [39.8]	1011 [39.8]
H63	EFFECTIVE HEAD ROOM –REAR	1011 [39.8]	1011 [39.8]
H159A	WINDSHIELD HEIGHT	816 [32.1]	816 [32.1]
H430	Z REFERENCE LINE TO TOP OF CAB	1532 [60.3]	1532 [60.3]
H505	MAXIMUM INTERIOR CARGO HEIGHT (REAR SEAT)	970 [38.2]	970 [38.2]
H701	FRONT BUMPER HEIGHT	337 [13.3]	337 [13.3]
H711	Z REFERENCE LINE TO BOTTOM OF FRONT BUMPER (LESS LOWER VALANCE)	244 [9.6]	244 [9.6]
TL23	FORWARD SEAT TRACK	179 [7.0]	179 [7.0]
TL25	TRUE TRACK TRAVEL LENGTH	220 [8.7]	220 [8.7]
TL28	TRUE TRACK TRAVEL LENGTH REAR OF SgRP	40 [1.6]	40 [1.6]
L34	EFFECTIVE LEG ROOM –FRONT	1041 [41.0]	1041 [41.0]
L50	H-POINT COUPLE DISTANCE	865 [34.0]	865 [34.0]
L51	EFFECTIVE LEG ROOM –REAR	935 [36.8]	935 [36.8]
L204	BACK OF FRONT SEAT TO BACK PANEL	855 [33.6]	855 [33.6]
L703	℄ FRONT AXLE TO COWL POINT	345 [13.6]	345 [13.6]
W3	SHOULDER ROOM –FRONT	1618 [63.7]	1618 [63.7]
W4	SHOULDER ROOM –REAR	1615 [63.6]	1615 [63.6]
W5	HIP ROOM –FRONT	1518 [59.8]	1518 [59.8]
W6	HIP ROOM –REAR	1474 [58.0]	1474 [58.0]
W20	SgRP (Y)	–440 [–17.3]	–440 [–17.3]
W103	VEHICLE WIDTH	2008 [79.1]	2030 [79.9]
W410	OVERALL WIDTH WITH STANDARD MIRRORS	2293 [90.3]	2293 [90.3]
W702	FRONT BUMPER WIDTH	1900 [74.8]	1900 [74.8]
V16	REAR CARGO VOLUME WITH REAR SEAT BACK FOLDED DOWN –LITRES/CU.FT.	1219/ 43	1219/ 43

NOTE –[] DIMENSIONS ARE INCHES.

DIMENSIONS AND FEATURES
F-150 SUPERCREW PICKUP BOX

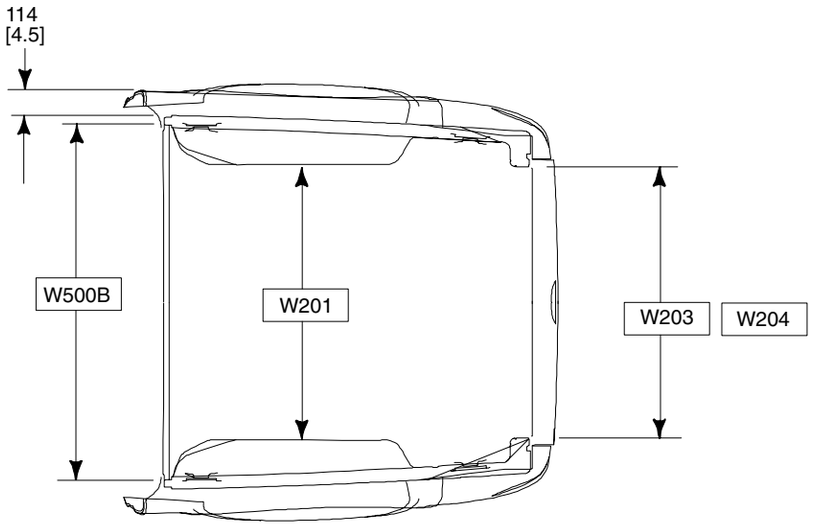

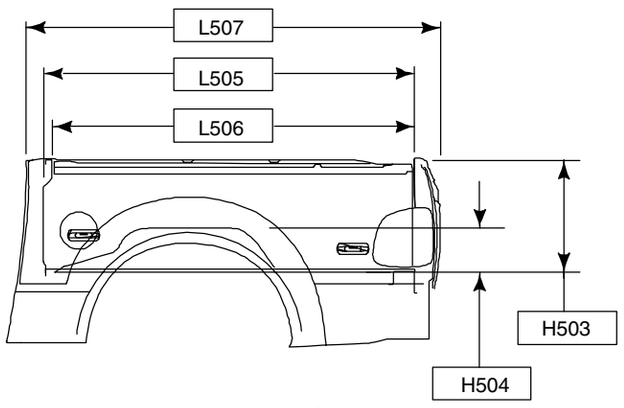

5 BOX

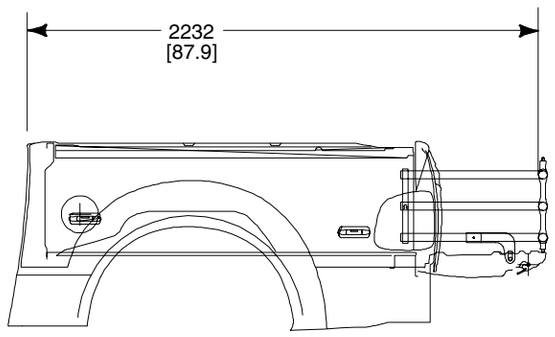

5 BOX WITH OPTIONAL BOX EXTENDER

CODE	DESCRIPTION	
	NOMINAL CARGO BODY SIZE	5 FT.
L505	CARGO BODY LENGTH @ FLOOR	1707 [67.2]
L506	CARGO BODY LENGTH @ TOP	1664 [65.5]
L507	CARGO BODY OVERALL LENGTH	1785 [70.2]
W201	CARGO WIDTH BETWEEN WHEELHOUSE	1270 [50.0]
W203	REAR OPENING WIDTH AT FLOOR	1253 [49.3]
W204	REAR OPENING WIDTH AT BELT	1253 [49.3]
W500B	CARGO BODY MAX. INSIDE WIDTH	1529 [60.2]
H503	CARGO BODY HEIGHT W/MOLDING	514 [20.2]
H504	WHEELHOUSE HEIGHT	243 [9.6]
V5	CARGO VOLUME - LITRES/CU.FT.	1308/46.2

BB0553

NOTE— [ ] DIMENSIONS ARE INCHES.

DIMENSIONS AND FEATURES
F-150 STYLESIDE PICKUP BOX

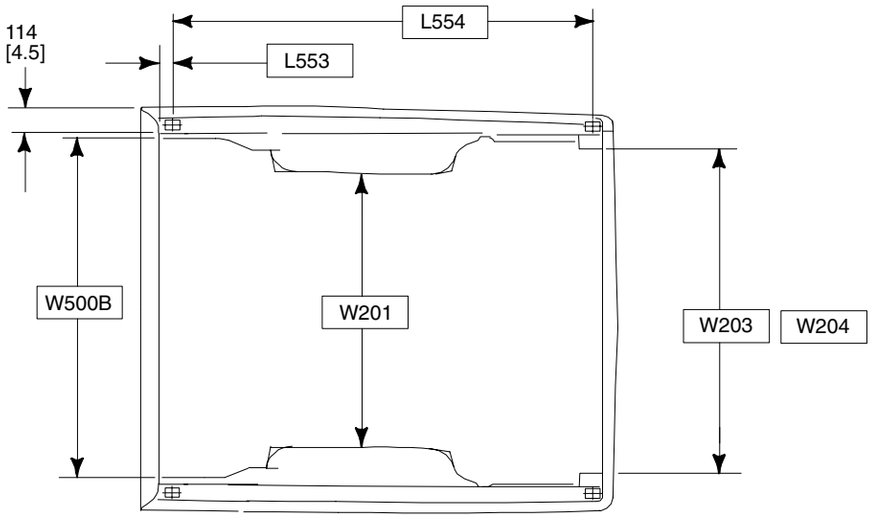

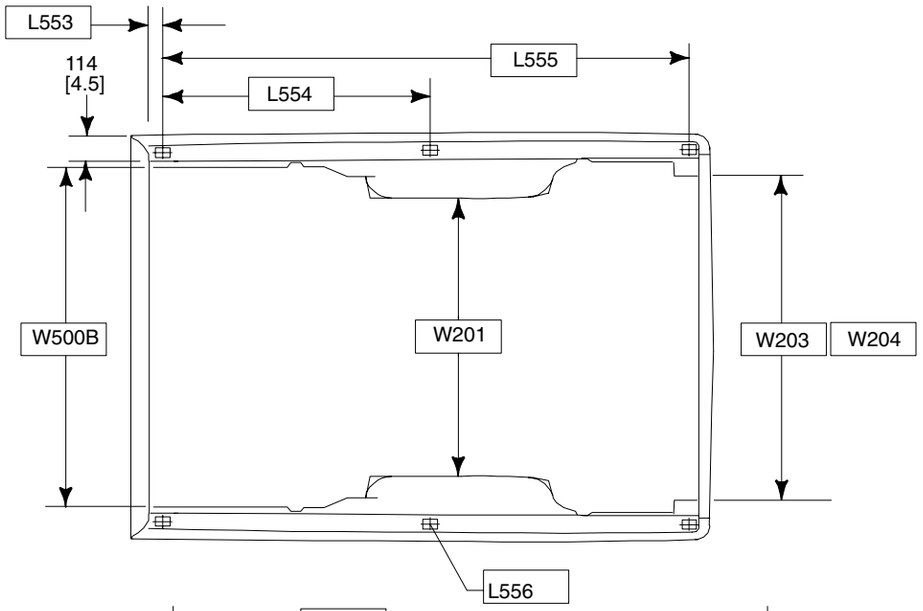

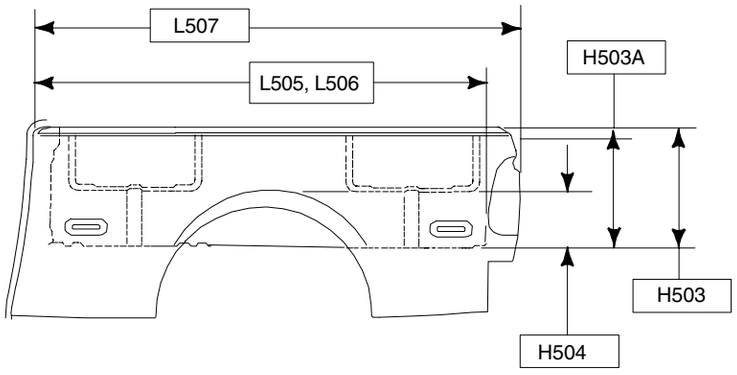

6-½′ BOX

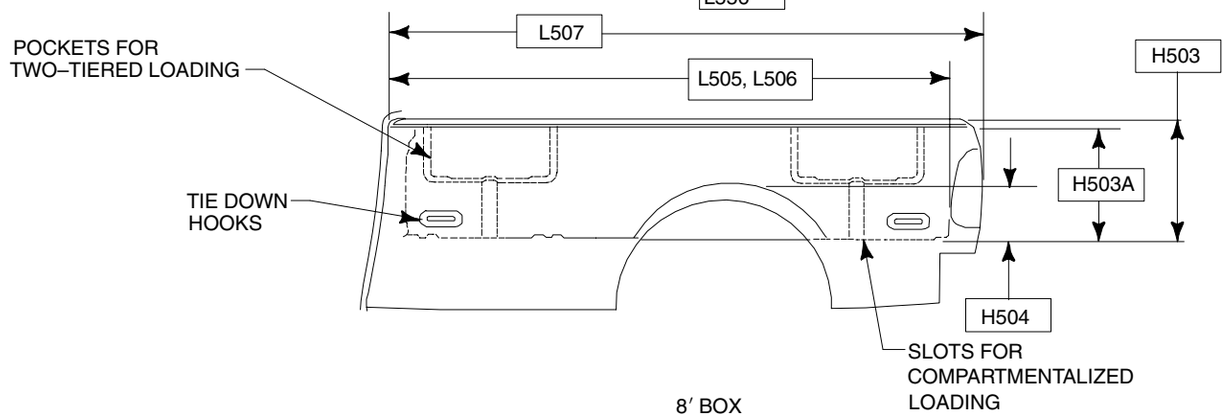

8′ BOX

CODE	DESCRIPTION	LWB	SWB
	NOMINAL CARGO BODY SIZE	8 FT.	6.5 FT
L505	CARGO BODY LENGTH @ FLOOR	2464 [97.0]	2001 [78.8]
L506	CARGO BODY LENGTH @ TOP	2443 [96.2]	1966 [77.4]
L507	CARGO BODY OVERALL LENGTH	2588 [101.9]	2118 [83.4]
L553	FRONT OF BOX TO ℄ STAKE #1	68 [2.7]	68 [2.7]
L554	℄ OF STAKE #1 TO STAKE #2	1191 [46.9]	1864 [73.4]
L555	℄ OF STAKE #1 TO STAKE #3	2354 [92.7]	—
L556	STAKE POCKET SIZE	61 X 44 [2.4 x 1.75]	61 X 44 [2.4 x 1.75]

CODE	DESCRIPTION	LWB	SWB
	NOMINAL CARGO BODY SIZE	8 FT.	6.5 FT.
W201	CARGO WIDTH AT WHEELHOUSE	1270 [50.0]	1270 [50.0]
W203	REAR OPENING WIDTH AT FLOOR	1532 [60.3]	1532 [60.3]
W204	REAR OPENING WIDTH AT BELT	1552 [61.1]	1577 [62.1]
W500B	CARGO BODY MAX. INSIDE WIDTH	1656 [65.2]	1656 [65.2]
H503	CARGO BODY HEIGHT W/MOLDING	508 [20.0]	508 [20.0]
H503A	CARGO BODY HEIGHT W/O MOLDING	500 [19.7]	500 [19.7]
H504	WHEELHOUSE HEIGHT	236 [9.3]	236 [9.3]
V5	CARGO VOLUME – LITRES/CU.FT.	2056/72.6	1659/58.6

BB0013

NOTE— [ ] DIMENSIONS ARE INCHES.

DIMENSIONS AND FEATURES
F-150 FLARESIDE PICKUP BOX

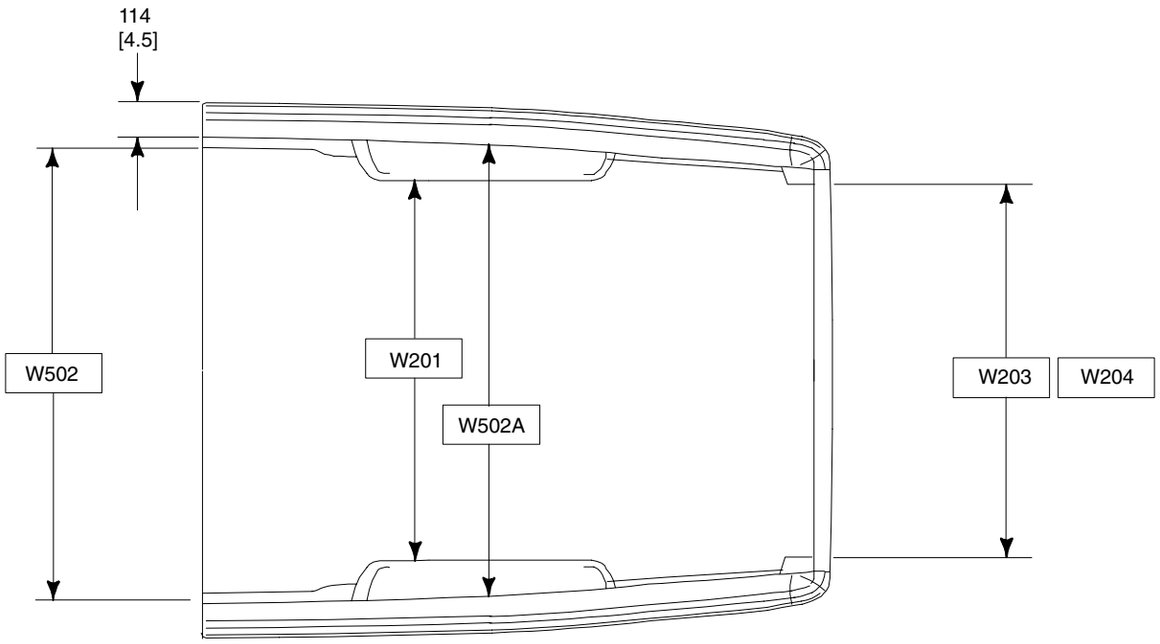

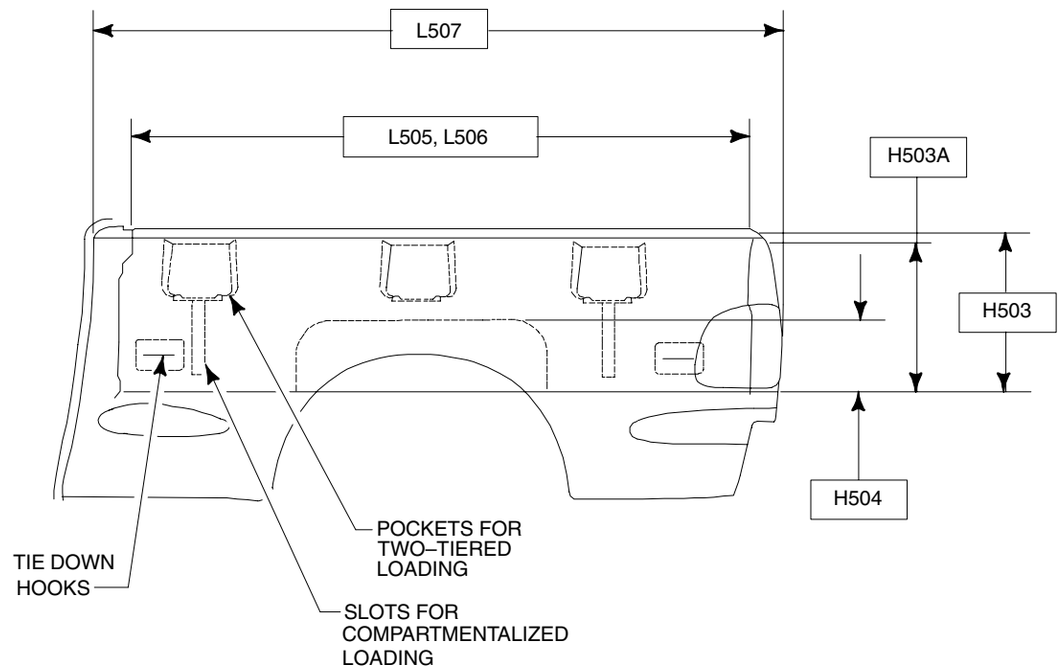

CODE	DESCRIPTION	SWB
	NOMINAL CARGO BODY SIZE	6.5 FT
L505	CARGO BODY LENGTH @ FLOOR	2001 [78.8]
L506	CARGO BODY LENGTH @ TOP	1966 [77.4]
L507	CARGO BODY OVERALL LENGTH	2296 [90.4]
W201	CARGO WIDTH AT WHEELHOUSE	1270 [50.0]
W203	REAR OPENING WIDTH AT FLOOR	1250 [49.2]
W204	REAR OPENING WIDTH AT BELT	1300 [51.2]
W502	CARGO BODY MAX. INSIDE WIDTH	1516 [59.7]
W502A	CARGO BODY MAX. WIDTH INSIDE BOX AT ℄ OF REAR AXLE	1463 [57.6]
H503	CARGO BODY HEIGHT W/ MOLDING	508 [20.0]
H503A	CARGO BODY HEIGHT W/O MOLDING	472 [18.6]
H504	WHEELHOUSE HEIGHT	190 [7.5]
V5	CARGO VOLUME – LITRES/CU.FT.	1421/50.2

NOTE— [ ] DIMENSIONS ARE INCHES.

F-150 DATUM LINE LOCATIONS

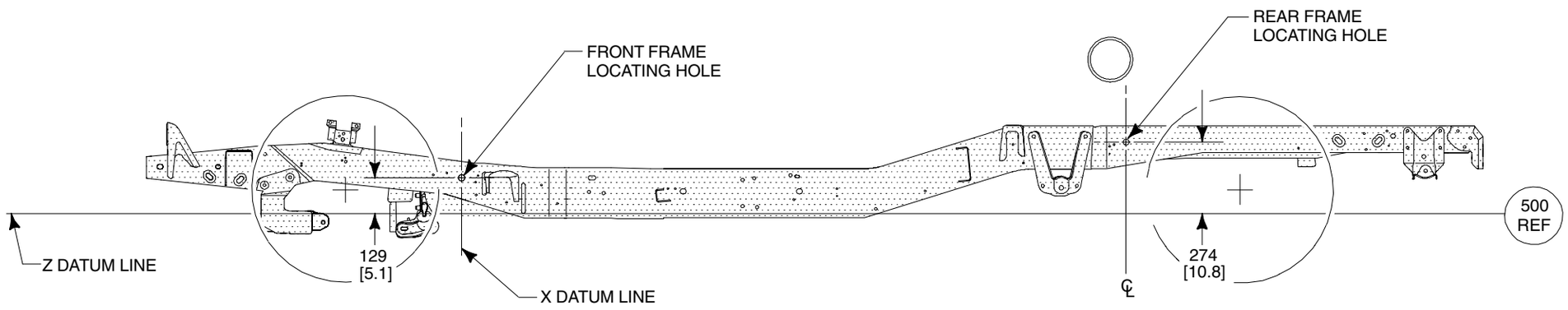

BB0480

NOTE— [ ] DIMENSIONS ARE INCHES.

FUEL AND VAPOR SYSTEM TYPICAL FOR ALL LENGTHS OF F-150

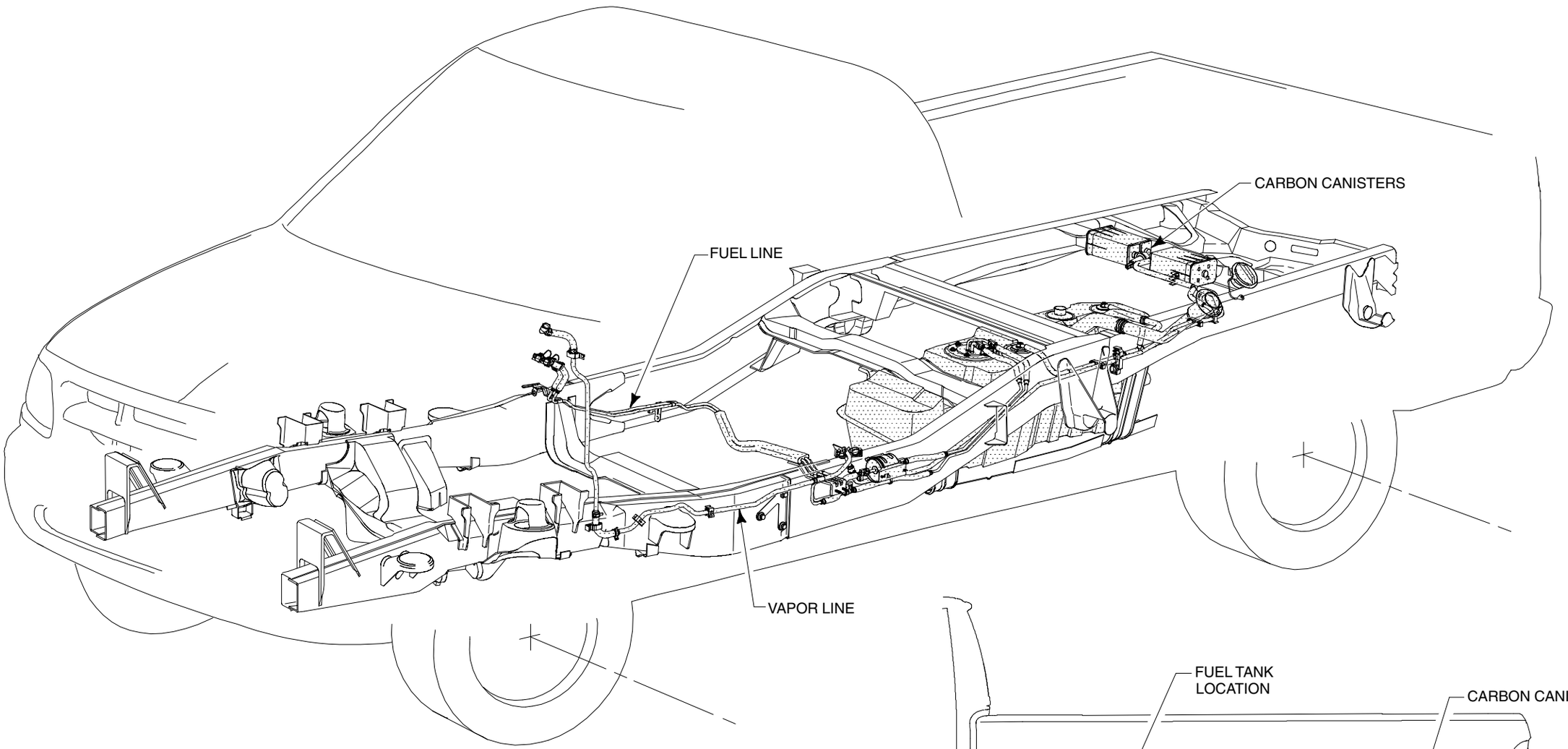

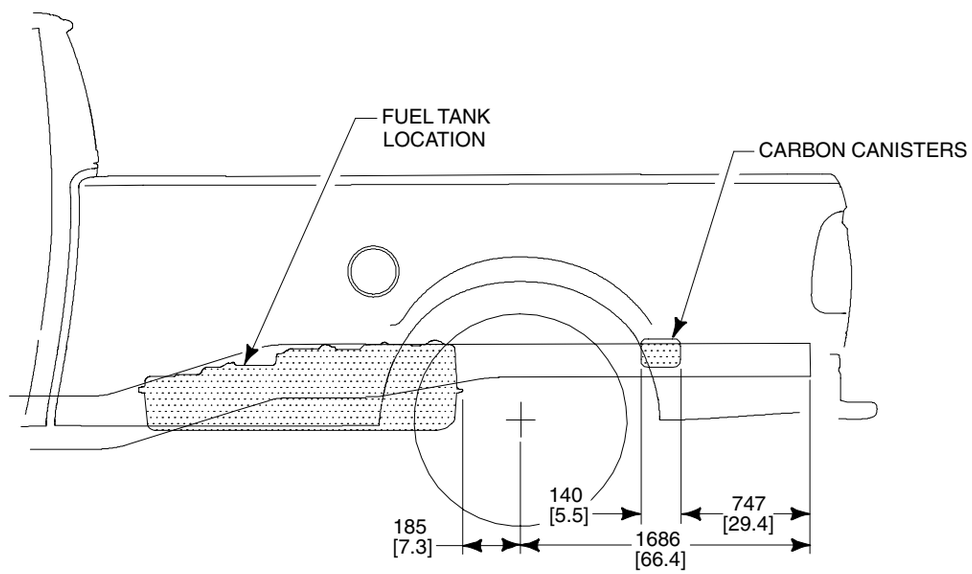

BB0015

NOTE— [ ] DIMENSIONS ARE INCHES.

F-150 REGULAR/SUPERCAB
AXLE/TIRE/VEHICLE HEIGHT DATA

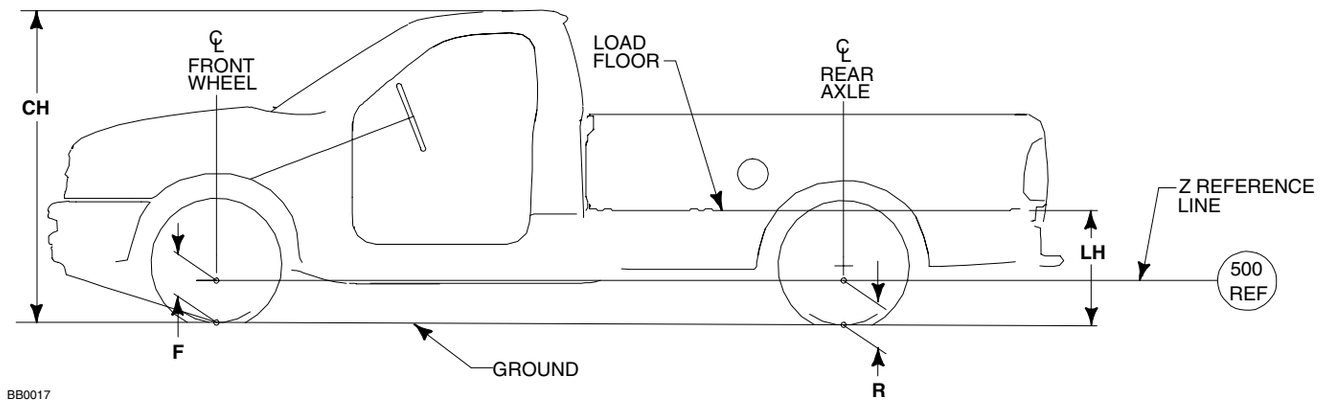

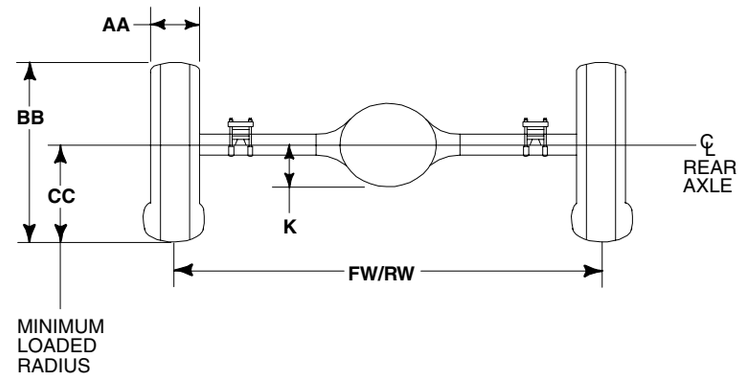

Model	WB inches	GVWR pounds	Base Tire	F Height @ Front Wheel (1)(2) mm [in]		R Height @ Rear Axle (1)(2) mm [in]		LH (1)(2) mm [in]		CH (1)(2) mm [in]		K mm [in]	AA mm [in]	BB mm [in]	CC mm [in]	FW mm [in]	RW mm [in]
				Height at Base Curb Weight	Loaded Height @ Spring Rating	Height at Base Curb Weight	Loaded Height @ Spring Rating	Empty	Loaded	Empty	Loaded						
F-150 Regular Cab 4x2 Styleside	119.9	6050	P255/70R-16SL	254 [10.0]	236 [9.3]	343 [13.5]	249 [9.8]	843 [33.2]	691 [27.2]	1864 [73.4]	1778 [70.0]	142 [5.6]	269 [10.6]	777 [30.6]	345 [13.6]	1661 [65.4]	1661 [65.4]
	138.5	6050	P235/70R-16SL	256 [10.1]	236 [9.3]	353 [13.9]	249 [9.8]	820 [32.3]	670 [26.4]	1838 [72.4]	1760 [69.3]	142 [5.6]	249 [9.8]	742 [29.2]	328 [12.9]	1661 [65.4]	1661 [65.4]
F-150 Regular Cab 4x2 Flareside	119.9	6050	P255/70R-16SL	254 [10.0]	236 [9.3]	343 [13.5]	249 [9.8]	843 [33.2]	691 [27.2]	1864 [73.4]	1778 [70.0]	142 [5.6]	269 [10.6]	777 [30.6]	345 [13.6]	1661 [65.4]	1661 [65.4]
F-150 SuperCab 4x2 Styleside	138.5	6050	P235/70R-16SL	248 [9.7]	236 [9.3]	348 [13.7]	249 [9.8]	820 [32.3]	670 [26.4]	1849 [72.8]	1763 [69.4]	142 [5.6]	249 [9.8]	742 [29.2]	328 [12.9]	1661 [65.4]	1661 [65.4]
	157.1	6050	P235/70R-16SL	256 [10.1]	236 [9.3]	348 [13.7]	249 [9.8]	818 [32.2]	673 [26.5]	1841 [72.5]	1763 [69.4]	142 [5.6]	249 [9.8]	742 [29.2]	328 [12.9]	1661 [65.4]	1661 [65.4]
F-150 SuperCab 4x2 Flareside	138.5	6050	P235/70R-16SL	248 [9.7]	236 [9.3]	348 [13.7]	249 [9.8]	820 [32.3]	670 [26.4]	1849 [72.8]	1763 [69.4]	142 [5.6]	249 [9.8]	742 [29.2]	328 [12.9]	1661 [65.4]	1661 [65.4]
F-150 Regular Cab 4x4 Styleside	120.2	6050	P255/70R-16SL	356 [14.0]	315 [12.4]	424 [16.7]	325 [12.8]	922 [36.3]	770 [30.3]	1935 [76.2]	1859 [73.2]	142 [5.6]	269 [10.6]	780 [30.7]	348 [13.7]	1661 [65.4]	1661 [65.4]
	138.8	6050	P235/70R-16SL	348 [13.7]	310 [12.2]	432 [17.0]	325 [12.8]	886 [34.9]	754 [29.7]	1907 [75.1]	1836 [72.3]	142 [5.6]	249 [9.8]	742 [29.2]	328 [12.9]	1661 [65.4]	1661 [65.4]
F-150 Regular Cab 4x4 Flareside	120.2	6050	P255/70R-16SL	356 [14.0]	312 [12.3]	424 [16.7]	325 [12.8]	922 [36.3]	770 [30.3]	1935 [76.2]	1859 [73.2]	142 [5.6]	269 [10.6]	780 [30.7]	348 [13.7]	1661 [65.4]	1661 [65.4]
F-150 SuperCab 4x4 Styleside	138.8	6250	P235/70R-16SL	348 [13.7]	307 [12.1]	424 [16.7]	325 [12.8]	886 [34.9]	754 [29.7]	1918 [75.5]	1841 [72.5]	142 [5.6]	249 [9.8]	742 [29.2]	328 [12.9]	1661 [65.4]	1661 [65.4]
	157.4	6250	P255/70R-16SL	348 [13.7]	307 [12.1]	424 [16.7]	325 [12.8]	902 [35.5]	775 [30.5]	1925 [75.8]	1857 [73.1]	142 [5.6]	269 [10.6]	780 [30.7]	345 [13.6]	1661 [65.4]	1661 [65.4]
F-150 SuperCab 4x4 Flareside	138.8	6250	P235/70R-16SL	348 [13.7]	307 [12.1]	424 [16.7]	325 [12.8]	886 [34.9]	754 [29.7]	1918 [75.5]	1841 [72.5]	142 [5.6]	249 [9.8]	742 [29.2]	328 [12.9]	1661 [65.4]	1661 [65.4]

(1) The Height Data shown represents dimensions of a base/standard vehicle with no options. Actual height may vary due to production tolerances.
(2) Vehicle ride heights are given at tire minimum loaded radius.

NOTES — [ ] DIMENSIONS ARE INCHES.
— TIRE DATA, PAGE 143.

F-150 SUPERCREW
AXLE/TIRE/VEHICLE HEIGHT DATA

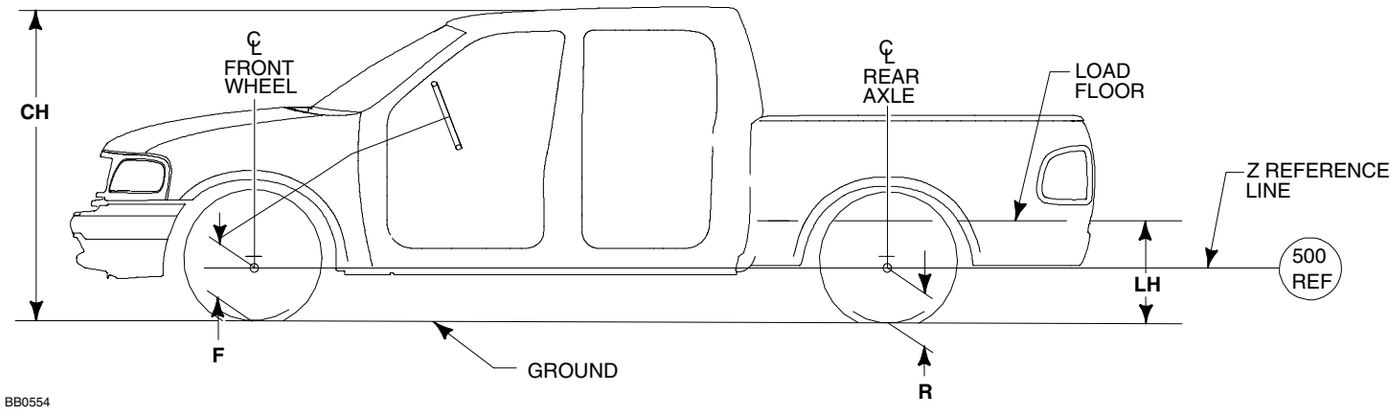

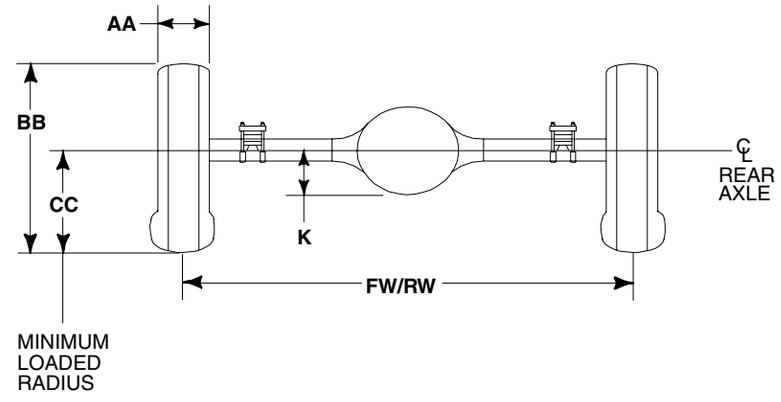

Model	WB inches	GVWR pounds	Base Tire	F Height @ Front Wheel (1)(2) mm [in]		R Height @ Rear Axle (1)(2) mm [in]		LH (1)(2) mm [in]		CH (1)(2) mm [in]		K mm [in]	AA mm [in]	BB mm [in]	CC mm [in]	FW mm [in]	RW mm [in]
				Height at Base Curb Weight	Loaded Height @ Spring Rating	Height at Base Curb Weight	Loaded Height @ Spring Rating	Empty	Loaded	Empty	Loaded						
F-150 SuperCrew 4x2	138.5	6350	P255/70R-16SL	286 [11.3]	252 [9.9]	397 [15.6]	266 [10.5]	813 [32.0]	696 [27.4]	1877 [73.9]	1798 [70.8]	142 [5.6]	249 [9.8]	742 [29.2]	345 [13.6]	1661 [65.4]	1661 [65.4]
F-150 SuperCrew 4x4	138.8	6500	P255/70R-16SL	350 [13.8]	326 [12.8]	452 [17.8]	341 [13.4]	889 [35.0]	775 [30.5]	1953 [76.9]	1874 [73.8]	142 [5.6]	249 [9.8]	738 [29.0]	345 [13.6]	1661 [65.4]	1661 [65.4]

(1) The Height Data shown represents dimensions of a base/standard vehicle with no options. Actual height may vary due to production tolerances.
(2) Vehicle ride heights are given at tire minimum loaded radius.

NOTES — [ ] DIMENSIONS ARE INCHES.
— TIRE DATA, PAGE 143.

F-150 WHEEL AND TIRE DATA

F-150 REGULAR/SUPERCAB/SUPERCREW TIRE DATA

Tire Size	Rim Width	AA Maximum Section Width		BB Maximum Diameter		*CC Minimum Loaded Radius	
		All-Season	All-Terrain	All-Season	All-Terrain	All-Season	All-Terrain
P235/70R16SL	178 [7.0]	249 [9.8]	249 [9.8]	742 [29.2]	742 [29.2]	328 [12.9]	328 [12.9]
P255/70R16SL	178 [7.0]	269 [10.6]	269 [10.6]	777 [30.6]	780 [30.7]	345 [13.6]	348 [13.7]
P265/70R17SL	190 [7.5]	—	284 [11.2]	—	825 [32.5]	—	371 [14.6]
P275/60R17SL	190 [7.5]	263 [10.4]	—	785 [30.9]	—	350 [13.8]	—
LT245/75R16/D	178 [7.0]	264 [10.4]	264 [10.4]	787 [31.0]	792 [31.2]	356 [14.0]	358 [14.1]
LT265/70R1X17	190 [7.5]	—	264 [10.8]	—	815 [32.1]	—	348 [13.7]

* This number represents Radius – Axle centerline to ground with maximum rated load on tire at maximum pressure.

F-150 REGULAR/SUPERCAB/SUPERCREW WHEEL DATA

Wheel Type	Wheel Size	Inset	No. of Studs	Bolt Circle	Max. Wheel Capacity [lb @ Ground]
Styled Steel	16 x 7.0J	0.55	5	5.3	1950 Front/2064 Rear
Polished Aluminum	16 x 7.0J	0.55	5	5.3	1900
Cast Aluminum	16 x 7.0J	0.55	5	5.3	1900
Cast Aluminum	17 x 7.5J	0.55	5	5.3	1900 Front/2064 Rear
Cast Aluminum Spoke	17 x 7.5J	0.55	5	5.3	1900 Front/2064 Rear
Chromed Steel	17 x 7.5J	0.55	5	5.3	1950 Front/2064 Rear
Argent Styled Steel	16 x 7.0J	0.55	7	5.9	2100 Front/2400 Rear
Chrome Styled Steel	16 x 7.0J	0.55	7	5.9	2100 Front/2400 Rear

NOTE — [ ] DIMENSIONS ARE INCHES.

DIMENSIONAL DATA
SUPER DUTY F-250/350 REGULAR CAB
STYLESIDE PICKUP – 4X2/4X4

2003
MODEL YEAR

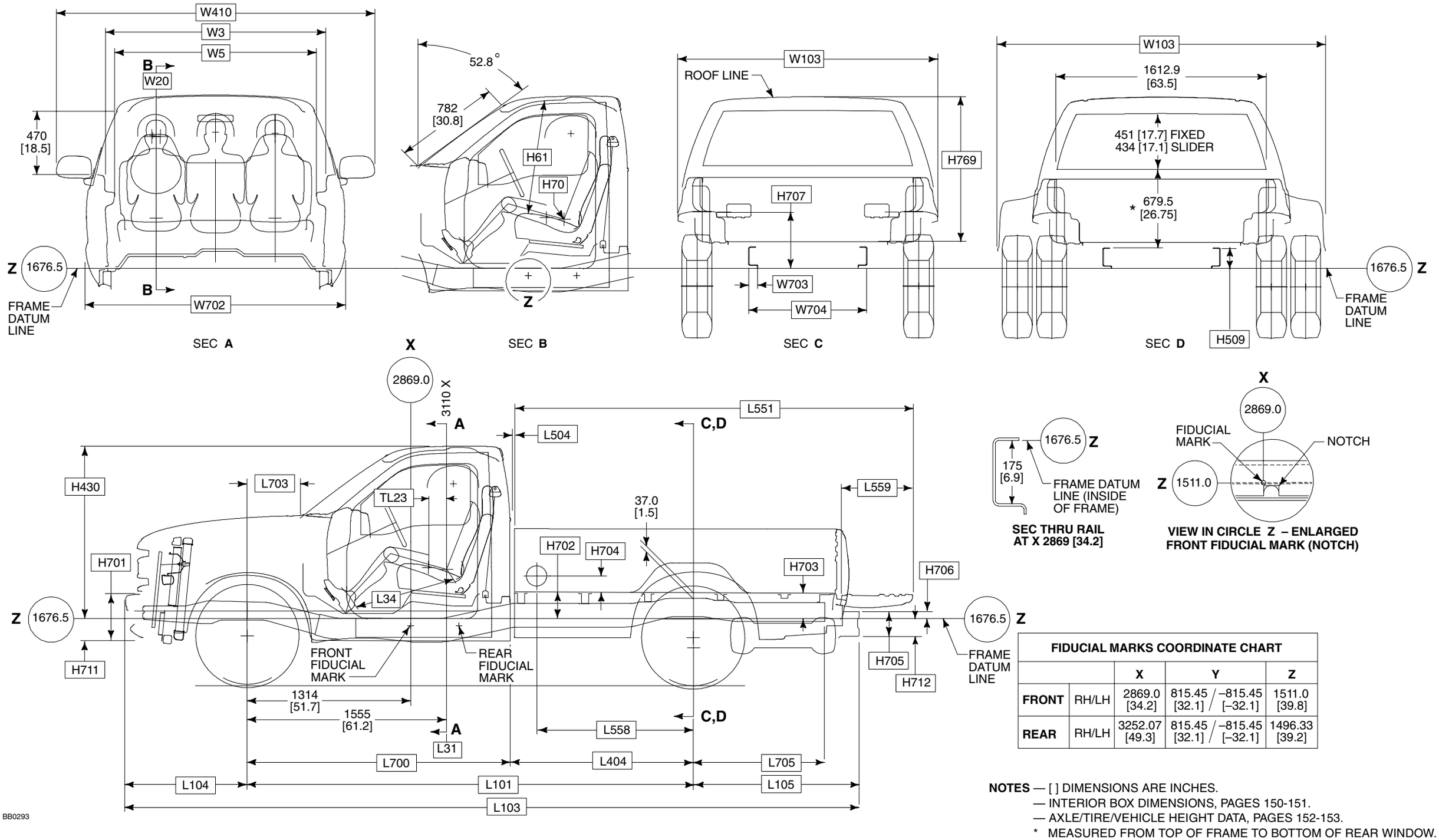

FIDUCIAL MARKS COORDINATE CHART				
		X	Y	Z
FRONT	RH/LH	2869.0 [34.2]	815.45 [32.1] / –815.45 [–32.1]	1511.0 [39.8]
REAR	RH/LH	3252.07 [49.3]	815.45 [32.1] / –815.45 [–32.1]	1496.33 [39.2]

NOTES — [ ] DIMENSIONS ARE INCHES.
— INTERIOR BOX DIMENSIONS, PAGES 150-151.
— AXLE/TIRE/VEHICLE HEIGHT DATA, PAGES 152-153.
* MEASURED FROM TOP OF FRAME TO BOTTOM OF REAR WINDOW.

DIMENSIONAL DATA
SUPER DUTY F-250/350 REGULAR CAB
STYLESIDE PICKUP – 4X2/4X4

2003
MODEL YEAR

CHASSIS

CODE	DESCRIPTION	4X2/4X4
H509	FRAME DATUM LINE TO TOP OF FRAME AT REAR AXLE	162 [6.4]
L101	WHEELBASE	3480 [137.0]
L103	OVERALL LENGTH –WITH REAR BUMPER	5643 [222.2]
L104	FRONT OVERHANG	950 [37.4]
L105	REAR OVERHANG –WITH REAR BUMPER	1214 [47.8]
L404	BACK OF CAB TO ℄ OF REAR AXLE	1427 [56.2]
L705	℄ REAR AXLE TO END OF FRAME	1026 [40.4]
W703	FRAME RAIL WIDTH	72 [2.8]
W704	REAR FRAME WIDTH	956 [37.7]

PICKUP BODY

CODE	DESCRIPTION	4X2/4X4
	NOMINAL CARGO BODY SIZE	
H702	FRAME DATUM LINE TO TOP OF CARGO BOX FLOOR –FRONT	211 [8.3]
H703	FRAME DATUM LINE TO CARGO BODY FLOOR — REAR	199 [7.8]
H704	TOP OF FLOOR TO ℄ OF FUEL FILLER DOOR	126 [5.0]
H705	REAR BUMPER HEIGHT	219 [8.6]
H706	FRAME DATUM TO TOP OF BUMPER STEP	124 [4.9]
H707	FRAME DATUM TO TOP OF WHEELHOUSE	435 [17.1]
H712	FRAME DATUM LINE TO BOTTOM OF REAR BUMPER	163 [6.4]
H769	TOP OF FLOOR TO TOP OF CAB @ ℄ REAR WHEELS	1146 [45.1]
L504	BACK OF CAB TO PICKUP BODY	29 [1.1]
L551	OVERALL LENGTH TO OPEN TAILGATE	3109 [122.4]
L558	℄ REAR AXLE TO ℄ FUEL FILLER DOOR	1223 [48.2]
L559	OPEN TAILGATE	549 [21.6]
W103	VEHICLE WIDTH SRW DRW	2031 [80.0] 2426 [95.5]

CAB

CODE	DESCRIPTION	4X2/4X4
H61	EFFECTIVE HEAD ROOM	1045 [41.1]
H70	SEATING REFERENCE POINT –LH/RH (Z)	2064 [81.2]
H430	FRAME DATUM TO TOP OF CAB	1350 [53.1]
H701	FRONT BUMPER HEIGHT –W/O VALANCE –W/VALANCE	337[13.3] 361[14.2]
H711	FRAME DATUM TO BOTTOM OF FRONT BUMPER –W/O VALANCE –W/VALANCE	 145 [5.7] 170 [6.7]
TL23	SEAT TRACK TRAVEL	160 [6.3]
L31	SEAT REFERENCE POINT –SgRP –LH/RH (X)	3110 [43.7]
L34	MAXIMUM EFFECTIVE LEG ROOM –W/VINYL MAT –W/CARPET	1034 [40.7] 1036 [40.8]
L700	℄ FRONT AXLE TO BACK OF CAB	2052 [80.8]
L703	℄ FRONT AXLE TO COWL POINT	447 [17.6]
W3	SHOULDER ROOM –BASE TRIM –HIGH SERIES TRIM	1701 [67.0] 1728 [68.0]
W5	HIP ROOM	1711 [67.4]
W20	SEATING REFERENCE POINT –SgRP –LH/RH (Y)	– 464/464 [–18.3/18.3]
W410	OVERALL CAB WIDTH WITH MIRRORS –MANUAL –ELECTRIC –TRAILER TOW	 2522 [99.3] 2522 [99.3] 2677 [105.4]
W702	FRONT BUMPER WIDTH	2006 [79.0]

NOTE –[ ] DIMENSIONS ARE INCHES.

DIMENSIONAL DATA
SUPER DUTY F-250/350 SUPERCAB
STYLESIDE PICKUP – 4X2/4X4

2003
MODEL YEAR

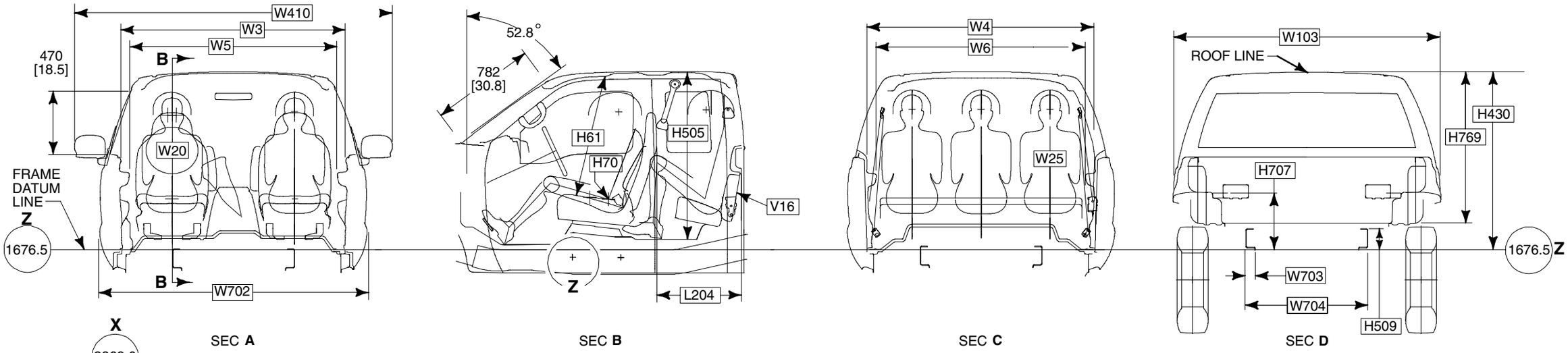

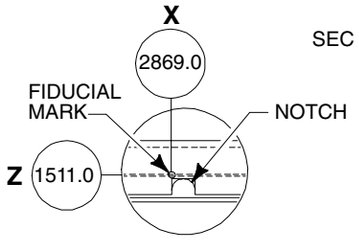

VIEW IN CIRCLE Z – ENLARGED FRONT FIDUCIAL MARK (NOTCH)

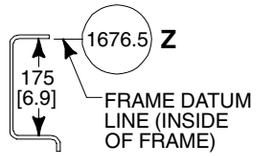

SECTION THRU RAIL AT X 2869 [34.2]

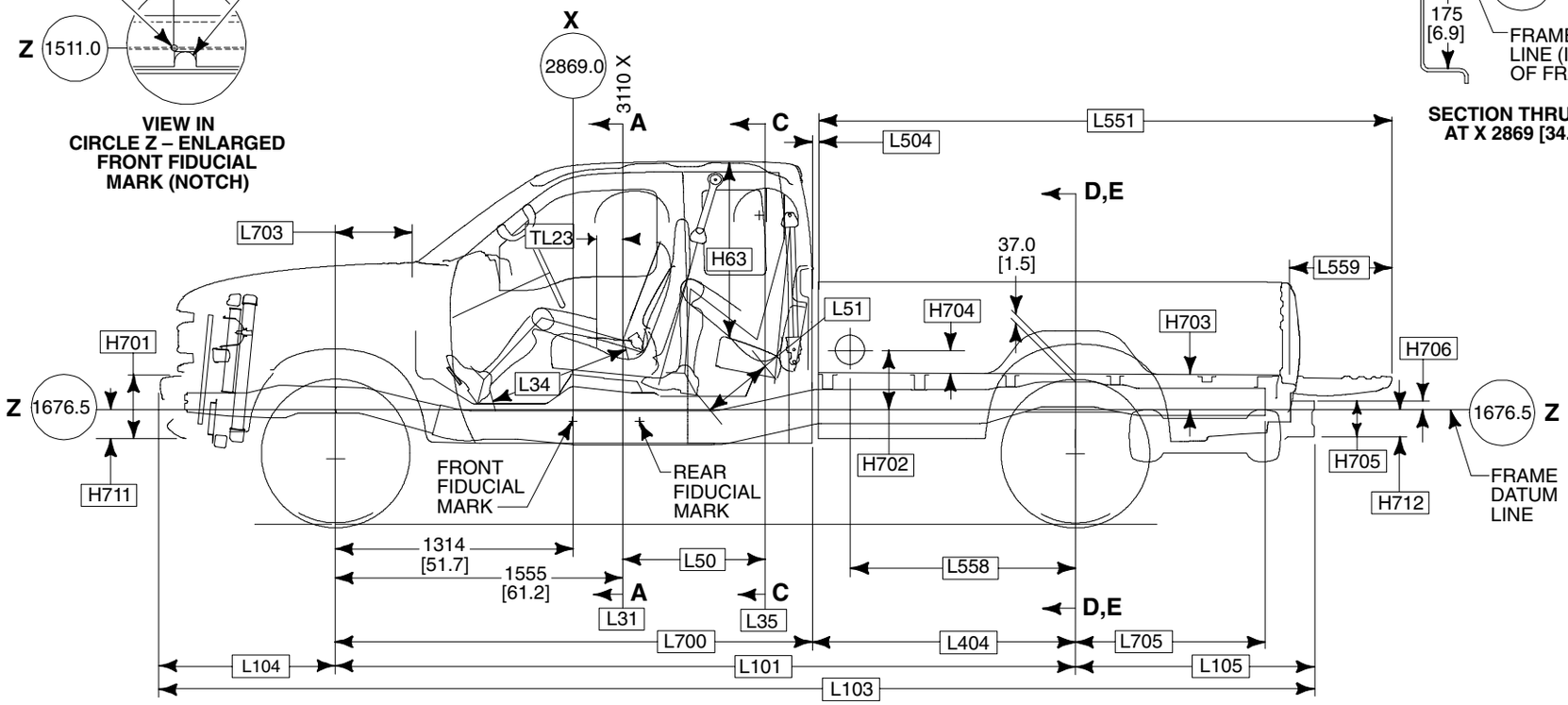

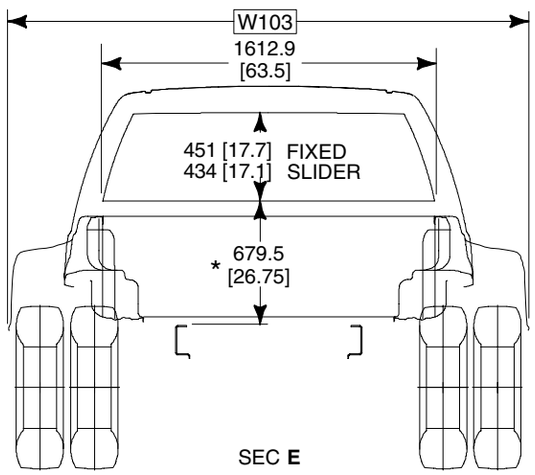

FIDUCIAL MARKS COORDINATE CHART				
		X	Y	Z
FRONT	RH/LH	2869.0 [34.2]	815.45 [32.1] / –815.45 [–32.1]	1511.0 [39.8]
REAR	RH/LH	3252.07 [49.3]	815.45 [32.1] / –815.45 [–32.1]	1496.33 [39.2]

NOTES — [ ] DIMENSIONS ARE INCHES.
— INTERIOR BOX DIMENSIONS, PAGES 150-151.
— AXLE/TIRE/VEHICLE HEIGHT DATA, PAGES 152-153.
* MEASURED FROM TOP OF FRAME TO BOTTOM OF REAR WINDOW.

BB0291

DIMENSIONAL DATA
SUPER DUTY F-250/350 SUPERCAB
STYLESIDE PICKUP – 4X2/4X4

2003
MODEL YEAR

CHASSIS

CODE	DESCRIPTION	SWB	LWB
H509	FRAME DATUM LINE TO TOP OF FRAME AT REAR AXLE	162 [6.4]	162 [6.4]
L101	WHEELBASE	3602 [141.8]	4013 [158.0]
L103	OVERALL LENGTH –WITH REAR BUMPER	5876 [231.3]	6177 [243.2]
L104	FRONT OVERHANG	950 [37.4]	950 [37.4]
L105	REAR OVERHANG –WITH REAR BUMPER	1326 [52.2]	1214 [47.8]
L404	BACK OF CAB TO ℄ OF REAR AXLE	1016 [40.0]	1427 [56.2]
L705	℄ REAR AXLE TO END OF FRAME	1026 [40.4]	1026 [40.4]
W703	FRAME RAIL WIDTH	72 [2.8]	72 [2.8]
W704	REAR FRAME WIDTH	956 [37.7]	956 [37.7]

PICKUP BODY

CODE	DESCRIPTION	SWB	LWB
	NOMINAL CARGO BODY SIZE		
H702	FRAME DATUM LINE TO TOP OF CARGO BOX FLOOR –FRONT	211 [8.3]	211 [8.3]
H703	FRAME DATUM LINE TO CARGO BODY FLOOR –REAR	199 [7.8]	199 [7.8]
H704	TOP OF FLOOR TO ℄ OF FUEL FILLER DOOR	126 [5.0]	126 [5.0]
H705	REAR BUMPER HEIGHT	219 [8.6]	219 [8.6]
H706	FRAME DATUM TO TOP OF BUMPER STEP	124 [4.9]	124 [4.9]
H707	FRAME DATUM TO TOP OF WHEELHOUSE	435 [17.1]	435 [17.1]
H712	FRAME DATUM LINE TO BOTTOM OF REAR BUMPER	163 [6.4]	163 [6.4]
H769	TOP OF FLOOR TO TOP OF CAB @ ℄ REAR WHEELS	1151 [45.3]	1151 [45.3]
L504	BACK OF CAB TO PICKUP BODY	21 [0.8]	29 [1.1]
L551	OVERALL LENGTH TO OPEN TAILGATE	2698 [106.2]	3109 [122.4]
L558	℄ REAR AXLE TO ℄ FUEL FILLER DOOR	597 [23.5]	1223 [48.2]
L559	OPEN TAILGATE	549 [21.6]	549 [21.6]
W103	VEHICLE WIDTH SRW DRW	2031 [80.0] 2378 [93.6]	2031 [80.0] 2378 [93.6]

CAB

CODE	DESCRIPTION	4X2/4X4
H61	EFFECTIVE HEAD ROOM –FRONT	1052 [41.4]
H63	EFFECTIVE HEAD ROOM –REAR BENCH SEAT	971 [38.2]
H70	SEATING REFERENCE POINT –SgRP –LH/RH — FRONT (Z)	2064 [81.2]
H71	SEATING REFERENCE POINT –SgRP –LH/RH — REAR BENCH SEAT (Z)	2067 [61.7]
H430	FRAME DATUM TO TOP OF CAB	1357 [53.4]
H505	MAXIMUM CARGO HEIGHT	1266 [49.8]
H701	FRONT BUMPER HEIGHT –W/O VALANCE –W/VALANCE	337[13.3] 361[14.2]
H711	FRAME DATUM TO BOTTOM OF FRONT BUMPER –W/O VALANCE –W/VALANCE	 145 [5.7] 170 [6.7]
TL23	SEAT TRACK TRAVEL	160 [6.3]
L31	SEAT REFERENCE POINT –SgRP –LH/RH — FRONT (X)	3110 [43.7]
L34	MAXIMUM EFFECTIVE LEG ROOM –FRONT –W/VINYL MAT –W/CARPET	 1034 [40.7] 1036 [40.8]
L35	SEAT REFERENCE POINT –SgRP –LH/RH — REAR BENCH SEAT (X)	3840 [72.4]
L50	H-POINT COUPLE DISTANCE	729 [28.7]
L51	EFFECTIVE LEG ROOM –REAR –FRONT BENCH/REAR BENCH –FRONT CAPTAIN'S CHAIR, REAR BENCH	 822 [32.4] 802 [31.6]
L700	℄ FRONT AXLE TO BACK OF CAB	2586 [101.8]
L703	℄ FRONT AXLE TO COWL POINT	447 [17.6]
V16	REGULAR CARGO VOLUME WITH REAR SEAT CUSHION FOLDED UP –LITERS/CU.FT. REGULAR CARGO VOLUME WITHOUT REAR SEAT –LITERS/CU.FT.	1230/43.4 1501/53.0
W3	SHOULDER ROOM –FRONT –BASE TRIM –HIGH SERIES TRIM	 1728 [68.0] 1701 [67.0]
W4	SHOULDER ROOM –REAR BENCH SEAT –BASE TRIM –HIGH SERIES TRIM	 1728 [68.0] 1728 [68.0]
W5	HIP ROOM –FRONT –BASE TRIM –HIGH SERIES TRIM	1711 [67.4] 1711 [67.4]
W6	HIP ROOM –REAR –BASE TRIM BENCH SEAT	1710 [67.3]
W20	SEATING REFERENCE POINT –SgRP –LH/RH — FRONT (Y)	–464/464 [–18.3/18.3]
W25	SEATING REFERENCE POINT –SgRP –LH/RH — REAR BENCH SEAT (Y)	523 [20.6]
W410	OVERALL CAB WIDTH WITH MIRRORS –MANUAL –ELECTRIC –TRAILER TOW	 2522 [99.3] 2522 [99.3] 2677 [105.4]
W702	FRONT BUMPER WIDTH	2006 [79.0]

NOTE –[ ] DIMENSIONS ARE INCHES.

DIMENSIONAL DATA
SUPER DUTY F-250/350 CREW CAB
STYLESIDE PICKUP – 4X2/4X4

2003
MODEL YEAR

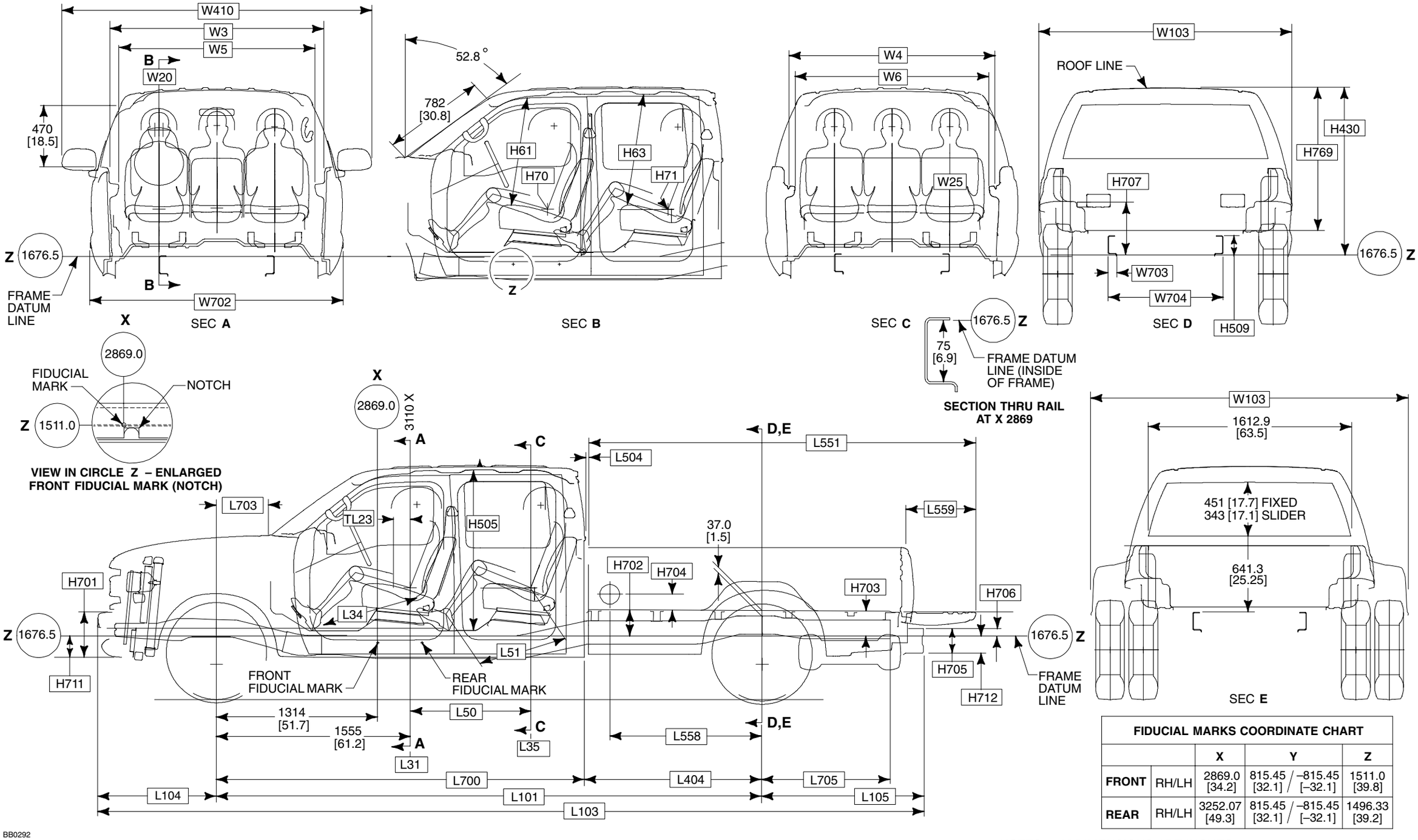

FIDUCIAL MARKS COORDINATE CHART				
		X	Y	Z
FRONT	RH/LH	2869.0 [34.2]	815.45 [32.1] / –815.45 [–32.1]	1511.0 [39.8]
REAR	RH/LH	3252.07 [49.3]	815.45 [32.1] / –815.45 [–32.1]	1496.33 [39.2]

NOTES — [ ] DIMENSIONS ARE INCHES.
— INTERIOR BOX DIMENSIONS, PAGES 150-151.
— AXLE/TIRE/VEHICLE HEIGHT DATA, PAGES 156-157.
* MEASURED FROM TOP OF FRAME TO BOTTOM OF REAR WINDOW.

DIMENSIONAL DATA
SUPER DUTY F-250/350 CREW CAB
STYLESIDE PICKUP – 4X2/4X4

2003
MODEL YEAR

CHASSIS

CODE	DESCRIPTION	SWB	LWB
H509	FRAME DATUM LINE TO TOP OF FRAME AT REAR AXLE	162 [6.4]	162 [6.4]
L101	WHEELBASE	3966 [156.1]	4379 [172.4]
L103	OVERALL LENGTH — WITH REAR BUMPER	6133 [241.4]	6542 [257.6]
L104	FRONT OVERHANG	953 [37.5]	950 [37.4]
L105	REAR OVERHANG — WITH REAR BUMPER	1214 [47.8]	1214 [47.8]
L404	BACK OF CAB TO ℄ OF REAR AXLE	1016 [40.0]	1427 [56.2]
L705	℄ REAR AXLE TO END OF FRAME	1026 [40.4]	1026 [40.4]
W703	FRAME RAIL WIDTH	72 [2.8]	72 [2.8]
W704	REAR FRAME WIDTH	956 [37.7]	956 [37.7]

PICKUP BODY

CODE	DESCRIPTION	SWB	LWB
	NOMINAL CARGO BODY SIZE		
H702	FRAME DATUM LINE TO TOP OF CARGO BOX FLOOR — FRONT	211 [8.3]	211 [8.3]
H703	FRAME DATUM LINE TO CARGO BODY FLOOR — REAR	199 [7.8]	199 [7.8]
H704	TOP OF FLOOR TO ℄ OF FUEL FILLER DOOR	126 [5.0]	126 [5.0]
H705	REAR BUMPER HEIGHT	219 [8.6]	219 [8.6]
H706	FRAME DATUM TO TOP OF BUMPER STEP	124 [4.9]	124 [4.9]
H707	FRAME DATUM TO TOP OF WHEELHOUSE	435 [17.1]	435 [17.1]
H712	FRAME DATUM LINE TO BOTTOM OF REAR BUMPER	163 [6.4]	163 [6.4]
H769	TOP OF FLOOR TO TOP OF CAB @ ℄ REAR WHEELS	1164 [45.8]	1164 [45.8]
L504	CAB TO PICKUP BODY	28 [1.1]	28 [1.1]
L551	OVERALL LENGTH TO OPEN TAILGATE	2698 [106.2]	3109 [122.4]
L558	℄ REAR AXLE TO ℄ FUEL FILLER DOOR — SRW	597 [23.5]	1223 [48.2]
	— DRW	667 [26.3]	1223 [48.2]
L559	OPEN TAILGATE	549 [21.6]	549 [21.6]
W103	VEHICLE WIDTH SRW	2031 [80.0]	2031 [80.0]
	DRW	2426 [95.5]	2426 [95.5]

CAB

CODE	DESCRIPTION	4X2/4X4
H61	EFFECTIVE HEAD ROOM — FRONT	1049 [41.3]
H63	EFFECTIVE HEAD ROOM — REAR BENCH SEAT	1036 [40.8]
H70	SEATING REFERENCE POINT — SgRP — LH/RH — FRONT (Z)	2064 [81.2]
H71	SEATING REFERENCE POINT — SgRP — LH/RH — REAR BENCH SEAT (Z)	2064 [81.2]
H430	FRAME DATUM TO TOP OF CAB	1368 [53.9]
H505	MAXIMUM CARGO HEIGHT	1284 [50.6]
H701	FRONT BUMPER HEIGHT — W/O VALANCE	337[13.3]
	— W/VALANCE	361[14.2]
H711	FRAME DATUM TO BOTTOM OF FRONT BUMPER	
	— W/O VALANCE	145 [5.7]
	— W/VALANCE	170 [6.7]
TL23	SEAT TRACK TRAVEL	140 [5.5]
L31	SEAT REFERENCE POINT — SgRP — LH/RH — FRONT (X)	3110 [43.7]
L34	MAXIMUM EFFECTIVE LEG ROOM — FRONT	
	— W/VINYL MAT	1034 [40.7]
	— W/CARPET	1036 [40.8]
L35	SEAT REFERENCE POINT — SgRP — LH/RH — REAR BENCH SEAT (X)	4078 [81.8]
L50	H-POINT COUPLE DISTANCE	968 [38.1]
L51	EFFECTIVE LEG ROOM — REAR	
	— FRONT BENCH/REAR BENCH	1050 [41.3]
	— FRONT CAPTAIN'S CHAIR, REAR BENCH	1038 [40.9]
L700	℄ FRONT AXLE TO BACK OF CAB	2951 [116.2]
L703	℄ FRONT AXLE TO COWL POINT	447 [17.6]
W3	SHOULDER ROOM — FRONT	
	— BASE TRIM	1728 [68.0]
	— HIGH SERIES TRIM	1701 [67.0]
W4	SHOULDER ROOM — REAR BENCH SEAT	
	— BASE TRIM	1726 [68.0]
	— HIGH SERIES TRIM	1700 [66.9]
W5	HIP ROOM — FRONT — BASE TRIM	1711 [67.4]
	— HIGH SERIES TRIM	1711 [67.4]
W6	HIP ROOM — REAR — BASE TRIM BENCH SEAT	1708 [67.3]
W20	SEATING REFERENCE POINT — SgRP — LH/RH — FRONT (Y)	–464/464 [–18.3/18.3]
W25	SEATING REFERENCE POINT — SgRP — LH/RH — REAR BENCH SEAT (Y)	–464/464 [–18.3/18.3]
W410	OVERALL CAB WIDTH WITH MIRRORS	
	— MANUAL	2522 [99.3]
	— ELECTRIC	2522 [99.3]
	— TRAILER TOW	2677 [105.4]
W702	FRONT BUMPER WIDTH	2006 [79.0]

NOTE — [ ] DIMENSIONS ARE INCHES.

DIMENSIONS AND FEATURES
SUPER DUTY F-250/350
STYLESIDE PICKUP BOX

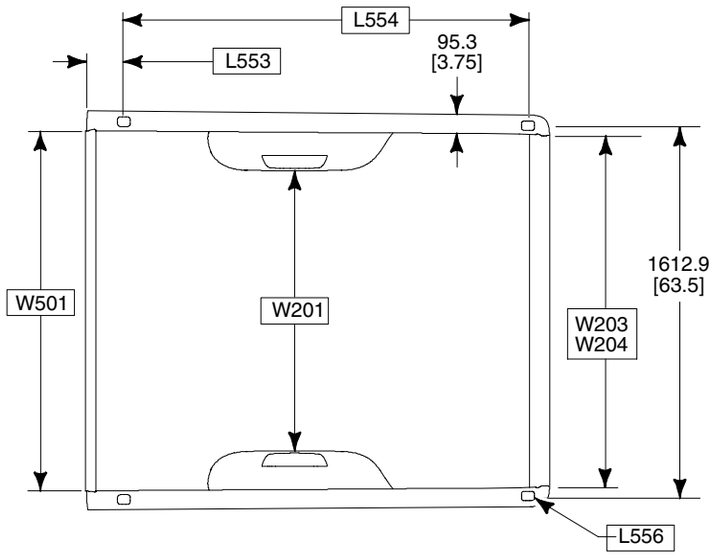

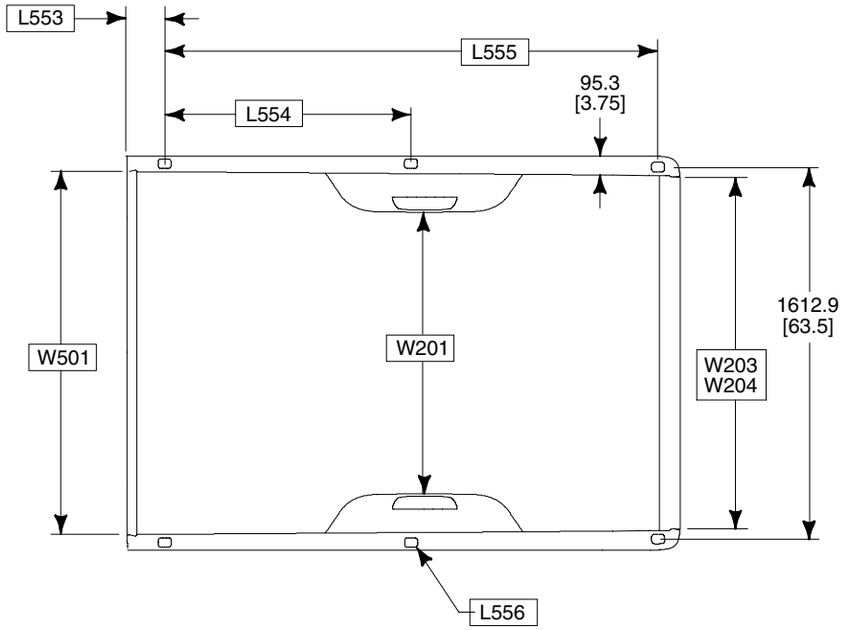

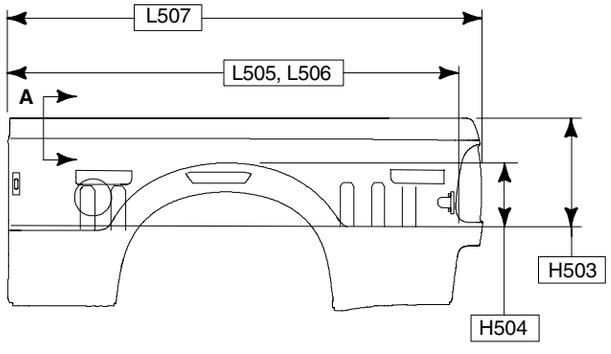

6–3/4 FT. BOX

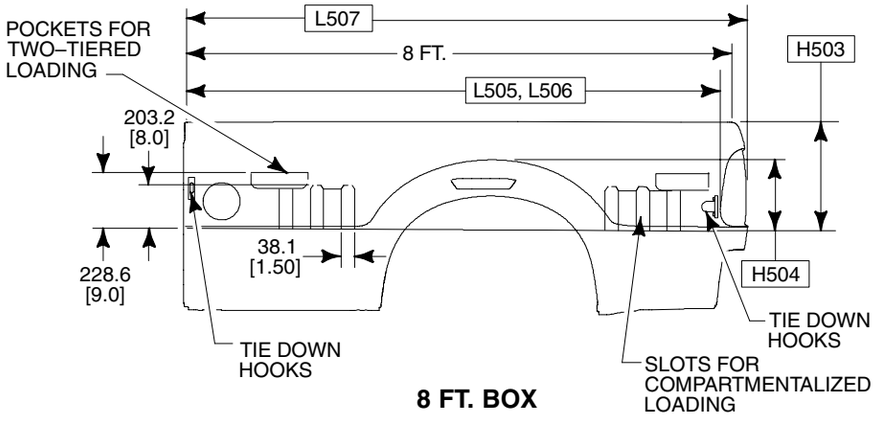

8 FT. BOX

BB0439

NOTE — [ ] DIMENSIONS ARE INCHES.

DIMENSIONS AND FEATURES
SUPER DUTY F-250/350
STYLESIDE PICKUP BOX

CODE	DESCRIPTION	LWB	SWB
	NOMINAL CARGO BODY SIZE	8 FT	6¾ FT
H503†	CARGO BODY HEIGHT	507 [20.0]	507 [20.0]
H504	WHEELHOUSE HEIGHT	233 [9.2]	233 [9.2]
L505	CARGO BODY LENGTH @ FLOOR	2504 [98.6]	2092 [82.4]
L506	CARGO BODY LENGTH @ TOP	2464 [97.0]	2052 [80.8]
L507	CARGO BODY OVERALL LENGTH	2609 [102.7]	2197 [86.5]
L553	FRONT OF BOX TO ℄ STAKE #1	137 [5.4]	137 [5.4]
L554	℄ OF STAKE #1 TO STAKE #2	1135 [44.7]	1859 [73.2]

† MEASURED FROM TOP OF FLOOR BEADS

CODE	DESCRIPTION	LWB	SWB
	NOMINAL CARGO BODY SIZE	8 FT	6¾ FT
L555	℄ OF STAKE #1 TO STAKE #3	2270 [89.4]	—
L556	STAKE POCKET SIZE	59 x 44 [2.3] x [1.7]	59 x 44 [2.3] x [1.7]
W201	CARGO WIDTH BETWEEN WHEELHOUSE	1292 [50.9]	1292 [50.9]
W203	REAR OPENING WIDTH AT FLOOR	1540 [60.6]	1540 [60.6]
W204	REAR OPENING WIDTH AT TOP OF BOX OR BELT	1616 [63.6]	1616 [63.6]
W501	INSIDE WIDTH @ TOP OF BOX AT ℄ OF REAR AXLE (CARGO BODY WIDTH @ BELT)	1623 [63.9]	1623 [63.9]
V5#	CARGO VOLUME Liters^3 (Feet^3)	2199 [77.7]	1832 [64.7]

DOES NOT ALLOW FOR WHEELHOUSES

NOTE — [ ] DIMENSIONS ARE INCHES.

AXLE/TIRE/VEHICLE HEIGHT DATA
SUPER DUTY F-250/350 REGULAR CAB
STYLESIDE PICKUP – 4X2/4X4

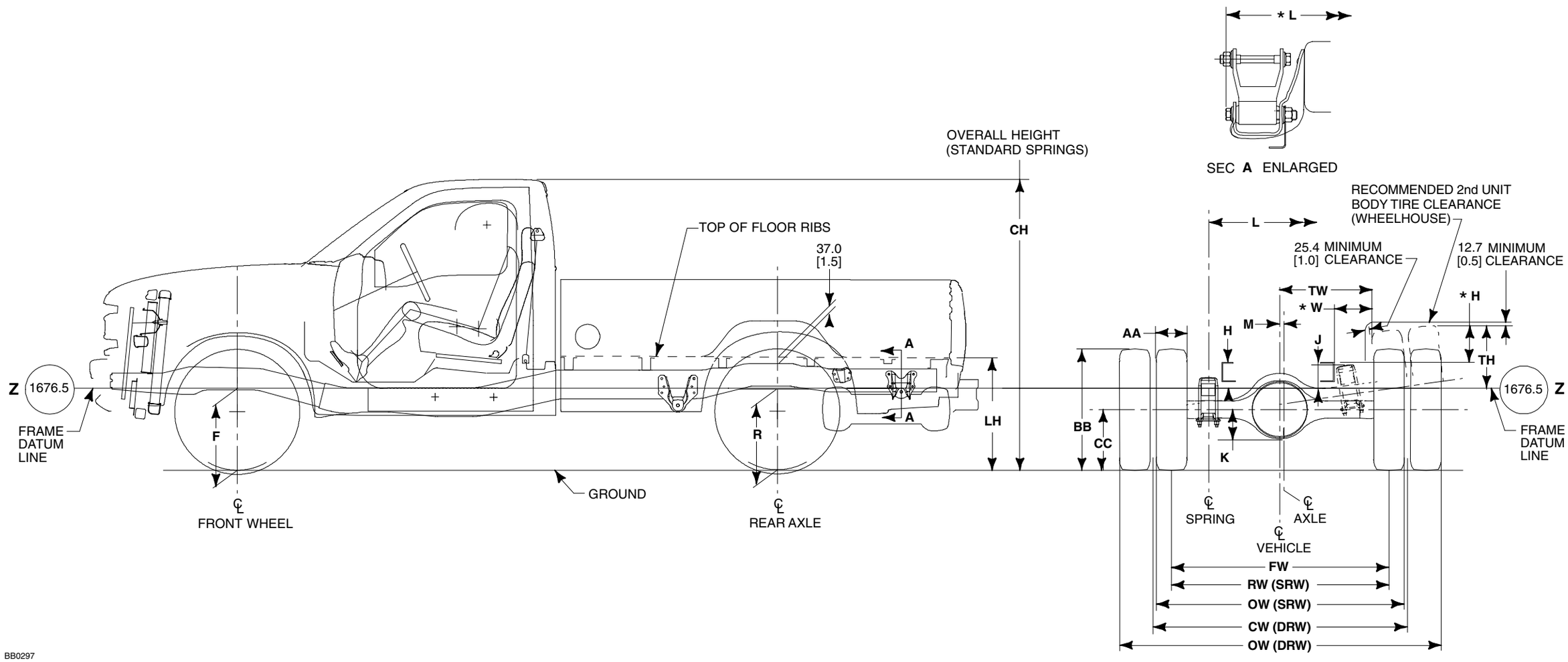

NOTES — [ ] DIMENSIONS ARE INCHES.

— **F** AND **R** VEHICLE HEIGHT DIMENSIONS ARE FROM GROUND TO FRAME DATUM LINE; **LH** IS FROM GROUND TO TOP OF FLOOR RIBS.

— ***H** IS TOP OF FRAME AT ℄ OF REAR AXLE TO TOP OF TIRE IN JOUNCE

— ***L** IS FROM OUTSIDE EDGE OF SHACKLE EYEBOLT

— ***W** IS FROM FRAME TO TOP OF TIRE IN JOUNCE

AXLE/TIRE/VEHICLE HEIGHT DATA
SUPER DUTY F-250/350 REGULAR CAB
STYLESIDE PICKUP – 4X2/4X4

2003
MODEL YEAR

MODEL	WB	GVWR	BASE TIRE	F HEIGHT AT FRONT WHEEL (5)		R HEIGHT AT REAR AXLE (5)		LH(5)(6)		CH(5)		H	J	K	L	* L	M	AA(7)	BB(8)	CC(8)	FW	RW	OW	CW	TH	* H	TW	* W
				CURB(3)	LOADED(4)	CURB(3)	LOADED(4)	EMPTY	LOADED	EMPTY	LOADED																	
Super Duty F-250 Regular Cab 4x2	3480 [137.0]	8800	LT235/85R16E	527 [20.7]	515 [20.3]	633 [24.9]	505 [19.9]	863 [34.0]	697 [27.4]	1935 [76.2]	1864 [73.4]	162.7 [6.4]	156.6 [6.2]	165 [6.5]	1143 [45.0]	1271 [50.0]	45 [1.8]	259 [10.2]	792 [31.2]	375 [14.8]	1736 [68.3]	1729 [68.1]	1983 [78.1]	—	390 [15.4]	233 [9.2]	716 [28.2]	254 [10.0]
Super Duty F-250 Regular Cab 4x4	3480 [137.0]	8800	LT235/85R16E	626 [24.7]	604 [23.8]	684 [26.9]	558 [22.0]	895 [35.2]	738 [29.0]	2005 [78.9]	1931 [76.0]	162.7 [6.4]	160.7 [6.3]	165 [6.5]	1143 [45.0]	1271 [50.0]	45 [1.8]	259 [10.2]	792 [31.2]	375 [14.8]	1736 [68.3]	1729 [68.1]	1983 [78.1]	—	298 [11.7]	141 [5.6]	727 [28.6]	262 [10.3]
Super Duty F-350 Regular Cab 4x2	3480 [137.0]	9900(1)	LT265/75R16E	526 [20.7]	515 [20.3]	633 [24.9]	505 [19.9]	863 [34.0]	697 [27.4]	1938 [76.3]	1860 [73.2]	162.7 [6.4]	156.6 [6.2]	165 [6.5]	1143 [45.0]	1271 [50.0]	45 [1.8]	278 [10.9]	781 [30.7]	371 [14.6]	1736 [68.3]	1729 [68.1]	2007 [79.0]	—	376 [14.8]	219 [8.6]	707 [27.8]	245 [9.6]
		11,200(2) DRW	LT215/85R16E	520 [20.5]	504 [19.9]	635 [25.0]	494 [19.5]	867 [34.2]	686 [27.0]	1961 [77.2]	1860 [73.2]	162.7 [6.4]	159.4 [6.3]	177 [7.0]	1143 [45.0]	1271 [50.0]	45 [1.8]	229 [9.0]	748 [29.4]	355 [14.0]	1736 [68.3]	—	2380 [93.7]	1880 [74.0]	379 [14.9]	222 [8.7]	664 [26.1]	202 [8.0]
Super Duty F-350 Regular Cab 4x4	3480 [137.0]	9900(1)	LT265/75R16E	626 [24.7]	604 [23.8]	731 [28.8]	604 [23.8]	960 [37.8]	797 [31.4]	2041 [80.3]	1958 [77.1]	162.7 [6.4]	148.8 [5.9]	165 [6.5]	1143 [45.0]	1271 [50.0]	45 [1.8]	278 [10.9]	781 [30.7]	371 [14.6]	1736 [68.3]	1729 [68.1]	2007 [79.0]	—	285 [11.2]	128 [5.0]	715 [28.1]	253 [10.0]
		11,200(2) DRW	LT235/85R16E	628 [24.7]	607 [23.9]	699 [27.5]	561 [22.1]	913 [35.9]	740 [29.1]	2018 [79.4]	1956 [77.0]	162.7 [6.4]	177.3 [7.0]	177 [7.0]	1143 [45.0]	1271 [50.0]	45 [1.8]	259 [10.2]	792 [31.2]	375 [14.8]	1736 [68.3]	—	2405 [94.7]	1880 [74.0]	317 [12.5]	160 [6.3]	664 [26.1]	202 [8.0]

DRW — Dual Rear Wheels
(1) — 9700 lb California
(2) — 11,000 lb California
(3) — Height at base curb weight with standard springs
(4) — Loaded height at spring rating with standard springs

(5) — The Height Data shown represents dimensions of a base/standard vehicle with no options. Actural height may vary due to production tolerances [completed vehicles only].
(6) — Distance from Pickup Box Floor to Frame Datum Line is 211 [8.3] at front, 199 [7.8] at rear.
(7) — AA is measured at 80 psi for all season tire.
(8) — BB/CC are measured at design at 60 psi.
— Static load rating of design and curb weight are taken at 60 psi.

@ — The top of the spring seat is below datum line.
*H — Top of frame at ℄ of rear axle to top of tire in jounce
*L — From outside edge of shackle eyebolt
*W — From frame to top of tire in jounce

NOTES –[ ] DIMENSIONS ARE INCHES.
— **F** AND **R** VEHICLE HEIGHT DIMENSIONS ARE FROM GROUND TO FRAME DATUM LINE.
— **LH** IS FROM GROUND TO TOP OF FLOOR RIBS.

AXLE/TIRE/VEHICLE HEIGHT DATA
SUPER DUTY F-250/350 SUPERCAB
STYLESIDE PICKUP – 4X2/4X4

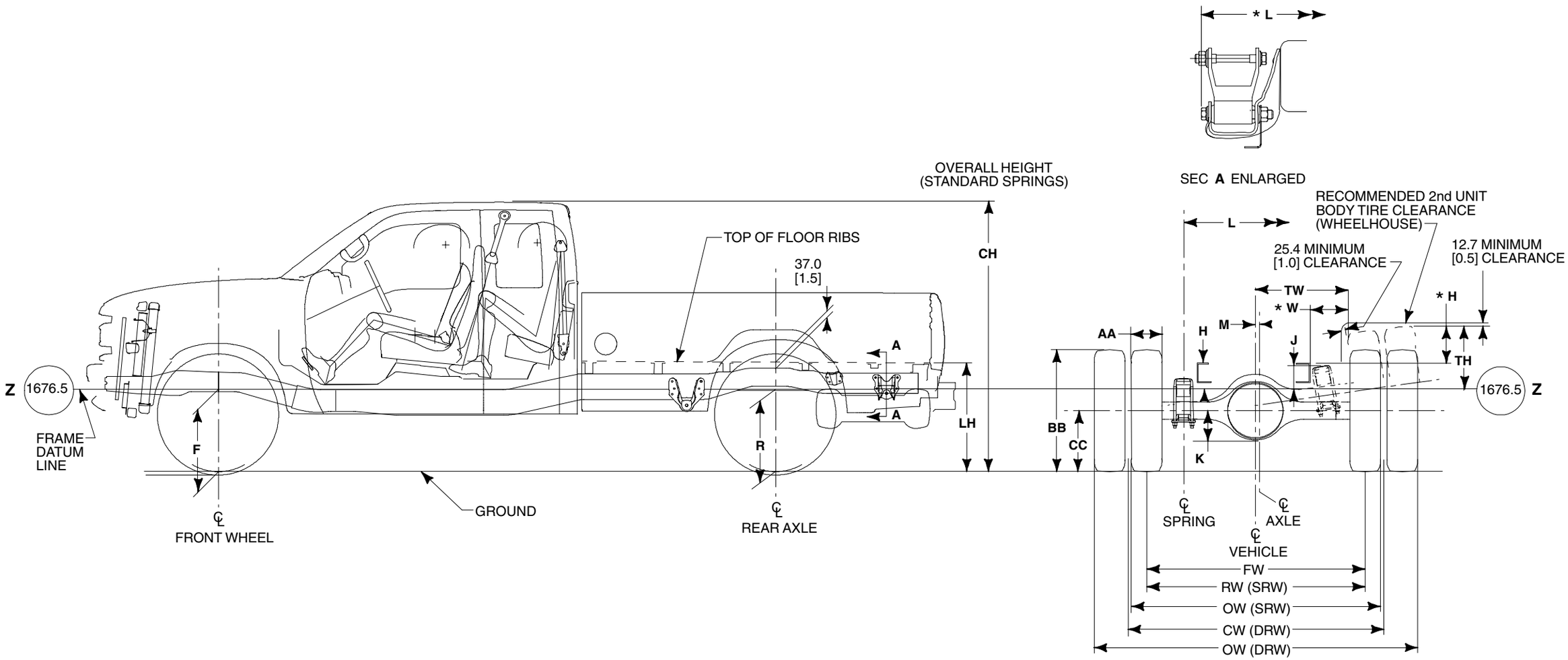

BB0299

NOTES — [ ] DIMENSIONS ARE INCHES.

— **F** AND **R** VEHICLE HEIGHT DIMENSIONS ARE FROM GROUND TO FRAME DATUM LINE; **LH** IS FROM GROUND TO TOP OF FLOOR RIBS.

— ***H** IS TOP OF FRAME AT ℄ OF REAR AXLE TO TOP OF TIRE IN JOUNCE

— ***L** IS FROM OUTSIDE EDGE OF SHACKLE EYEBOLT

— ***W** IS FROM FRAME TO TOP OF TIRE IN JOUNCE

AXLE/TIRE/VEHICLE HEIGHT DATA
SUPER DUTY F-250/350 SUPERCAB
STYLESIDE PICKUP – 4X2/4X4

2003
MODEL YEAR

MODEL	WB	GVWR	BASE TIRE	F HEIGHT AT FRONT WHEEL (5)		R HEIGHT AT REAR AXLE (5)		LH(5)(6)		CH(5)		H	J	K	L	* L	M	AA(7)	BB(8)	CC(8)	FW	RW	OW	CW	TH	* H	TW	* W
				CURB(3)	LOADED(4)	CURB(3)	LOADED(4)	EMPTY	LOADED	EMPTY	LOADED																	
Super Duty F-250 SuperCab 4x2	3602 [141.8]	8800	LT235/85R16E	526 [20.7]	515 [20.3]	632 [24.9]	505 [19.9]	861 [33.9]	698 [27.5]	1943 [76.5]	1869 [73.6]	162.7 [6.4]	156.6 [6.2]	165 [6.5]	1143 [45.0]	1271 [50.0]	45 [1.8]	259 [10.2]	792 [31.2]	375 [14.8]	1736 [68.3]	1729 [68.1]	1983 [78.1]	—	390 [15.4]	233 [9.2]	716 [28.2]	254 [10.0]
	4014 [158.0]			526 [20.7]	515 [20.3]	628 [24.7]	505 [19.9]	852 [33.6]	698 [27.5]	1943 [76.5]	1870 [73.6]																	
Super Duty F-250 SuperCab 4x4	3602 [141.8]	8800	LT235/85R16E	624 [24.6]	604 [23.8]	683 [26.9]	558 [22.0]	894 [35.1]	737 [29.0]	2008 [79.0]	1935 [76.2]	162.7 [6.4]	160.7 [6.3]	165 [6.5]	1143 [45.0]	1271 [50.0]	45 [1.8]	259 [10.2]	792 [31.2]	375 [14.8]	1736 [68.3]	1729 [68.1]	1983 [78.1]	—	298 [11.7]	141 [5.6]	727 [28.6]	262 [10.3]
	4014 [158.0]			621 [24.4]	604 [23.8]	679 [26.7]	558 [22.0]	887 [34.9]	738 [29.0]	2008 [79.0]	1938 [76.3]																	
Super Duty F-350 SuperCab 4x2	3602 [141.8]	9900(1)	LT265/75R16E	525 [20.7]	515 [20.3]	632 [24.9]	505 [19.9]	861 [33.9]	698 [27.5]	1952 [76.8]	1865 [73.4]	162.7 [6.4]	156.6 [6.2]	165 [6.5]	1143 [45.0]	1271 [50.0]	45 [1.8]	278 [10.9]	781 [30.7]	371 [14.6]	1736 [68.3]	1745 [68.7]	2007 [79.0]	—	376 [14.8]	219 [8.6]	707 [27.8]	245 [9.6]
	4014 [158.0]	9900(1)	LT265/75R16E	526 [20.7]	515 [20.3]	627 [24.7]	505 19.9]	852 [33.5]	698 [27.5]	1963 [77.3]	1870 [73.6]	163.1 [6.4]	156.3 [6.2]	165 [6.5]	1143 [45.0]	1271 [50.0]	45 [1.8]	278 [10.9]	781 [30.7]	371 [14.6]	1736 [68.3]	1745 [68.7]	2007 [79.0]	—	376 [14.8]	219 [8.6]	707 [27.8]	245 [9.6]
		11,200(2) DRW	LT215/85R16E	518 [20.4]	504 [19.9]	633 [24.9]	494 [19.5]	860 [33.9]	687 [27.0]	1939 [76.3]	1850 [72.8]	163.1 [6.4]	159.3 [6.3]	177 [7.0]	1143 [45.0]	1271 [50.0]	45 [1.8]	229 [9.0]	748 [29.4]	355 [14.0]	1736 [68.3]	—	2380 [93.7]	1880 [74.0]	379 [14.9]	222 [8.7]	664 [26.1]	202 [8.0]
Super Duty F-350 SuperCab 4x4	3602 [141.8]	9900(1)	LT265/75R16E	625 [24.6]	604 [23.8]	730 [28.7]	604 [23.8]	959 [37.7]	798 [31.4]	2051 [80.7]	1964 [77.3]	162.7 [6.4]	148.8 [5.9]	165 [6.5]	1143 [45.0]	1271 [50.0]	45 [1.8]	278 [10.9]	781 [30.7]	371 [14.6]	1736 [68.3]	1729 [68.1]	2007 [79.0]	—	285 [11.2]	128 [5.0]	715 [28.1]	253 [10.0]
	4014 [158.0]	9900(1)	LT265/75R16E	621 [24.4]	604 [23.8]	725 [28.6]	604 [23.8]	946 [37.2]	796 [31.3]	2039 [80.3]	1960 [77.2]	163.1 [6.4]	159.4 [7.0]	165 [6.5]	1143 [45.0]	1271 [50.0]	45 [1.8]	278 [10.9]	781 [30.7]	371 [14.6]	1736 [68.3]	1729 [68.1]	2007 [79.0]	—	285 [11.2]	128 [5.0]	715 [28.1]	253 [10.0]
		11,200(2) DRW	LT235/85R16E	623 [24.5]	607 [23.9]	698 [27.4]	561 [22.1]	909 [35.8]	741 [29.2]	2019 [79.5]	1959 [77.1]	163.1 [6.4]	149.9 [5.9]	177 [7.0]	1143 [45.0]	1271 [50.0]	45 [1.8]	259 [10.2]	792 [31.2]	375 [14.8]	1736 [68.3]	—	2405 [94.7]	1880 [74.0]	317 [12.5]	160 [6.3]	664 [26.1]	202 [8.0]

DRW — Dual Rear Wheels
(1) — 9700 lb California
(2) — 11,000 lb California
(3) — Height at base curb weight with standard springs
(4) — Loaded height at spring rating with standard springs

(5) — The Height Data shown represents dimensions of a base/standard vehicle with no options. Actural height may vary due to production tolerances [completed vehicles only].
(6) — Distance from Pickup Box Floor to Frame Datum Line is 211 [8.3] at front, 199 [7.8] at rear.
(7) — AA is measured at 80 psi for all season tire.
(8) — BB/CC are measured at design at 60 psi.
— Static load rating of design and curb weight are taken at 60 psi.

@ — The top of the spring seat is below datum line.
*H — Top of frame at ℄ of rear axle to top of tire in jounce
*L — From outside edge of shackle eyebolt
*W — From frame to top of tire in jounce

NOTES — [ ] DIMENSIONS ARE INCHES.
— **F** AND **R** VEHICLE HEIGHT DIMENSIONS ARE FROM GROUND TO FRAME DATUM LINE.
— **LH** IS FROM GROUND TO TOP OF FLOOR RIBS.

AXLE/TIRE/VEHICLE HEIGHT DATA
SUPER DUTY F-250/350 CREW CAB
STYLESIDE PICKUP – 4X2/4X4

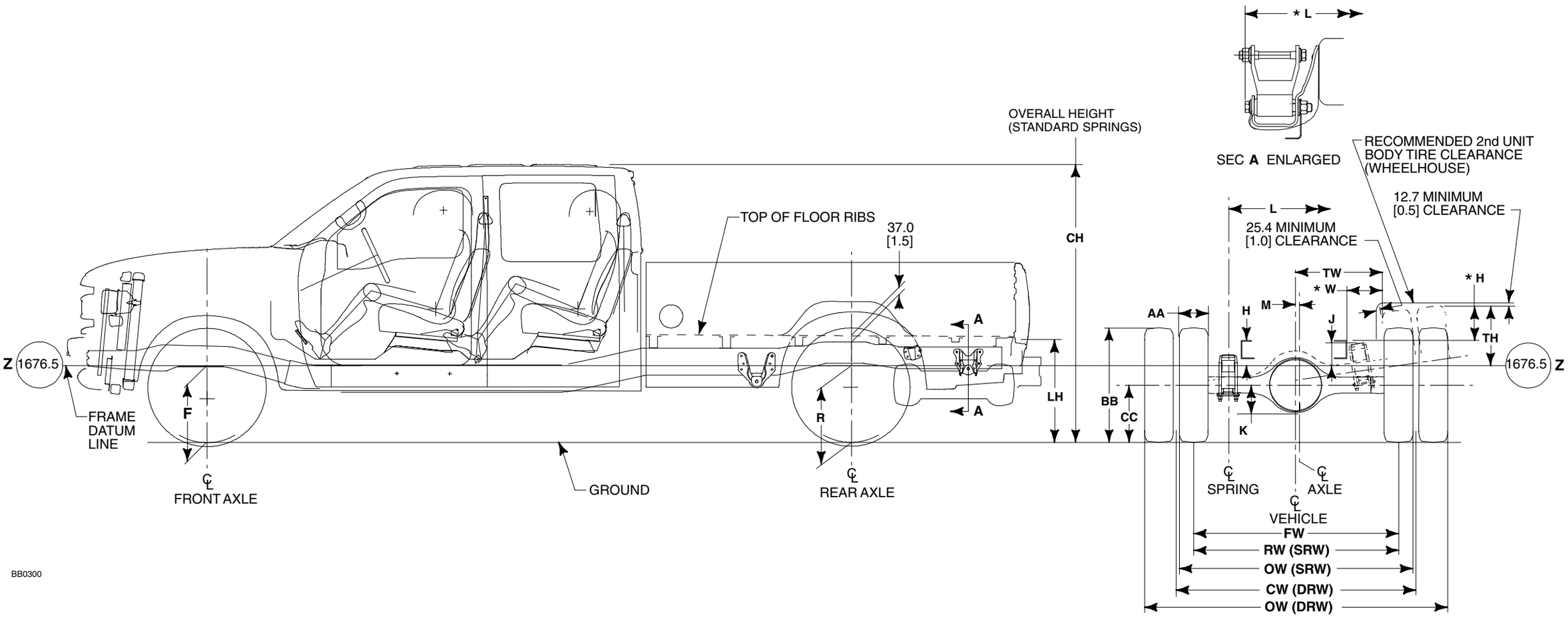

NOTES — [ ] DIMENSIONS ARE INCHES.

— **F** AND **R** VEHICLE HEIGHT DIMENSIONS ARE FROM GROUND TO FRAME DATUM LINE; **LH** IS FROM GROUND TO TOP OF FLOOR RIBS.

— ***H** IS TOP OF FRAME AT ℄ OF REAR AXLE TO TOP OF TIRE IN JOUNCE

— ***L** IS FROM OUTSIDE EDGE OF SHACKLE EYEBOLT

— ***W** IS FROM FRAME TO TOP OF TIRE IN JOUNCE

AXLE/TIRE/VEHICLE HEIGHT DATA
SUPER DUTY F-250/350 CREW CAB
STYLESIDE PICKUP – 4X2/4X4

MODEL	WB	GVWR	BASE TIRE	F HEIGHT AT FRONT WHEEL (5)		R HEIGHT AT REAR AXLE (5)		LH(5)(6)		CH(5)		H	J	K	L	* L	M	AA(7)	BB(8)	CC(8)	FW	RW	OW	CW	TH	* H	TW	* W
				CURB(3)	LOADED(4)	CURB(3)	LOADED(4)	EMPTY	LOADED	EMPTY	LOADED																	
Super Duty F-250 Crew Cab 4x2	3967 [156.2]	8800	LT235/85R16E	533 [21.0]	515 [20.3]	624 [24.6]	505 [19.9]	847 [33.3]	696 [27.4]	1960 [77.2]	1883 [74.1]	162.7 [6.4]	156.6 [6.2]	165 [6.5]	1143 [45.0]	1271 [50.0]	45 [1.8]	259 [10.2]	792 [31.2]	375 [14.8]	1736 [68.3]	1729 [68.1]	1983 [78.1]	—	390 [15.4]	233 [9.2]	716 [28.2]	254 [10.0]
	4379 [172.4]			530 [20.9]	515 [20.3]	622 [24.5]	505 [19.9]	842 [33.2]	698 [27.5]	1957 [77.0]	1884 [74.2]																	
Super Duty F-250 Crew Cab 4x4	3967 [156.2]	8800	LT235/85R16E	632 [24.9]	604 [23.8]	722 [28.4]	558 [22.0]	880 [34.6]	738 [29.0]	2027 [79.8]	1950 [76.8]	163.1 [6.4]	159.4 [6.3]	165 [6.5]	1143 [45.0]	1271 [50.0]	45 [1.8]	259 [10.2]	792 [31.2]	375 [14.8]	1736 [68.3]	1729 [68.1]	1983 [78.1]	—	298 [11.7]	141 [5.6]	727 [28.6]	262 [10.3]
	4379 [172.4]			628 [24.7]	604 [23.8]	675 [26.5]	558 [22.0]	878 [34.6]	739 [29.1]	2022 [79.6]	1952 [76.8]																	
Super Duty F-350 Crew Cab 4x2	3967 [156.2]	9900(1)	LT265/75R16E	532 [20.9]	515 [20.3]	624 [24.6]	505 [19.9]	847 [33.3]	697 [27.4]	1955 [77.0]	1879 [74.0]	162.7 [6.4]	156.6 [6.2]	165 [6.5]	1143 [45.0]	1271 [50.0]	45 [1.8]	278 [10.9]	781 [30.7]	371 [14.6]	1736 [68.3]	1729 [68.1]	2007 [79.0]	—	376 [14.8]	219 [8.6]	707 [27.8]	245 [9.6]
		11,200(2) DRW	LT235/85R16E	520 [20.5]	504 [19.9]	629 [24.8]	494 [19.5]	856 [33.7]	687 [27.0]	1983 [78.1]	1883 [74.1]	162.7 [6.4]	159.4 [6.3]	177 [7.0]	1143 [45.0]	1271 [50.0]	45 [1.8]	229 [9.0]	748 [29.4]	355 [14.0]	1736 [68.3]	—	2380 [93.7]	1880 [74.0]	379 [14.9]	222 [8.7]	664 [26.1]	202 [8.0]
	4379 [172.4]	9900(1)	LT265/75R16E	529 [20.8]	515 [20.3]	622 [24.5]	505 19.9]	842 [33.1]	698 [27.5]	1964 [77.3]	1880 [74.0]	163.1 [6.4]	156.6 [6.2]	165 [6.5]	1143 [45.0]	1271 [50.0]	45 [1.8]	278 [10.9]	781 [30.7]	371 [14.6]	1736 [68.3]	1729 [68.1]	2007 [79.0]	—	376 [14.8]	219 [8.6]	707 [27.8]	245 [9.6]
		11,200(2) DRW	LT235/85R16E	524 [20.6]	504 [19.9]	627 [24.7]	494 [19.5]	850 [3359]	686 [27.0]	1976 [77.8]	1884 [74.2]	163.1 [6.4]	159.1 [6.2]	177 [7.0]	1143 [45.0]	1271 [50.0]	45 [1.8]	229 [9.0]	748 [29.4]	355 [14.0]	1736 [68.3]	—	2380 [93.7]	1880 [74.0]	379 [14.9]	222 [8.7]	664 [26.1]	202 [8.0]
Super Duty F-350 Crew Cab 4x4	3967 [156.2]	9900(1)	LT265/75R16E	632 [24.9]	604 [23.8]	694 [27.3]	561 [22.0]	912 [35.9]	745 [29.3]	1958 [77.1]	1878 [73.9]	162.7 [6.4]	159.4 [6.3]	165 [6.5]	1143 [45.0]	1271 [50.0]	45 [1.8]	278 [10.9]	781 [30.7]	371 [14.6]	1736 [68.3]	1729 [68.1]	2007 [79.0]	—	285 [11.2]	128 [5.0]	715 [28.1]	253 [10.0]
		11,200(2) DRW	LT235/85R16E	622 [24.2]	607 [23.9]	694 [27.3]	561 [22.0]	906 [35.7]	741 [29.2]	2033 [80.0]	1955 [77.0]	162.7 [6.4]	149.9 [5.9]	177 [7.0]	1143 [45.0]	1271 [50.0]	45 [1.8]	259 [10.2]	792 [31.2]	375 [14.8]	1736 [68.3]	—	2405 [94.7]	1880 [74.0]	317 [12.5]	160 [6.3]	664 [26.1]	202 [8.0]
	4379 [172.4]	9900(1)	LT265/75R16E	628 [24.7]	604 [23.8]	720 [28.4]	604 [23.8]	941 [37.0]	798 [31.4]	1957 [77.0]	1879 [74.0]	163.1 [6.4]	159.4 [6.3]	165 [6.5]	1143 [45.0]	1271 [50.0]	45 [1.8]	278 [10.9]	781 [30.7]	371 [14.6]	1736 [68.3]	1729 [68.1]	2007 [79.0]	—	285 [11.2]	128 [5.0]	715 [28.1]	253 [10.0]
		11,200(2) DRW	LT235/85R16E	629 [24.5]	607 [23.9]	690 [27.1]	561 [22.0]	897 [35.3]	762 [30.0]	2031 [80.0]	1955 [77.0]	163.1 [6.4]	149.9 [5.9]	177 [7.0]	1143 [45.0]	1271 [50.0]	45 [1.8]	259 [10.2]	792 [31.2]	375 [14.8]	1736 [68.3]	—	2405 [94.7]	1880 [74.0]	317 [12.5]	160 [6.3]	664 [26.1]	202 [8.0]

DRW — Dual Rear Wheels
(1) — 9700 lb California
(2) — 11,000 lb California
(3) — Height at base curb weight with standard springs
(4) — Loaded height at spring rating with standard springs
(5) — The Height Data shown represents dimensions of a base/standard vehicle with no options. Actural height may vary due to production tolerances [completed vehicles only].
(6) — Distance from Pickup Box Floor to Frame Datum Line is 211 [8.3] at front, 199 [7.8] at rear.
(7) — AA is measured at 80 psi for all season tire.
(8) — BB/CC are measured at design at 60 psi.
— Static load rating of design and curb weight are taken at 60 psi.

@ — The top of the spring seat is below datum line.
*H — Top of frame at ℄ of rear axle to top of tire in jounce
*L — From outside edge of shackle eyebolt
*W — From frame to top of tire in jounce

NOTES — [ ] DIMENSIONS ARE INCHES.
— **F** AND **R** VEHICLE HEIGHT DIMENSIONS ARE FROM GROUND TO FRAME DATUM LINE.
— **LH** IS FROM GROUND TO TOP OF FLOOR RIBS.

DIMENSIONAL DATA
SUPER DUTY F-350/450/550
REGULAR CHASSIS CAB 4X2/4X4

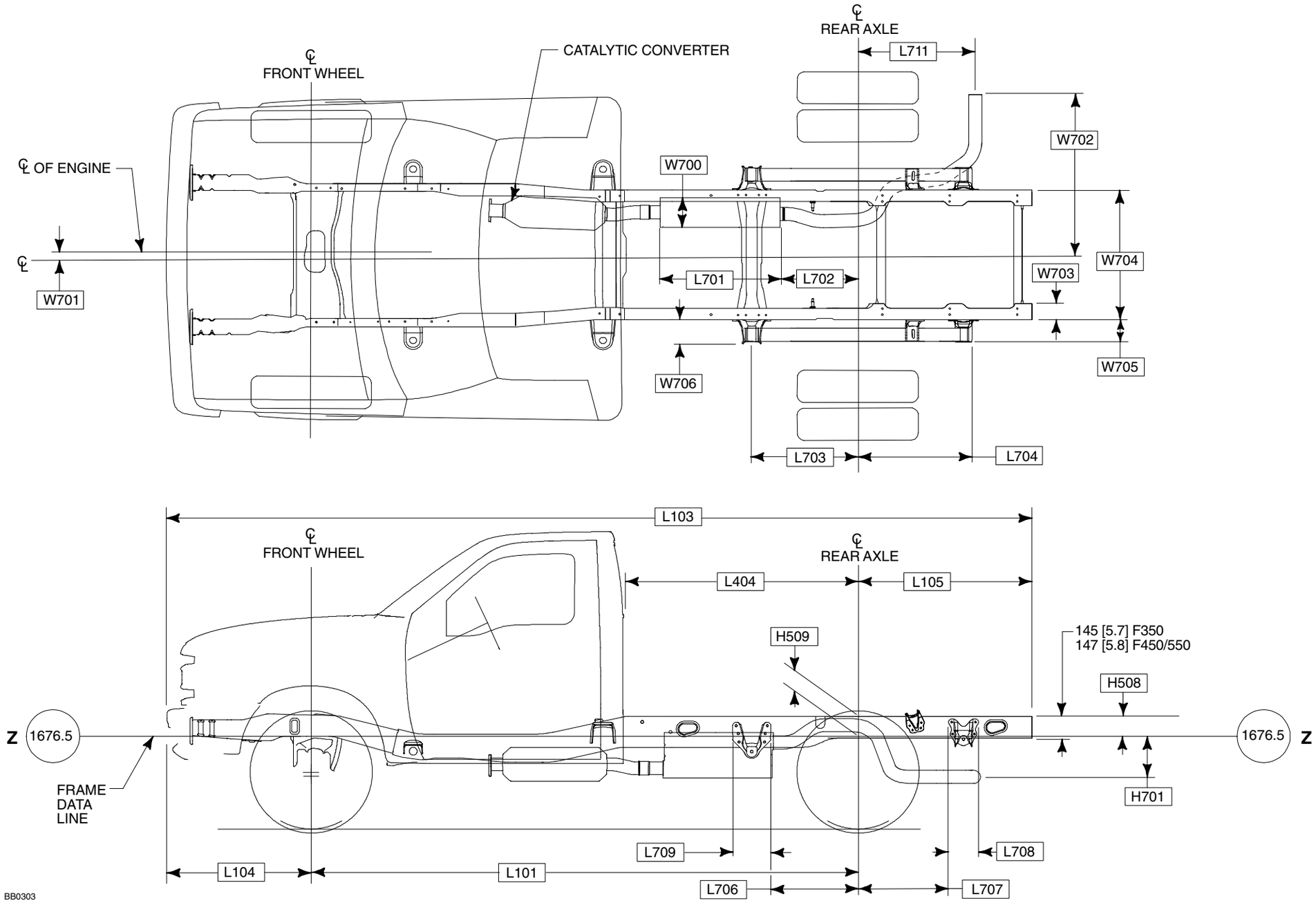

NOTES — [ ] DIMENSIONS ARE INCHES.
— AXLE/TIRE/VEHICLE HEIGHT DATA, PAGES 164-165.
— GROUND CLEARANCE DATA, PAGES 170-172.

DIMENSIONAL DATA
SUPER DUTY F-350/450/550
REGULAR CHASSIS CAB 4X2/4X4

2003
MODEL YEAR

CODE	DESCRIPTION	F-350						F-450				F-550			
		SRW		DRW		DRW		DRW				DRW			
		4x2	4x4	4x2	4x4	4x2	4x4	4x2/4x4				4x2/4x4			
H508	FRAME DATUM LINE TO TOP OF FRAME	124 [4.9]		124 [4.9]		124 [4.9]		125 [4.9]				125 [4.9]			
H509	FRAME DATUM LINE TO TOP OF FRAME AT REAR AXLE	124 [4.9]		124 [4.9]		124 [4.9]		125 [4.9]				125 [4.9]			
H701	℄ OF OUTLET PIPE TO FRAME DATUM LINE — 5.4L/6.8L/7.3L/6.0L	239 [9.4]		239 [9.4]		239 [9.4]		239 [9.4]				239 [9.4]			
L101	WHEELBASE	3576 [140.8]		3576 [140.8]		4186 [164.8]		3576 [140.8]	4186 [164.8]	4795 [188.8]	5100 [200.8]	3576 [140.8]	4186 [164.8]	4795 [188.8]	5100 [200.8]
L103	OVERALL LENGTH	5732 [225.7]		5732 [225.7]		6343 [249.7]		5732 [225.7]	6341 [249.7]	6952 [273.7]	7257 [285.7]	5732 [225.7]	6341 [249.7]	6952 [273.7]	7257 [285.7]
L104	FRONT OVERHANG	950 [37.4]		950 [37.4]		950 [37.4]		950 [37.4]				950 [37.4]			
L105	REAR OVERHANG	1207 [47.5]		1207 [47.5]		1207 [47.5]		1207 [47.5]				1207 [47.5]			
L404	BACK OF CAB TO ℄ OF REAR AXLE	1524 [60.0]		1524 [60.0]		2134 [84.0]		1524 [60.0]	2134 [84.0]	2743 [108.0]	3048 [120.0]	1524 [60.0]	2134 [84.0]	2743 [108.0]	3048 [120.0]
L701	MUFFLER LENGTH — 5.4L/6.8L	609.5 [24.0]		609.5 [24.0]		609.5 [24.0]		609.5 [24.0]				609.5 [24.0]			
	— 7.3L/6.0L	508 [20.0]/661 [26.0]		508 [20.0]/661 [26.0]		508 [20.0]/661 [26.0]		508 [20.0]/661 [26.0]				508 [20.0]/661 [26.0]			
L702	MUFFLER REAR TO ℄ REAR AXLE — 5.4L/6.8L	546.5 [21.5]		546.5 [21.5]		546.5 [21.5]		546.5 [21.5]				546.5 [21.5]			
	— 7.3L	638 [25.1]		638 [25.1]		638 [25.1]		638 [25.1]				638 [25.1]			
	— 6.0L	596 [23.5]	602 [23.7]	596 [23.5]	604 [23.8]	596 [23.5]	606 [23.9]	582 [22.9]	582 [22.9]			586 [23.0]	593 [23.3]		
L703	REAR SPRING FRONT EYE TO REAR AXLE	663 [26.1]	671 [26.4]	663 [26.1]	671 [26.4]	663 [26.1]	671 [26.4]	653 [25.7]				654 [25.8]			
L704	℄ REAR AXLE TO ℄ REAR SPRING SHACKLE BRACKET	748 [29.4]	739 [29.1]	748 [29.4]	739 [29.1]	748 [29.4]	739 [29.1]	757 [29.8]				755 [29.7]			
L706	REAR OF FRONT SPRING BRACKET TO ℄ REAR AXLE	536 [21.1]	544 [21.4]	536 [21.1]	544 [21.4]	536 [21.1]	544 [21.4]	525 [20.7]				526 [20.7]			
L707	℄ REAR AXLE TO FRONT OF REAR SPRING SHACKLE BRACKET	648 [25.5]	639 [25.2]	648 [25.5]	639 [25.2]	648 [25.5]	639 [25.2]	645 [25.4]				643 [25.3]			
L708	REAR SPRING SHACKLE BRACKET WIDTH	200 [7.9]		200 [7.9]		200 [7.9]		225 [8.9]				225 [8.9]			
L709	FRONT SPRING HANGER BRACKET WIDTH	253 [10.0]		253 [10.0]		253 [10.0]		256 [10.1]				256 [10.1]			
L711	℄ OF REAR AXLE TO ℄ OF EXHAUST PIPE														
	— 5.4L/6.8L	664.6 [26.2]		664.6 [26.2]		664.6 [26.2]		664.6 [26.2]				664.6 [26.2]			
	— 7.3L	664.2 [26.1]		664.2 [26.1]		664.2 [26.1]		664.2 [26.1]				664.2 [26.1]			
	— 6.0L	698 [27.4]	690 [27.1]	696 [27.4]	687 [27.0]	696 [27.4]	687 [27.0]	709 [27.9]	709 [27.9]			705 [27.8]	698 [27.4]		
W700	MUFFLER CROSS SECTION — 5.4L/6.8L/7.3L	7 x 9/195x291		7 x 9/195x291		7 x 9/195x291		7 x 9/195x291				7 X 9/195x291			
	— 6.0L	7.25 x 11		7.25 x 11		7.25 x 11		7.25 x 11				7.25 x 11			
W701	DISTANCE BETWEEN ℄ ENGINE/VEHICLE	45 [1.8]		45 [1.8]		45 [1.8]		45 [1.8]				45 [1.8]			
W702	END OF TAILPIPE TO ℄ VEHICLE — 5.4L/6.8L/7.3L	948 [37.3]		948 [37.3]		948 [37.3]		948 [37.3]				948 [37.3]			
	— 6.0L	1027 [40.4]		1027 [40.4]		1027 [40.4]		1027 [40.4]				1027 [40.4]			
W703	FRAME RAIL WIDTH	107 [4.2]		107 [4.2]		107 [4.2]		108 [4.2]				108 [4.2]			
W704	REAR FRAME WIDTH	866 [34.1]		866 [34.1]		866 [34.1]		868 [34.2]				868 [34.2]			
W705	DISTANCE FROM FRAME TO OUTSIDE OF REAR SPRING SHACKLE BRACKET	149 [5.9]		149 [5.9]		149 [5.9]		151 [5.9]				151 [5.9]			
W706	DISTANCE FROM FRAME TO OUTSIDE OF REAR SPRING HANGER BRACKET	160 [6.3]		160 [6.3]		160 [6.3]		151 [5.9]				151 [5.9]			

NOTES — [ ] DIMENSIONS ARE INCHES.
— AXLE/TIRE/VEHICLE HEIGHT DATA, PAGES 164-165.
— GROUND CLEARANCE DATA, PAGES 170-172.

DIMENSIONAL DATA
SUPER DUTY F-350/450/550
SUPER CHASSIS CAB 4X2/4X4

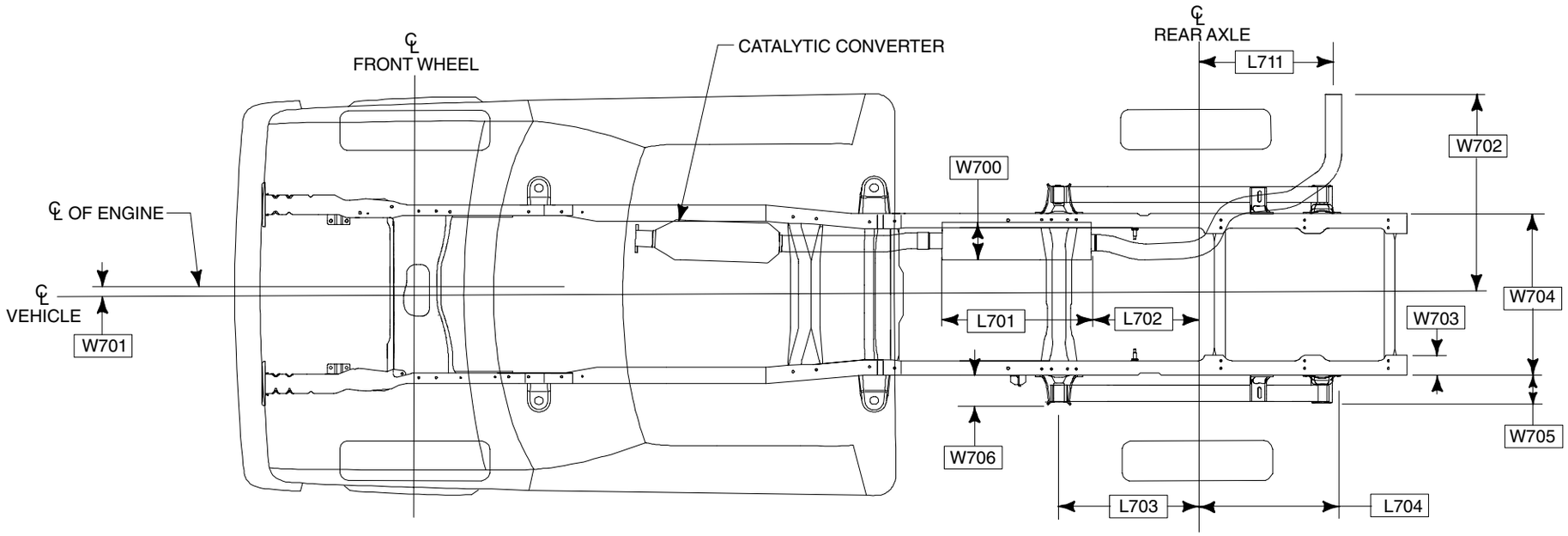

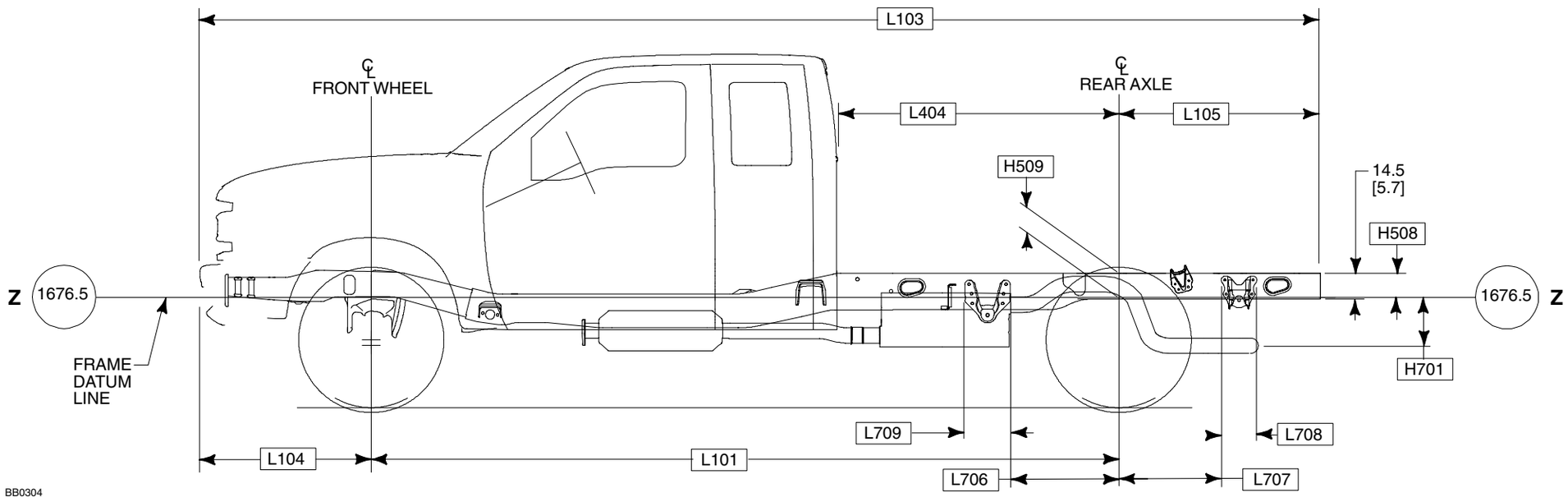

NOTES — [ ] DIMENSIONS ARE INCHES.
— AXLE/TIRE/VEHICLE HEIGHT DATA, PAGES 166-167.
— GROUND CLEARANCE DATA, PAGES 170-172.

DIMENSIONAL DATA
SUPER DUTY F-350/450/550
SUPER CHASSIS CAB 4X2/4X4

2003
MODEL YEAR

CODE	DESCRIPTION	F-350				F-450		F-550	
		SRW		DRW		DRW		DRW	
		4x2	4x4	4x2	4X4	4x2/4X4		4x2/4X4	
H508	FRAME DATUM LINE TO TOP OF FRAME	124 [4.9]		124 [4.9]		125 [4.9]		125 [4.9]	
H509	FRAME DATUM LINE TO TOP OF FRAME AT REAR AXLE	124 [4.9]		124 [4.9]		125 [4.9]		125 [4.9]	
H701	℄ OF OUTLET PIPE TO FRAME DATUM LINE — WITH 5.4L/6.8L/7.3L/6.0L	239 [9.4]		239 [9.4]		239 [9.4]		239 [9.4]	
L101	WHEELBASE	4110 [161.8]		4110 [161.8]		4110 [161.8]		4110 [161.8]	
L103	OVERALL LENGTH	6267 [246.7]		6267 [246.7]		6267 [246.7]		6267 [246.7]	
L104	FRONT OVERHANG	950 [37.4]		950 [37.4]		950 [37.4]		950 [37.4]	
L105	REAR OVERHANG	1207 [47.5]		1207 [47.5]		1206 [47.5]		1207 [47.5]	
L404	BACK OF CAB TO ℄ OF REAR AXLE	1524 [60.0]		1524 [60.0]		1524 [60.0]		1524 [60.0]	
L701	MUFFLER LENGTH — WITH 5.4L/6.8L	609.5 [24.0]		609.5 [24.0]		609.5 [24.0]		609.5 [24.0]	
	— WITH 7.3L/6.0L	508 [20.0]/661 [26.0]		508 [20.0]/661 [26.0]		508 [20.0]/661 [26.0]		508 [20.0]/661 [26.0]	
L702	MUFFLER REAR ℄ TO REAR AXLE — WITH 5.4L/6.8L	546.5 [21.5]		546.5 [21.5]		546.5 [21.5]		546.5 [21.5]	
	— WITH 7.3L	638.3 [25.1]		638.3 [25.1]		638.3 [25.1]		638.3 [25.1]	
	— WITH 6.0L	595.9 [23.5]	602.1 [23.7]	595.9 [23.5]	604.1 [23.7]	582.8 [23.0]	589.4 [23.2]	586.8 [23.1]	593.4 [23.3]
L703	REAR SPRING FRONT EYE TO ℄ REAR AXLE	663 [26.1]	671 [26.4]	663 [26.1]	671 [26.4]	653 [25.7]		654 [25.8]	
L704	℄ REAR AXLE TO ℄ REAR SPRING SHACKLE BRACKET	748 [29.4]	739 [29.1]	748 [29.4]	739 [29.1]	757 [29.8]		755 [29.7]	
L706	REAR OF FRONT SPRING BRACKET TO ℄ REAR AXLE	536 [21.1]	544 [21.1]	536 [21.1]	544 [21.1]	525 [20.7]		526 [20.7]	
L707	℄ REAR AXLE TO FRONT OF REAR SPRING SHACKLE BRACKET	648 [25.5]	639 [25.2]	648 [25.5]	639 [25.2]	645 [25.4]		643 [25.3]	
L708	REAR SPRING SHACKLE BRACKET WIDTH	200 [7.9]		200 [7.9]		225 [8.9]		225 [8.9]	
L709	FRONT SPRING HANGER BRACKET WIDTH	253 [10.0]		253 [10.0]		256 [10.1]		256 [10.1]	
L711	℄ OF REAR AXLE TO ℄ OF EXHAUST PIPE — WITH 5.4L/6.8L	664.6 [26.2]		664.6 [26.2]		664.6 [26.2]		664.6 [26.2]	
	— WITH 7.3L	664.2 [26.1]		664.2 [26.1]		664.2 [26.1]		664.2 [26.1]	
	— WITH 6.0L	695.9 [27.4]	689.7 [27.1]	695.9 [27.4]	689.7 [27.1]	709 [30.0]	707 [27.8]	705 [27.8]	698.4 [27.5]
W700	MUFFLER CROSS SECTION — WITH 5.4L/6.8L	7 X 9		7 X 9		7 X 9		7 X 9	
	— WITH 7.3L/6.0L	7.25 X 11/195.0 X 291.0		7.25 X 11/195.0 X 291.0		7.25 X 11/195.0 X 291.0		7.25 X 11/195.0 X 291.0	
W701	DISTANCE BETWEEN ℄ ENGINE/VEHICLE	45 [1.8]		45 [1.8]		45 [1.8]		45 [1.8]	
W702	END OF TAILPIPE TO ℄ VEHICLE — WITH 5.4L/6.8L/7.3L — 6.0L	948 [37.3] 1027 [40.4]		948 [37.3] 1027 [40.4]		948 [37.3] 1027 [40.4]		948 [37.3] 1027 [40.4]	
W703	FRAME RAIL WIDTH	107 [4.2]		107 [4.2]		108 [4.2]		108 [4.2]	
W704	REAR FRAME WIDTH	866 [34.1]		866 [34.1]		868 [34.2]		868 [34.2]	
W705	DISTANCE FROM FRAME TO OUTSIDE OF REAR SPRING SHACKLE BRACKET	149 [5.9]		149 [5.9]		151 [5.9]		151 [5.9]	
W706	DISTANCE FROM FRAME TO OUTSIDE OF REAR SPRING HANGER BRACKET	160 [6.3]		160 [6.3]		151 [5.9]		151 [5.9]	

NOTES — [ ] DIMENSIONS ARE INCHES.
— AXLE/TIRE/VEHICLE HEIGHT DATA, PAGES 166-167.
— GROUND CLEARANCE DATA, PAGES 170-172.

DIMENSIONAL DATA
SUPER DUTY F-350/450/550
CREW CHASSIS CAB 4X2/4X4

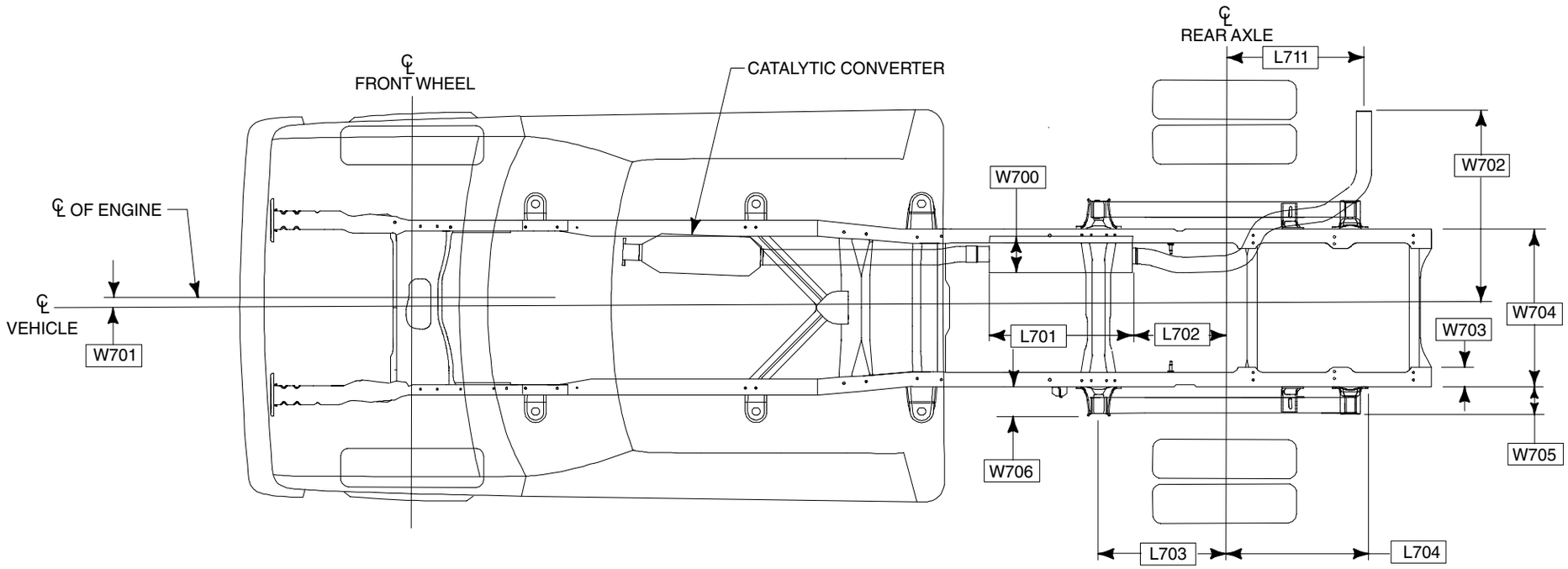

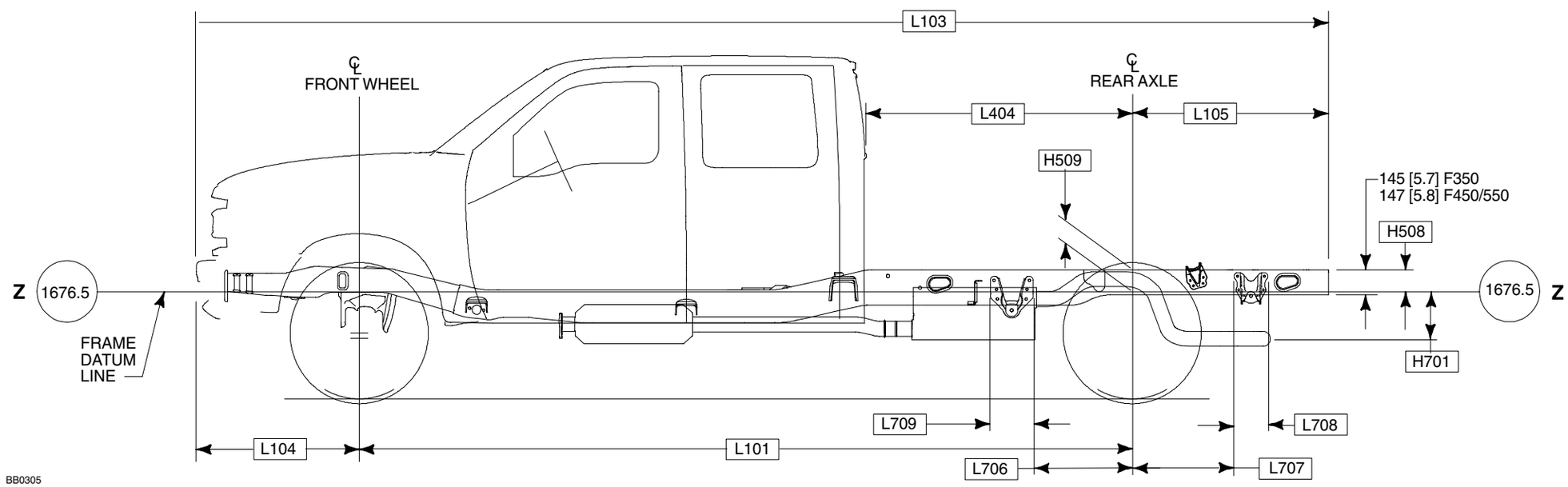

NOTES — [ ] DIMENSIONS ARE INCHES.
— AXLE/TIRE/VEHICLE HEIGHT DATA, PAGES 168-169.
— GROUND CLEARANCE DATA, PAGES 170-172.

DIMENSIONAL DATA
SUPER DUTY F-350/450/550
CREW CHASSIS CAB 4X2/4X4

CODE	DESCRIPTION	F-350				F-450		F-550	
		SRW		DRW		DRW		DRW	
		4x2	4x4	4x2	4X4	4x2/4X4		4x2/4X4	
H508	FRAME DATUM LINE TO TOP OF FRAME	124 [4.9]		124 [4.9]		125 [4.9]		125 [4.9]	
H509	FRAME DATUM LINE TO TOP OF FRAME AT REAR AXLE	124 [4.9]		124 [4.9]		125 [4.9]		125 [4.9]	
H701	℄ OF OUTLET PIPE TO FRAME DATUM LINE — WITH 5.4L/6.8L/7.3L/6.0L	239 [9.4]		239 [9.4]		239 [9.4]		239 [9.4]	
L101	WHEELBASE	4475 [176.2]		4475 [176.2]		4475 [176.2]	5085 [200.2]	4475 [176.2]	5085 [200.2]
L103	OVERALL LENGTH	6632 [261.1]		6632 [261.1]		6632 [261.1]	7241 [285.1]	6632 [261.1]	7241 [285.1]
L104	FRONT OVERHANG	950 [37.4]		950 [37.4]		950 [37.4]		950 [37.4]	
L105	REAR OVERHANG	1207 [47.5]		1207 [47.5]		1207 [47.5]		1207 [47.5]	
L404	BACK OF CAB TO ℄ OF REAR AXLE	1524 [60.0]		1524 [60.0]		1524 [60.0]	2134 [84.0]	1524 [60.0]	2134 [84.0]
L701	MUFFLER LENGTH — WITH 5.4L/6.8L	609.5 [24.0]		609.5 [24.0]		609.5 [24.0]		609.5 [24.0]	
	— WITH 7.3L/6.0L	508 [20.0]/661 [26.0]		508 [20.0]/661 [26.0]		508 [20.0]/661 [26.0]		508 [20.0]/661 [26.0]	
L702	MUFFLER REAR ℄ TO REAR AXLE — WITH 5.4L/6.8L	546.5 [21.5]		546.5 [21.5]		546.5 [21.5]		546.5 [21.5]	
	— WITH 7.3L	638.3 [25.1]		638.3 [25.1]		638.3 [25.1]		638.3 [25.1]	
	— WITH 6.0L	593.2 [23.3]	601.5 [23.6]	595.3 [23.4]	603.6 [23.7]	582.4 [22.9]	582.4 [22.9]	586.2 [23.0]	592.8 [23.3]
L703	REAR SPRING FRONT EYE TO ℄ REAR AXLE	663 [26.1]	671 [26.4]	663 [26.1]	671 [26.4]	653 [25.7]		654 [25.8]	
L704	℄ REAR AXLE TO ℄ REAR SPRING SHACKLE BRACKET	748 [29.4]	739 [29.1]	748 [29.4]	739 [29.1]	757 [29.8]		755 [29.7]	
L706	REAR OF FRONT SPRING BRACKET TO ℄ REAR AXLE	536 [21.1]	544 [21.1]	536 [21.1]	544 [21.1]	525 [20.7]		526 [20.7]	
L707	℄ REAR AXLE TO FRONT OF REAR SPRING SHACKLE BRACKET	648 [25.5]	639 [25.2]	648 [25.5]	639 [25.2]	645 [25.4]		643 [25.3]	
L708	REAR SPRING SHACKLE BRACKET WIDTH	200 [7.9]		200 [7.9]		225 [8.9]		225 [8.9]	
L709	FRONT SPRING HANGER BRACKET WIDTH	253 [10.0]		253 [10.0]		256 [10.1]		256 [10.1]	
L711	℄ OF REAR AXLE TO ℄ OF EXHAUST PIPE — WITH 5.4L/6.8L	664.6 [26.2]		664.6 [26.2]		664.6 [26.2]		664.6 [26.2]	
	— WITH 7.3L	664.2 [26.1]		664.2 [26.1]		664.2 [26.1]		664.2 [26.1]	
	— WITH 6.0L	697.9 [27.4]	689.7 [27.1]	695.8 [27.3]	687.5 [27.0]	709 [27.9]	709 [27.9]	705 [27.7]	698.4 [27.4]
W700	MUFFLER CROSS SECTION — WITH 5.4L/6.8L	7 X 9		7 X 9		7 X 9		7 X 9	
	— WITH 7.3L/6.0L	7.25 X 11/195.0 X 291.0		7.25 X 11/195.0 X 291.0		7.25 X 11/195.0 X 291.0		7.25 X 11/195.0 X 291.0	
W701	DISTANCE BETWEEN ℄ ENGINE/VEHICLE	45 [1.8]		45 [1.8]		45 [1.8]		45 [1.8]	
W702	END OF TAILPIPE TO ℄ VEHICLE — WITH 5.4L/6.8L/7.3L — WITH 6.0L	948 [37.3] 1027 [40.4]		948 [37.3] 1027 [40.4]		948 [37.3] 1027 [40.4]		948 [37.3] 1027 [40.4]	
W703	FRAME RAIL WIDTH	107 [4.2]		107 [4.2]		108 [4.2]		108 [4.2]	
W704	REAR FRAME WIDTH	866 [34.1]		866 [34.1]		868 [34.2]		868 [34.2]	
W705	DISTANCE FROM FRAME TO OUTSIDE OF REAR SPRING SHACKLE BRACKET	149 [5.9]		149 [5.9]		151[5.9]		151[5.9]	
W706	DISTANCE FROM FRAME TO OUTSIDE OF REAR SPRING HANGER BRACKET	160 [6.3]		160 [6.3]		151[5.9]		151[5.9]	

NOTES — [ ] DIMENSIONS ARE INCHES.
— AXLE/TIRE/VEHICLE HEIGHT DATA, PAGES 168-169.
— GROUND CLEARANCE DATA, PAGES 170-172.

AXLE/TIRE/VEHICLE HEIGHT DATA
SUPER DUTY F-SERIES
REGULAR CHASSIS CAB

2003
MODEL YEAR

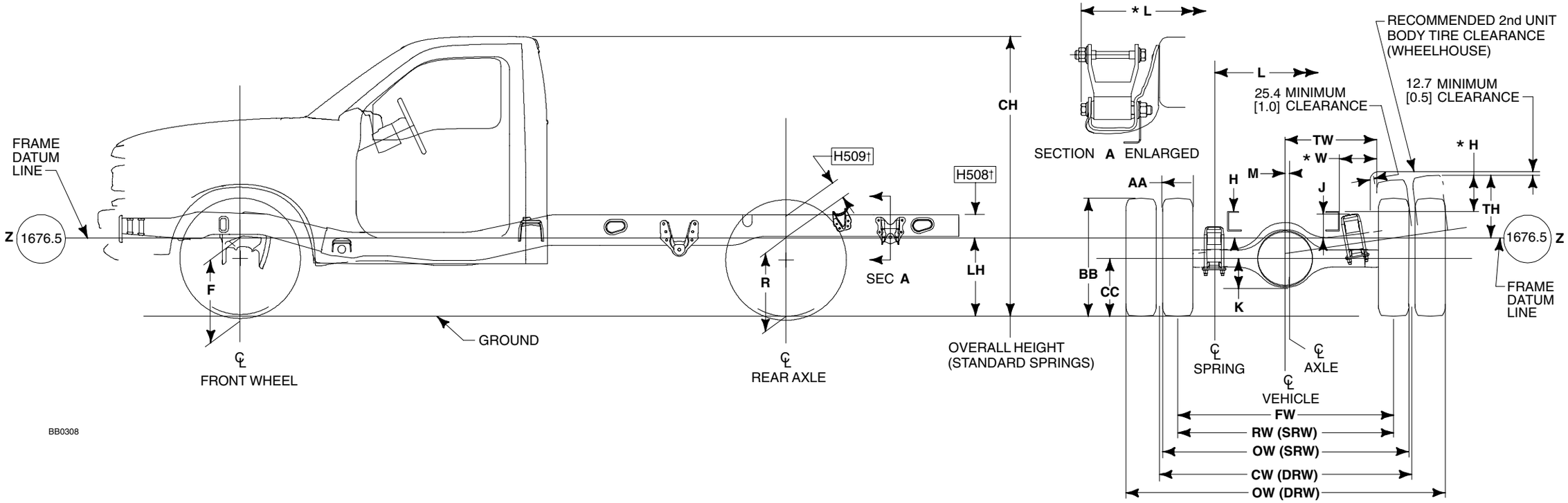

MODEL	WB	GVWR	BASE TIRE	F HEIGHT AT FRONT WHEEL(1)		R HEIGHT AT REAR AXLE(1)		LH(1)(5)		CH(1)		H	J	K	L	*L	M	AA	BB	CC	FW	RW	OW	CW	TH	*H	TW	*W
				BASE(2)	LOADED(3)	BASE(2)	LOADED(3)	EMPTY	LOADED	EMPTY	LOADED																	
Super Duty F-350 Regular Cab 4x2	3576 [140.8]	9900(6)	LT265/75R16E	533 [21.0]	515 [20.3]	648 [25.5]	547 [21.6]	673 [26.5]	539 [21.2]	1924 [75.7]	1877 [73.9]	124.0 [4.88]	172.5 [6.7]	161 [6.3]	1056 [41.55]	1184.0 [46.6]	45 [1.8]	278 [10.9]	781 [30.7]	371 [14.6]	1746 [68.7]	1729 [68.1]	2007 [79.0]	—	394 [15.5]	271 [10.9]	704 [27.7]	271 [10.7]
		11,200(7)(8) DRW	LT235/85R16E	521 [20.5]	504 [19.9]	644 [25.4]	537 [21.2]	688.3 [27.1]	543 [21.4]	1912 [75.3]	1877 [73.9]	124.0 [4.88]	176.5 [6.9]	177 [7.0]	1056 [41.55]	1184.0 [46.6]	45 [1.8]	259 [10.2]	792 [31.2]	375 [14.8]	1746 [68.7]	—	2304 @ [90.7]	1803 @ [71.0]	376 [14.8]	258 [10.2]	626 [24.6]	193 [7.6]
Super Duty F-350 Regular Cab 4x2	4186 [164.8]	11,200(7)(8) DRW	LT235/85R16E	529 [20.8]	504 [19.9]	643 [25.3]	537 [21.2]	678 [26.7]	541 [21.3]	1912 [75.3]	1877 [73.9]	124.0 [4.88]	176.5 [6.9]	177 [7.0]	1056 [41.55]	1184.0 [46.6]	45 [1.8]	259 [10.2]	792 [31.2]	375 [14.8]	1746 [68.7]	—	2304 @ [90.7]	1803 @ [71.0]	376 [14.8]	258 [10.2]	626 [24.6]	193 [7.6]
Super Duty F-350 Regular Cab 4x4	3576 [140.8]	9900(6)	LT265/75R16E	629 [24.8]	604 [23.8]	704 [27.7]	604 [23.8]	715 [28.2]	582 [22.9]	2028 [79.8]	1969 [77.5]	124.0 [4.88]	172.5 [6.7]	165 [6.5]	1056 [41.55]	1184.0 [46.6]	45 [1.8]	278 [10.9]	781 [30.7]	371 [14.6]	1746 [68.7]	1729 [68.1]	2007 [79.0]	—	394 [15.5]	276 [10.9]	704 [27.7]	271 [10.7]
		11,200(7)(8) DRW	LT235/85R16E	614 [24.2]	593 [23.4]	703 [27.7]	594 [23.4]	719 [28.3]	573 [22.6]	2031 [80.0]	1973 [77.7]	124.0 [4.88]	176.5 [6.9]	177 [7.0]	1056 [41.55]	1184.0 [46.6]	45 [1.8]	259 [10.2]	792 [31.2]	375 [14.8]	1746 [68.7]	—	2329 @ [91.7]	1803 @ [71.0]	342 [13.5]	224 [8.8]	624 [24.6]	191 [7.5]
Super Duty F-350 Regular Cab 4x4	4186 [164.8]	11,200(7)(8) DRW	LT235/85R16E	625 [24.6]	593 [23.4]	702 [27.6]	594 [23.4]	711 [28.0]	571 [22.5]	2031 [80.0]	1973 [77.7]	124.0 [4.88]	176.5 [6.9]	177 [7.0]	1056 [41.55]	1184.0 [46.6]	45 [1.8]	259 [10.2]	792 [31.2]	375 [14.8]	1746 [68.7]	—	2329 @ [91.7]	1803 @ [71.0]	342 [13.5]	224 [8.8]	624 [24.6]	191 [7.5]

(1) — The Height Data shown represents dimensions of a base/standard vehicle with no options. Actual height may vary due to production tolerances (completed vehicles only).
(2) — Height at base curb weight with standard spring
(3) — Loaded height at spring rating with standard spring
(4) — Reinforced frame available on 200.8" wheelbase, Regular Cab, 450/550
(5) — LH + H508 [4.9] = height to top of frame
(6) — 9700 lb California (gas engine)
(7) — 11,000 lb California (gas engine)
(8) — 12,500 lb all states (diesel engine)

† — For dimensions, see Page 159 of this section.
*H — Top of frame at ℄ of rear axle to top of tire in jounce
*L — From outside edge of shackle eyebolt
*W — From frame to top of tire in jounce

@ — CW = 1880 [74] and OW = 2380 [93.7] for 4x2,
CW = 1880 [74] and OW = 2405 [94.7] for 4x4
with Ambulance Prep Package (Wide Track Axle). Standard Axle with Ambulance requires ordering "Wide Track Delete" option

NOTES — [ ] DIMENSIONS ARE INCHES.
— **F, R**, AND **LH** VEHICLE HEIGHT DIMENSIONS ARE FROM GROUND TO DATUM LINE.

AXLE/TIRE/VEHICLE HEIGHT DATA
SUPER DUTY F-SERIES
REGULAR CHASSIS CAB

2003
MODEL YEAR

MODEL	WB	GVWR	BASE TIRE	F HEIGHT AT FRONT WHEEL(1)		R HEIGHT AT REAR AXLE(1)		LH(1)(5)		CH(1)		H	J	K	L	*L	M	AA	BB	CC	FW	RW	OW	CW	TH	*H	TW	*W
				BASE(2)	LOADED(3)	BASE(2)	LOADED(3)	EMPTY	LOADED	EMPTY	LOADED																	
Super Duty F-450Regular Cab 4x2	3576 [140.8]	15,000 DRW	225/70R19.5F	674 [26.5]	609 [24.0]	701 [27.6]	610 [24.0]	696 [27.4]	575 [22.6]	2048 [80.6]	1977 [77.8]	125 [4.9]	111 [4.37]	177 [7.0]	1056 [41.55]	1197.6 [47.1]	28 [1.1]	226 [8.9]	792 [31.2]	380 [15.0]	1746 [68.7]	—	2377 [93.6]	1880 [74.0]	352 [13.9]	234 [9.2]	676 [26.6]	242 [9.5]
Super Duty F-450 Regular Cab 4x2	4186 [164.8]	15,000 DRW	225/70R19.5F	671 [26.4]	609 [24.0]	701 [27.6]	610 [24.0]	696 [27.4]	579 [22.8]	2044 [80.5]	1977 [77.8]	125 [4.9]	111 [4.37]	177 [7.0]	1056 [41.55]	1197.6 [47.1]	28 [1.1]	226 [8.9]	792 [31.2]	380 [15.0]	1746 [68.7]	—	2377 [93.6]	1880 [74.0]	352 [13.9]	234 [9.2]	676 [26.6]	242 [9.5]
Super Duty F-450 Regular Cab 4x2	4795 [188.8]	15,000 DRW	225/70R19.5F	671 [26.4]	609 [24.0]	701 [27.6]	610 [24.0]	695 [27.3]	581 [22.9]	2044 [80.5]	1977 [77.8]	125 [4.9]	111 [4.37]	177 [7.0]	1056 [41.55]	1197.6 [47.1]	28 [1.1]	226 [8.9]	792 [31.2]	380 [15.0]	1746 [68.7]	—	2377 [93.6]	1880 [74.0]	352 [13.9]	234 [9.2]	676 [26.6]	242 [9.5]
Super Duty F-450 Regular Cab 4x2	5100(4) [200.8]	15,000 DRW	225/70R19.5F	664 [26.2]	609 [24.0]	700 [27.6]	610 [24.0]	695 [27.3]	583 [23.0]	2038 [80.2]	1977 [77.8]	125 [4.9]	111 [4.37]	177 [7.0]	1056 [41.55]	1197.6 [47.1]	28 [1.1]	226 [8.9]	792 [31.2]	380 [15.0]	1746 [68.7]	—	2377 [93.6]	1880 [74.0]	352 [13.9]	234 [9.2]	676 [26.6]	242 [9.5]
Super Duty F-450 Regular Cab 4x4	3576 [140.8]	15,000 DRW	225/70R19.5F	667 [26.2]	609 [24.0]	701 [27.6]	610 [24.0]	698 [27.5]	577 [2.7]	2051 [80.7]	1977 [77.8]	125 [4.9]	111 [4.37]	177 [7.0]	1056 [41.55]	1197.6 [47.1]	28 [1.1]	226 [8.9]	792 [31.2]	380 [15.0]	1746 [68.7]	—	2377 [93.6]	1880 [74.0]	352 [13.9]	234 [9.2]	676 [26.6]	242 [9.5]
Super Duty F-450 Regular Cab 4x4	4186 [164.8]	15,000 DRW	225/70R19.5F	663 [26.1]	609 [24.0]	701 [27.6]	610 [24.0]	698 [27.5]	581 [22.9]	2044 [80.5]	1977 [77.8]	125 [4.9]	111 [4.37]	177 [7.0]	1056 [41.55]	1197.6 [47.1]	28 [1.1]	226 [8.9]	792 [31.2]	380 [15.0]	1746 [68.7]	—	2377 [93.6]	1880 [74.0]	352 [13.9]	234 [9.2]	676 [26.6]	242 [9.5]
Super Duty F-450 Regular Cab 4x4	4795 [188.8]	15,000 DRW	225/70R19.5F	663 [26.1]	609 [24.0]	701 [27.6]	610 [24.0]	697 [27.4]	583 [23.0]	2033 [80.0]	1977 [77.8]	125 [4.9]	111 [4.37]	177 [7.0]	1056 [41.55]	1197.6 [47.1]	28 [1.1]	226 [8.9]	792 [31.2]	380 [15.0]	1746 [68.7]	—	2377 [93.6]	1880 [74.0]	352 [13.9]	234 [9.2]	676 [26.6]	242 [9.5]
Super Duty F-450 Regular Cab 4x4	5100(4) [200.8]	15,000 DRW	225/70R19.5F	656 [25.8]	609 [24.0]	700 [27.6]	610 [24.0]	696 [27.4]	585 [23.0]	2033 [80.0]	1977 [77.8]	125 [4.9]	111 [4.37]	177 [7.0]	1056 [41.55]	1197.6 [47.1]	28 [1.1]	226 [8.9]	792 [31.2]	380 [15.0]	1746 [68.7]	—	2377 [93.6]	1880 [74.0]	352 [13.9]	234 [9.2]	676 [26.6]	242 [9.5]
Super Duty F-550 Regular Cab 4x2	3576 [140.8]	17,500 DRW	225/70R19.5F	673 [26.5]	609 [24.0]	700 [27.6]	610 [24.0]	695 [27.3]	575 [22.6]	2076 [81.7]	1977 [77.8]	125 [4.9]	143.5 [5.65]	177 [7.0]	1056 [41.55]	1197.6 [47.1]	25 [1.0]	226 [8.9]	792 [31.2]	380 [15.0]	1746 [68.7]	—	2377 [93.6]	1880 [74.0]	352 [13.9]	234 [9.2]	676 [26.6]	242 [9.5]
Super Duty F-550 Regular Cab 4x2	4186 [164.8]	17,500 DRW 19,000 DRW	225/70R19.5F	670 [26.4]	609 [24.0]	700 [27.6]	610 [24.0]	695 [27.3]	579 [22.8]	2068 [81.4]	1977 [77.8]	125 [4.9]	143.5 [5.65]	177 [7.0]	1056 [41.55]	1197.6 [47.1]	25 [1.0]	226 [8.9]	792 [31.2]	380 [15.0]	1746 [68.7]	—	2377 [93.6]	1880 [74.0]	352 [13.9]	234 [9.2]	676 [26.6]	242 [9.5]
Super Duty F-550 Regular Cab 4x2	4795 [188.8]	17,500 DRW	225/70R19.5F	670 [26.4]	609 [24.0]	700 [27.6]	610 [24.0]	694 [27.3]	581 [22.9]	2068 [81.4]	1977 [77.8]	125 [4.9]	143.5 [5.65]	177 [7.0]	1056 [41.55]	1197.6 [47.1]	25 [1.0]	226 [8.9]	792 [31.2]	380 [15.0]	1746 [68.7]	—	2377 [93.6]	1880 [74.0]	352 [13.9]	234 [9.2]	676 [26.6]	242 [9.5]
Super Duty F-550 Regular Cab 4x2	5100(4) [200.8]	17,500 DRW 19,000 DRW	225/70R19.5F	664 [24.2] 671 [26.4]	609 [24.0] 609 [24.0]	699 [27.5] 698 [27.5]	610 [24.0] 610 [24.0]	694 [27.3] 691 [27.2]	583 [23.0] 582 [22.9]	2059 [81.1]	1977 [77.8]	125 [4.9]	143.5 [5.65]	177 [7.0]	1056 [41.55]	1197.6 [47.1]	25 [1.0]	226 [8.9]	792 [31.2]	380 [15.0]	1746 [68.7]	—	2377 [93.6]	1880 [74.0]	352 [13.9]	234 [9.2]	676 [26.6]	242 [9.5]
Super Duty F-550 Regular Cab 4x4	3576 [140.8]	17,500 DRW	225/70R19.5F	609 [24.0]	609 [24.0]	699 [27.5]	610 [24.0]	697 [27.4]	581 [22.9]	2075 [81.7]	1977 [77.8]	125 [4.9]	143.5 [5.65]	177 [7.0]	1056 [41.55]	1197.6 [47.1]	25 [1.0]	226 [8.9]	792 [31.2]	380 [15.0]	1746 [68.7]	—	2377 [93.6]	1880 [74.0]	352 [13.9]	234 [9.2]	676 [26.6]	242 [9.5]
Super Duty F-550 Regular Cab 4x4	4186 [164.8]	17,500 DRW	225/70R19.5F	661 [26.0]	609 [24.0]	699 [27.5]	610 [24.0]	697 [27.4]	581 [22.9]	2063 [81.2]	1977 [77.8]	125 [4.9]	143.5 [5.65]	177 [7.0]	1056 [41.55]	1197.6 [47.1]	25 [1.0]	226 [8.9]	792 [31.2]	380 [15.0]	1746 [68.7]	—	2377 [93.6]	1880 [74.0]	352 [13.9]	234 [9.2]	676 [26.6]	242 [9.5]
Super Duty F-550 Regular Cab 4x4	4795 [188.8]	17,500 DRW	225/70R19.5F	661 [26.0]	609 [24.0]	699 [27.5]	610 [24.0]	695 [27.3]	583 [23.0]	2059 [81.1]	1977 [77.8]	125 [4.9]	143.5 [5.65]	177 [7.0]	1056 [41.55]	1197.6 [47.1]	25 [1.0]	226 [8.9]	792 [31.2]	380 [15.0]	1746 [68.7]	—	2377 [93.6]	1880 [74.0]	352 [13.9]	234 [9.2]	676 [26.6]	242 [9.5]
Super Duty F-550 Regular Cab 4x4	5100(4) [200.8]	17,500 DRW	225/70R19.5F	655 [25.8]	609 [24.0]	699 [27.5]	610 [24.0]	695 [27.3]	586 [23.1]	2049 [80.7]	1977 [77.8]	125 [4.9]	143.5 [5.65]	177 [7.0]	1056 [41.55]	1197.6 [47.1]	25 [1.0]	226 [8.9]	792 [31.2]	380 [15.0]	1746 [68.7]	—	2377 [93.6]	1880 [74.0]	352 [13.9]	234 [9.2]	676 [26.6]	242 [9.5]

(1) — The Height Data shown represents dimensions of a base/standard vehicle with no options. Actual height may vary due to production tolerances (completed vehicles only).
(2) — Height at base curb weight with standard spring
(3) — Loaded height at spring rating with standard spring
(4) — Reinforced frame available on 200.8" wheelbase, Regular Cab, 450/550
(5) — LH + H508 [4.9] = height to top of frame
(6) — 9700 lb California (gas engine)
(7) — 11,000 lb California (gas engine)
(8) — 12,500 lb all states (diesel engine)

† — For dimensions, see Page 159 of this section.
*H — Top of frame at ℄ of rear axle to top of tire in jounce
*L — From outside edge of shackle eyebolt
*W — From frame to top of tire in jounce

NOTES — [ ] DIMENSIONS ARE INCHES.
— **F, R**, AND **LH** VEHICLE HEIGHT DIMENSIONS ARE FROM GROUND TO DATUM LINE.

AXLE/TIRE/VEHICLE HEIGHT DATA
SUPER DUTY F-350/450/550 SUPER CHASSIS CAB

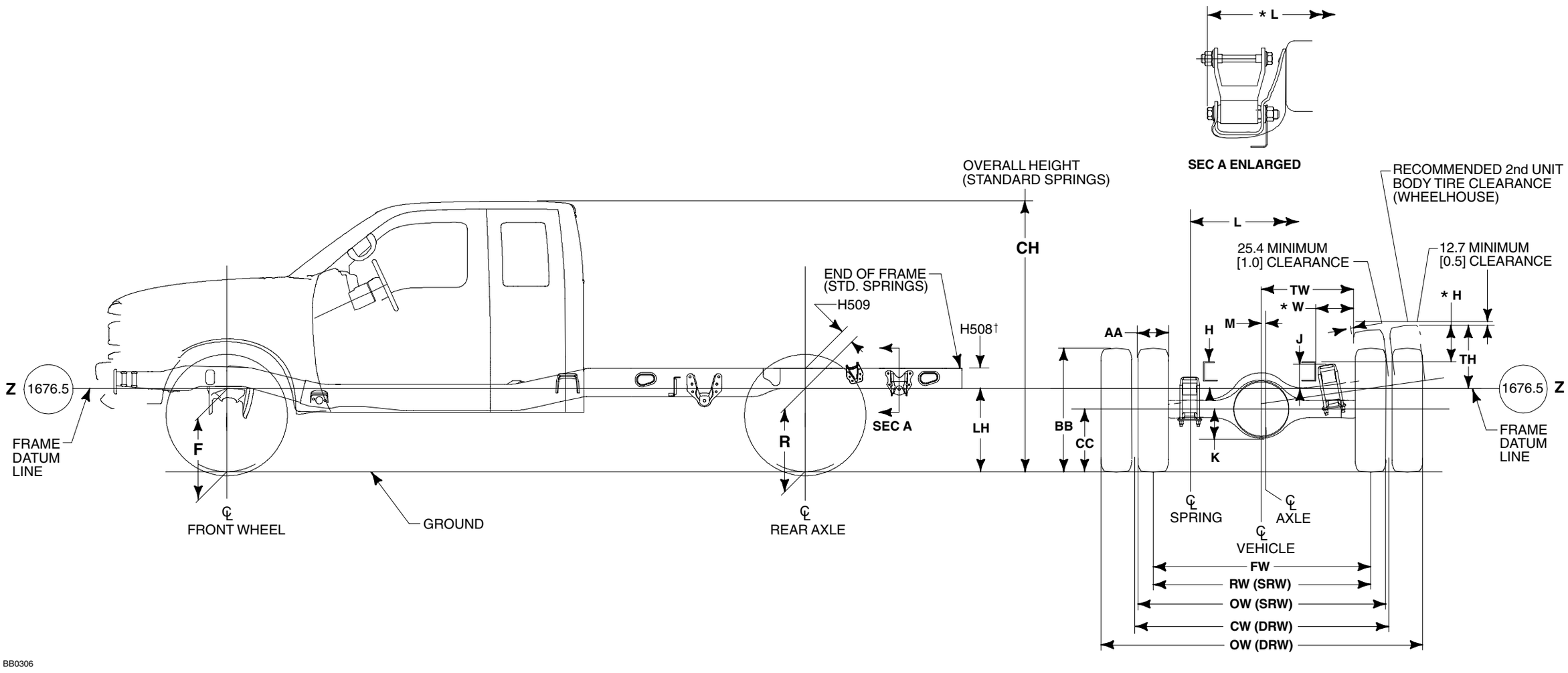

NOTES — [ ] DIMENSIONS ARE INCHES.

— **F** AND **R** VEHICLE HEIGHT DIMENSIONS ARE FROM GROUND TO FRAME DATUM LINE; **LH** IS FROM GROUND TO TOP OF FLOOR RIBS.

— ***H** IS TOP OF FRAME AT ℄ OF REAR AXLE TO TOP OF TIRE IN JOUNCE

— ***L** IS FROM OUTSIDE EDGE OF SHACKLE EYEBOLT

— ***W** IS FROM FRAME TO TOP OF TIRE IN JOUNCE

— † FOR DIMENSIONS, SEE PAGE 161 OF THIS SECTION

AXLE/TIRE/VEHICLE HEIGHT DATA
SUPER DUTY F-350/450/550
SUPER CHASSIS CAB

2003
MODEL YEAR

MODEL	WB	GVWR	BASE TIRE	F HEIGHT AT FRONT WHEEL(1)		R HEIGHT AT REAR AXLE(1)		LH(1)(4)		CH(1)		H	J	K	L	*L	M	AA	BB	CC	FW	RW	OW	CW	TH	*H	TW	*W
				CURB(2)	LOADED(3)	CURB(2)	LOADED(3)	EMPTY	LOADED	EMPTY	LOADED																	
Super Duty F-350 4x2 SuperCab	4110 [161.8]	9900(5)	LT265/75R16E	532 [21.0]	515 [20.3]	646 [25.4]	547 [21.6]	665 [26.2]	538 [21.2]	1928 [75.9]	1877 [73.9]	124.0 [4.88]	172.5 [6.7]	165 [6.5]	1056 [41.55]	1184.0 [46.6]	45 [1.8]	278 [10.9]	781 [30.7]	371 [14.6]	1746 [68.7]	1729 [68.1]	2007 [79.0]	—	394 [15.5]	276 [10.9]	704 [27.7]	271 [10.7]
		11,200(6)(7) DRW	LT235/85R16E	520 [20.5]	504 [19.9]	642 [25.3]	537 [21.2]	681 [26.8]	543 [21.4]	1930 [76.0]	1877 [73.9]	124.0 [4.88]	176.5 [6.9]	177 [7.0]	1056 [41.55]	1184.0 [46.6]	45 [1.8]	259 [10.2]	792 [31.1]	375 [14.8]	1746 [68.7]	—	2304 @ [90.7]	1803 @ [71.0]	376 [14.8]	258 [10.2]	626 [24.6]	193 [7.6]
Super Duty F-350 4x2 SuperCab	4110 [161.8]	9900(5)	LT265/75R16E	623 [24.5]	604 [23.8]	702 [27.6]	604 [23.8]	711 [28.0]	585 [23.0]	2029 [79.9]	1969 [77.5]	124.0 [4.88]	172.5 [6.7]	165 [6.5]	1056 [41.55]	1184.0 [46.6]	45 [1.8]	278 [10.9]	781 [30.7]	371 [14.6]	1746 [68.7]	1729 [68.1]	2007 [79.0]	—	394 [15.5]	276 [10.9]	704 [27.7]	271 [10.7]
		11,200(6)(7) DRW	LT235/85R16E	610 [24.0]	593 [23.4]	701 [27.6]	594 [23.4]	715 [28.1]	576 [22.7]	2019 [79.5]	1953 [76.9]	124.0 [4.88]	176.5 [6.9]	177 [7.0]	1056 [41.55]	1184.0 [46.6]	45 [1.8]	259 [10.2]	792 [31.1]	375 [14.8]	1746 [68.7]	—	2329 @ [91.7]	1803 @ [71.0]	342 [13.5]	224 [8.8]	624 [24.6]	191 [7.5]
Super Duty F-450 4x2 SuperCab	4110 [161.8]	15,000 DRW	225/70R19.5	674 [26.5]	610 [24.0]	701 [27.6]	610 [24.0]	696 [27.4]	577 [22.7]	2045 [80.5]	1977 [77.8]	125.0 [4.92]	111.0 [4.3]	177 [7.0]	1056 [41.55]	1197.6 [47.1]	28 [1.1]	226 [8.8]	792 [31.1]	381 [15.0]	1746 [68.7]	—	2377 [93.6]	1880 [74.0]	352 [13.8]	234 [9.2]	676 [26.6]	242 [9.5]
Super Duty F-450 4x4 SuperCab	4110 [161.8]	15,000 DRW	225/70R19.5	674 [26.5]	610 [24.0]	701 [27.6]	610 [24.0]	696 [27.4]	577 [22.7]	2045 [80.5]	1977 [77.8]	125.0 [4.92]	111.0 [4.3]	177 [7.0]	1056 [41.55]	1197.6 [47.1]	28 [1.1]	226 [8.8]	792 [31.1]	381 [15.0]	1746 [68.7]	—	2377 [93.6]	1880 [74.0]	352 [13.8]	234 [9.2]	676 [26.6]	242 [9.5]
Super Duty F-550 4x2 SuperCab	4110 [161.8]	17,500 DRW	225/70R19.5	674 [26.5]	610 [24.0]	701 [27.6]	610 [24.0]	696 [27.4]	577 [22.7]	2070 [81.5]	1977 [77.8]	125.0 [4.92]	143.5 [5.6]	177 [7.0]	1056 [41.55]	1197.6 [47.1]	25 [1.1]	226 [8.8]	792 [31.1]	381 [15.0]	1746 [68.7]	—	2377 [93.6]	1880 [74.0]	352 [13.8]	234 [9.2]	676 [26.6]	242 [9.5]
Super Duty F-550 4x4 SuperCab	4110 [161.8]	17,500 DRW	225/70R19.5	667 [26.2]	610 [24.0]	701 [27.6]	610 [24.0]	696 [27.4]	580 [22.8]	2066 [81.3]	1977 [77.8]	125.0 [4.92]	143.5 [5.6]	177 [7.0]	1056 [41.55]	1197.6 [47.1]	25 [1.1]	226 [8.8]	792 [31.1]	381 [15.0]	1746 [68.7]	—	2377 [93.6]	1880 [74.0]	352 [13.8]	234 [9.2]	676 [26.6]	242 [9.5]

(1) — The Height Data shown represents dimensions of a base/standard vehicle with no options. Actual height may vary due to production tolerances (completed vehicles only).
(2) — Height at base curb weight with standard spring
(3) — Loaded height at spring rating with standard spring
(4) — LH + H508 [4.9] = height to top of frame
(5) — 9700 lb California (gas engine)
(6) — 11,000 lb California (gas engine)
(7) — 12,500 lb all states (diesel engine)

*H — Top of frame at ℄ of rear axle to top of tire in jounce
*L — From outside edge of shackle eyebolt
*W — From frame to top of tire in jounce

@ — CW = 1880 [74] and OW = 2380 [93.7] for 4x2,
CW = 1880 [74] and OW = 2405 [94.7] for 4x4
with Ambulance Prep Package (Wide Track Axle). Standard Axle with Ambulance requires ordering "Wide Track Delete" option

NOTES — [ ] DIMENSIONS ARE INCHES.
— **F, R**, AND **LH** VEHICLE HEIGHT DIMENSIONS ARE FROM GROUND TO DATUM LINE.

AXLE/TIRE/VEHICLE HEIGHT DATA
SUPER DUTY F-350/450/550 CREW CHASSIS CAB

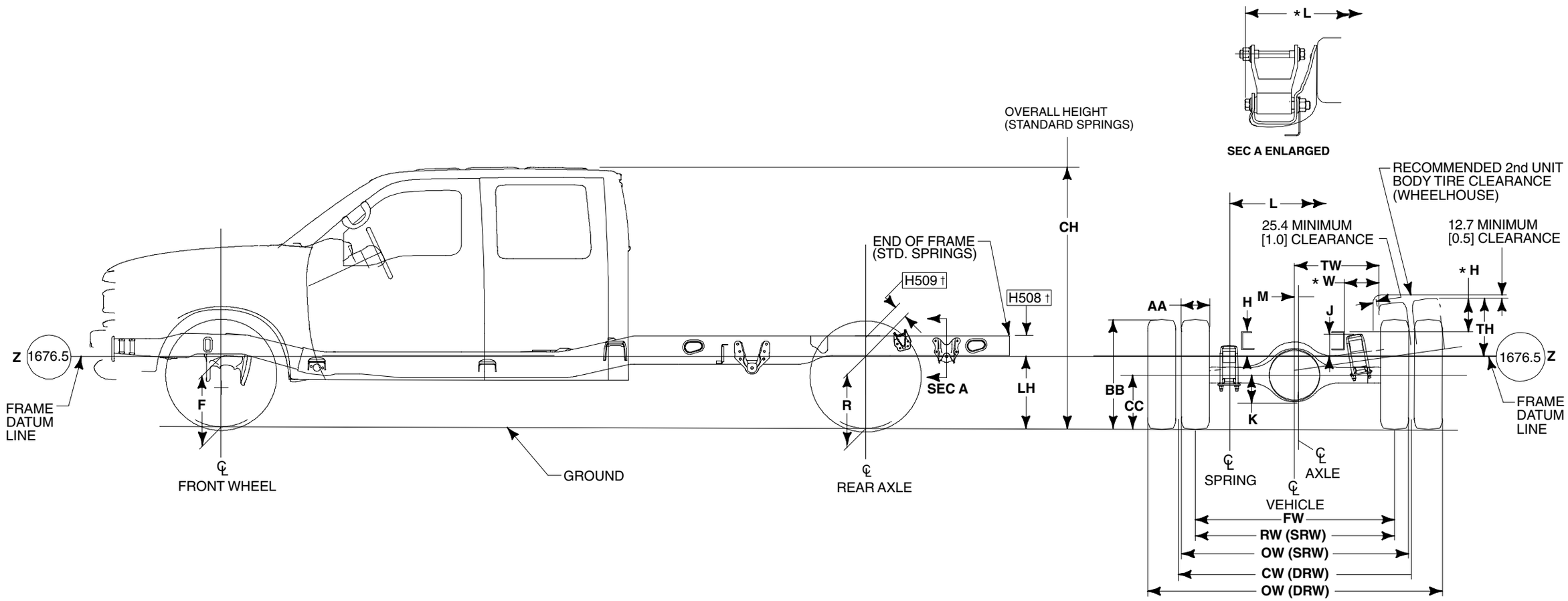

BB0307

NOTES — [ ] DIMENSIONS ARE INCHES.

— **F** AND **R** VEHICLE HEIGHT DIMENSIONS ARE FROM GROUND TO FRAME DATUM LINE; **LH** IS FROM GROUND TO TOP OF FLOOR RIBS.

— ***H** IS TOP OF FRAME AT ℄ OF REAR AXLE TO TOP OF TIRE IN JOUNCE

— ***L** IS FROM OUTSIDE EDGE OF SHACKLE EYEBOLT

— ***W** IS FROM FRAME TO TOP OF TIRE IN JOUNCE

— † FOR DIMENSIONS, SEE PAGE 163 OF THIS SECTION

AXLE/TIRE/VEHICLE HEIGHT DATA
SUPER DUTY F-350/450/550
CREW CHASSIS CAB

2003
MODEL YEAR

MODEL	WB	GVWR	BASE TIRE	F HEIGHT AT FRONT WHEEL(1)		R HEIGHT AT REAR AXLE(1)		LH(1)(4)		CH(1)		H	J	K	L	*L	M	AA	BB	CC	FW	RW	OW	CW	TH	*H	TW	*W
				CURB(2)	LOADED(3)	CURB(2)	LOADED(3)	EMPTY	LOADED	EMPTY	LOADED																	
Super Duty F-350 Crew Cab 4x2	4475 [176.2]	9900(5)	LT265/75R16E	535 [21.1]	515 [20.3]	644 [25.3]	547 [21.6]	659 [26.0]	537 [21.1]	1929 [75.9]	1880 [74.0]	124.0 [4.88]	172.5 [6.7]	165 [6.5]	1056 [41.55]	1184.0 [46.6]	45 [1.8]	278 [10.9]	781 [30.7]	371 [14.6]	1746 [68.7]	1729 [68.1]	2007 [79.0]	—	394 [15.5]	276 [10.9]	704 [27.7]	271 [10.7]
		11,200(6)(7) DRW	LT235/85R16E	526 [20.7]	504 [19.9]	641 [25.2]	537 [21.2]	673 [26.5]	541 [21.3]	1940 [76.4]	1879 [74.0]	124.0 [4.88]	176.5 [6.9]	177 [7.0]	1056 [41.55]	1184.0 [46.6]	45 [1.8]	259 [10.2]	792 [31.1]	375 [14.8]	1746 [68.7]	—	2304 [90.7]	1803 [71.0]	376 [14.8]	258 [10.2]	626 [24.6]	193 [7.6]
Super Duty F-350 Crew Cab 4x4	4475 [176.2]	9900(5)	LT265/75R16E	630 [24.8]	604 [23.8]	699 [27.5]	604 [23.8]	704 [27.7]	584 [23.0]	2026 [79.8]	1974 [77.7]	124.0 [4.88]	172.5 [6.7]	165 [6.5]	1056 [41.55]	1184.0 [46.6]	45 [1.8]	278 [10.9]	781 [30.7]	371 [14.6]	1746 [68.7]	1729 [68.1]	2007 [79.0]	—	394 [15.5]	276 [10.9]	704 [27.7]	271 [10.7]
		11,200(6)(7) DRW	LT235/85R16E	628 [24.7]	593 [23.4]	699 [27.5]	594 [23.4]	705 [27.8]	571 [22.5]	2038 [80.2]	1978 [77.9]	124.0 [4.88]	176.5 [6.9]	177 [7.0]	1056 [41.55]	1184.0 [46.6]	45 [1.8]	259 [10.2]	792 [31.1]	375 [14.8]	1746 [68.7]	—	2329 [91.7]	1803 [71.0]	342 [13.5]	224 [8.8]	624 [24.6]	191 [7.5]
Super Duty F-450 Crew Cab 4x2	4475 [176.2]	15,000 DRW	225/70R19.5F	665 [26.2]	609 [24.0]	697 [27.5]	610 [24.0]	692 [27.3]	581 [22.9]	2053 [80.8]	1980 [78.0]	125.0 [4.92]	111.0 [4.3]	177 [7.0]	1056 [41.55]	1197.6 [47.1]	28 [1.1]	226 [8.8]	792 [31.1]	381 [15.0]	1746 [68.7]	—	2377 [93.6]	1880 [74.0]	352 [13.8]	234 [9.2]	676 [26.6]	242 [9.5]
Super Duty F-450 Crew Cab 4x2	5085 [200.2]	15,000 DRW	225/70R19.5F	665 [26.2]	609 [24.0]	697 [27.5]	610 [24.0]	691 [27.2]	583 [22.9]	2053 [80.8]	1980 [78.0]	125.0 [4.92]	111.0 [4.3]	177 [7.0]	1056 [41.55]	1197.6 [47.1]	28 [1.1]	226 [8.8]	792 [31.1]	381 [15.0]	1746 [68.7]	—	2377 [93.6]	1880 [74.0]	352 [13.8]	234 [9.2]	676 [26.6]	242 [9.5]
Super Duty F-450 Crew Cab 4x4	4475 [176.2]	15,000 DRW	225/70R19.5F	656 [25.8]	609 [24.0]	697 [27.5]	610 [24.0]	695 [27.4]	584 [23.0]	2056 [80.9]	1980 [78.0]	125.0 [4.92]	111.0 [4.3]	177 [7.0]	1056 [41.55]	1197.6 [47.1]	28 [1.1]	226 [8.8]	792 [31.1]	381 [15.0]	1746 [68.7]	—	2377 [93.6]	1880 [74.0]	352 [13.8]	234 [9.2]	676 [26.6]	242 [9.5]
Super Duty F-450 Crew Cab 4x4	5085 [200.2]	15,000 DRW	225/70R19.5F	656 [25.8]	609 [24.0]	697 [27.5]	610 [24.0]	693 [27.3]	585 [23.0]	2056 [80.9]	1980 [78.0]	125.0 [4.92]	111.0 [4.3]	177 [7.0]	1056 [41.55]	1197.6 [47.1]	28 [1.1]	226 [8.8]	792 [31.1]	381 [15.0]	1746 [68.7]	—	2377 [93.6]	1880 [74.0]	352 [13.8]	234 [9.2]	676 [26.6]	242 [9.5]
Super Duty F-550 Crew Cab 4x2	4475 [176.2]	17,500 DRW	225/70R19.5F	663 [26.1]	609 [24.0]	698 [27.5]	610 [24.0]	693 [27.3]	582 [22.9]	2067 [81.4]	1980 [78.0]	125.0 [4.92]	143.5 [5.6]	177 [7.0]	1056 [41.55]	1197.6 [47.1]	25 [1.1]	226 [8.8]	792 [31.1]	381 [15.0]	1746 [68.7]	—	2377 [93.6]	1880 [74.0]	352 [13.8]	234 [9.2]	676 [26.6]	242 [9.5]
Super Duty F-550 Crew Cab 4x2	5085 [200.2]	17,500 DRW	225/70R19.5F	663 [26.1]	609 [24.0]	698 [27.5]	610 [24.0]	692 [27.3]	584 [23.0]	2067 [81.4]	1980 [78.0]	125.0 [4.92]	143.5 [5.6]	177 [7.0]	1056 [41.55]	1197.6 [47.1]	25 [1.1]	226 [8.8]	792 [31.1]	381 [15.0]	1746 [68.7]	—	2377 [93.6]	1880 [74.0]	352 [13.8]	234 [9.2]	676 [26.6]	242 [9.5]
Super Duty F-550 Crew Cab 4x4	4475 [176.2]	17,500 DRW	225/70R19.5F	655 [25.8]	609 [24.0]	697 [27.5]	610 [24.0]	695 [27.4]	584 [23.0]	2066 [81.3]	1980 [78.0]	125.0 [4.92]	143.5 [5.6]	44 [1.7]	1056 [41.55]	1197.6 [47.1]	25 [1.1]	226 [8.8]	792 [31.1]	381 [15.0]	1746 [68.7]	—	2377 [93.6]	1880 [74.0]	352 [13.8]	234 [9.2]	676 [26.6]	242 [9.5]
Super Duty F-550 Crew Cab 4x4	5085 [200.2]	17,500 DRW	225/70R19.5F	655 [25.8]	609 [24.0]	697 [27.5]	610 [24.0]	693 [27.3]	586 [23.0]	2066 [81.3]	1980 [78.0]	125.0 [4.92]	143.5 [5.6]	44 [1.7]	1056 [41.55]	1197.6 [47.1]	25 [1.1]	226 [8.8]	792 [31.1]	381 [15.0]	1746 [68.7]	—	2377 [93.6]	1880 [74.0]	352 [13.8]	234 [9.2]	676 [26.6]	242 [9.5]

(1) – The Height Data shown represents dimensions of a base/standard vehicle with no options. Actual height may vary due to production tolerances (completed vehicles only).

(2) – Height at base curb weight with standard spring

(3) – Loaded height at spring rating with standard spring

(4) – LH + H508 [4.9] = height to top of frame

(5) – 9700 lb California (gas engine)

(6) – 11,000 lb California (gas engine)

(7) – 12,500 lb all states (diesel engine)

*H – Top of frame at ℄ of rear axle to top of tire in jounce

*L – From outside edge of shackle eyebolt

*W – From frame to top of tire in jounce

NOTES – [ ] DIMENSIONS ARE INCHES.
— **F, R**, AND **LH** VEHICLE HEIGHT DIMENSIONS ARE FROM GROUND TO DATUM LINE.

SUPER DUTY F-SERIES GROUND CLEARANCE DATA

2003
MODEL YEAR

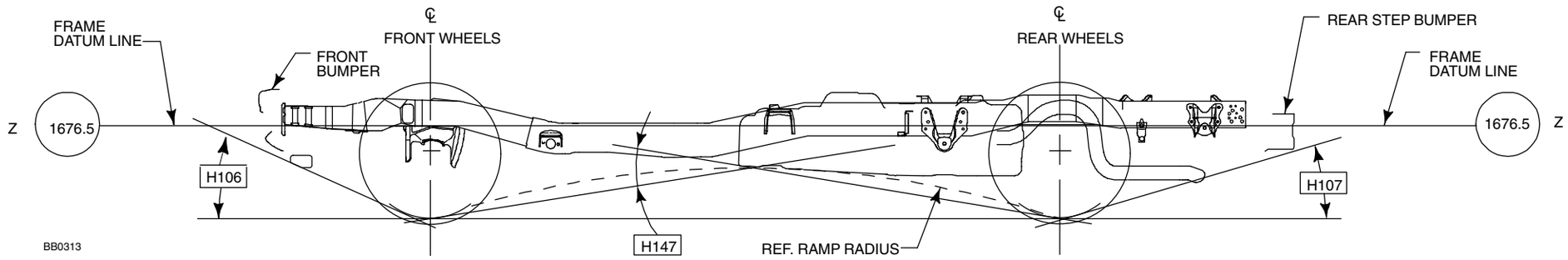

TIRE	MODEL	WHEELBASE	GVWR [LB]	H106 APPROACH ANGLE	H147 RAMP BREAKOVER	H107 DEPARTURE ANGLE					
						SPARE TIRE	REAR BUMPER	TRAILER HITCH	EXHAUST TAILPIPE	FRAME RAIL	AFT-AXLE FUEL TANK
LT235/85R16E	SD F-250 REGULAR CAB 4X2 SRW	3480 [137.0]	8800	20.8°	16.0°	13.3°	16.6°	11.2°	14.7°	—	✳✳✳
	SD F-250 REGULAR CAB 4X4 SRW	3480 [137.0]	8800	27.7°	22.2°	15.5°	21.6°	15.9°	23.2°	—	✳✳✳
	SD F-350 REGULAR CAB 4X4 DRW	3480 [137.0]	11,200(1)	27.7°	22.2°	15.6°	21.6°	15.9°	23.2°	—	✳✳✳
	SD F-250 SUPERCAB 4X2 SRW	3602 [141.8]	8800	20.8°	15.8°	13.3°	16.6°	11.2°	14.7°	—	✳✳✳
	SD F-250 SUPERCAB 4X2 SRW	4014 [158.0]	8800	20.8°	11.9°	13.3°	16.6°	11.2°	14.7°	—	✳✳✳
	SD F-250 SUPERCAB 4X4 SRW	3602 [141.8]	8800	20.8°	21.7°	15.5°	21.6°	15.9°	23.2°	—	✳✳✳
	SD F-250 SUPERCAB 4X4 SRW	4014 [158.0]	8800	20.8°	19.7°	15.6°	21.6°	15.9°	23.2°	—	✳✳✳
	SD F-350 SUPERCAB 4X4 DRW	4014 [158.0]	11,200(1)	20.8°	19.6°	19.9°	21.6°	15.9°	23.2°	—	✳✳✳
	SD F-250 CREW CAB 4X2 SRW	3967 [156.2]	8800	20.8°	14.5°	13.9°	16.6°	11.2°	14.7°	—	✳✳✳
	SD F-250 CREW CAB 4X2 SRW	4379 [172.4]	8800	20.8°	13.4°	13.9°	16.6°	11.2°	14.7°	—	✳✳✳
	SD F-250 CREW CAB 4X4 SRW	3967 [156.2]	8800	27.6°	19.7°	19.9°	21.6°	15.9°	23.2°	—	✳✳✳
	SD F-250 CREW CAB 4X4 SRW	4379 [172.4]	8800	27.6°	18.6°	13.3°	21.6°	15.9°	23.2°	—	✳✳✳
	SD F-350 CREW CAB 4X4 DRW	3967 [156.2]	11,200(1)	27.6°	19.7°	15.7°	21.6°	15.9°	23.2°	—	✳✳✳
	SD F-350 CREW CAB 4X4 DRW	4379 [172.4]	11,200(1)	27.6°	18.5°	15.8°	21.6°	15.9°	23.2°	—	✳✳✳
	SD F-350 REGULAR CHASSIS CAB 4X4 DRW	3576 [140.8]	11,200(1)	28.7°	26.2°	✳	✳✳	✳✳	31.1°	28.1°	28.8°
	SD F-350 REGULAR CHASSIS CAB 4X4 DRW	4186 [164.8]	11,200(1)	28.7°	20.6°	✳	✳✳	✳✳	31.1°	28.1°	28.8°
	SD F-350 SUPER CHASSIS CAB 4X4 DRW	4110 [161.8]	11,200(1)	28.7°	23.6°	✳	✳✳	✳✳	31.1°	28.1°	28.8°
	SD F-350 CREW CHASSIS CAB 4X4 DRW	4475 [176.2]	11,200(1)	28.7°	22.9°	✳	✳✳	✳✳	31.1°	28.1°	28.8°

(1) —11,000 lb California

NOTES — [ ] DIMENSIONS ARE INCHES.

✳ — SPARE TIRE NOT MOUNTED UNDER THE CHASSIS.

✳ ✳ — NOT AVAILABLE ON CHASSIS CAB

✳ ✳ ✳ — NOT AVAILABLE ON PICKUPS

SUPER DUTY F-SERIES GROUND CLEARANCE DATA

2003
MODEL YEAR

TIRE	MODEL	WHEELBASE	GVWR [LB]	H106 APPROACH ANGLE	H147 RAMP BREAKOVER	H107 DEPRTURE ANGLE					
						SPARE TIRE	REAR BUMPER	TRAILER HITCH	EXHAUST TAILPIPE	FRAME RAIL	AFT-AXLE FUEL TANK
LT235/85R16E	SD F-350 REGULAR CAB 4x2 DRW	3480 [137.0]	11,200(1)	20.8°	14.7°	13.0°	15.9°	10.5°	13.5°	—	***
	SD F-350 SUPERCAB 4x2 DRW	4014 [158.0]	11,200(1)	20.8°	13.3°	13.0°	15.9°	10.5°	13.5°	—	***
	SD F-350 CREW CAB 4x2 DRW	3967 [156.2]	11,200(1)	20.8°	13.4°	13.0°	15.9°	10.5°	13.5°	—	***
		4379 [172.4]	11,200(1)	20.8°	12.6°	13.0°	15.9°	10.5°	13.5°	—	***
	SD F-350 REGULAR CHASSIS CAB 4x2 DRW	3596 [140.8]	11,200(1)	21.4°	21.0°	*	**	**	24.7°	25.1°	25.1°
		4186 [164.8]	11,200(1)	21.4°	18.7°	*	**	**	24.7°	25.1°	25.1°
	SD F-350 SUPER CHASSIS CAB 4x2 DRW	4110 [161.8]	11,200(1)	21.4°	20.6°	*	**	**	24.7°	25.1°	25.1°
	SD F-350 CREW CHASSIS CAB 4x2 DRW	4475 [176.2]	11,200(1)	21.4°	18.0°	*	**	**	24.7°	25.1°	25.1°
LT265/75R16E	SD F-350 REGULAR CAB 4x2 DRW	3480 [137.0]	9900(2)	20.8°	15.0°	13.6°	16.3°	11.0°	14.3°	—	***
	SD F-350 REGULAR CAB 4x4 SRW	3480 [137.0]	9900(2)	27.7°	21.4°	19.7°	21.3°	15.7°	22.8°	—	***
	SD F-350 SUPERCAB 4x2 SRW	3602 [141.8]	9900(2)	20.8°	15.0°	13.6°	16.3°	11.0°	14.3°	—	***
		4014 [158.0]	9900(2)	20.8°	13.8°	13.6°	16.3°	11.0°	14.3°	—	***
	SD F-350 SUPERCAB 4x4 SRW	3602 [141.8]	9900(2)	27.7°	20.8°	19.7°	21.3°	15.7°	22.8°	—	***
		4014 [158.0]	9900(2)	27.7°	19.3°	19.7°	21.3°	15.7°	22.8°	—	***
	SD F-350 CREW CAB 4x2 SRW	3967 [156.2]	9900(2)	20.8°	14.0°	13.6°	16.3°	11.0°	14.3°	—	***
		4379 [172.4]	9900(2)	20.8°	13.1°	13.6°	16.3°	11.0°	14.3°	—	***
	SD F-350 CREW CAB 4x4 SRW	3967 [156.2]	9900(2)	27.6°	12.1°	13.1°	21.3°	15.7°	22.8°	—	***
		4379 [172.4]	9900(2)	27.6°	11.4°	13.1°	21.3°	15.7°	22.8°	—	***
	SD F-350 REGULAR CHASSIS CAB 4x2 SRW	3576 [140.8]	9900(2)	20.8°	21.7°	*	**	**	25.7°	25.6°	20.2°
	SD F-350 REGULAR CHASSIS CAB 4x4 SRW	3576 [140.8]	9900(2)	27.7°	25.9°	*	**	**	30.7°	27.9°	28.5°
	SD F-350 SUPER CHASSIS CAB 4x2 SRW	4110 [161.8]	9900(2)	20.8°	19.5°	*	**	**	25.7°	25.6°	25.8°
	SD F-350 SUPER CHASSIS CAB 4x4 SRW	4110 [161.8]	9900(2)	27.7°	23.3°	*	**	**	30.7°	27.9°	28.5°
	SD F-350 CREW CHASSIS CAB 4x2 SRW	4475 [176.2]	9900(2)	20.8°	18.5°	*	**	**	25.7°	25.6°	25.8°
	SD F-350 CREW CHASSIS CAB 4x4 SRW	4475 [176.2]	9900(2)	27.6°	22.1°	*	**	**	30.7°	27.9°	28.5°

(1) –11,000 lb California.
(2) –9700 lb California

NOTES –[ ] DIMENSIONS ARE INCHES
* –SPARE TIRE NOT MOUNTED UNDER THE CHASSIS.
** –NOT AVAILABLE ON CHASSIS CAB
*** –NOT AVAILABLE ON PICKUPS.

SUPER DUTY F-SERIES GROUND CLEARANCE DATA

2003
MODEL YEAR

TIRE	MODEL	WHEELBASE	GVWR [LB]	H106 APPROACH ANGLE	H147 RAMP BREAKOVER	H107 DEPARTURE ANGLE					
						SPARE TIRE	REAR BUMPER	TRAILER HITCH	EXHAUST TAILPIPE	FRAME RAIL	AFT-AXLE FUEL TANK
	SD F-450 REGULAR CHASSIS CAB 4X2 DRW	3576 [140.8]	15,000	28.4°	26.5°	*	**	**	30.0°	27.5°	28.1°
	SD F-450 REGULAR CHASSIS CAB 4X2 DRW	4186 [164.8]	15,000	28.4°	23.4°	*	**	**	30.0°	27.5°	28.1°
	SD F-450 REGULAR CHASSIS CAB 4X2 DRW	4795 [188.8]	15,000	28.4°	23.4°	*	**	**	30.0°	27.5°	28.1°
	SD F-450 REGULAR CHASSIS CAB 4X2 DRW	5100 [200.8]	15,000	28.4°	20.8°	*	**	**	30.0°	27.5°	28.1°
	SD F-450 REGULAR CHASSIS CAB 4X2 DRW	3575 [140.8]	15,000	28.4°	26.5°	*	**	**	30.0°	27.5°	28.1°
	SD F-450 REGULAR CHASSIS CAB 4X4 DRW	4186 [164.8]	15,000	28.4°	23.4°	*	**	**	30.0°	27.5°	28.1°
	SD F-450 REGULAR CHASSIS CAB 4X4 DRW	4795 [188.8]	15,000	28.4°	23.4°	*	**	**	30.0°	27.5°	28.1°
	SD F-450 REGULAR CHASSIS CAB 4X4 DRW	5100 [200.8]	15,000	28.4°	20.8°	*	**	**	30.0°	27.5°	28.1°
	SD F-450 SUPER CHASSIS CAB 4X2 DRW	4110 [161.8]	15,000	28.4°	24.1°	*	**	**	30.0°	27.5°	28.1°
	SD F-450 SUPER CHASSIS CAB 4X4 DRW	4110 [161.8]	15,000	28.4°	24.1°	*	**	**	30.0°	27.5°	28.1°
	SD F-450 CREW CHASSIS CAB 4X2	4475 [176.2]	15,000	28.4°	22.4°	*	**	**	30.0°	27.5°	28.1°
	SD F-450 CREW CHASSIS CAB 4X2	5085 [200.2]	15,000	28.4°	22.4°	*	**	**	30.0°	27.5°	28.1°
	SD F-450 CREW CHASSIS CAB 4X4	4475 [176.2]	15,000	28.4°	22.4°	*	**	**	30.0°	27.5°	28.1°
	SD F-450 CREW CHASSIS CAB 4X4	5085 [200.2]	15,000	28.4°	22.4°	*	**	**	30.0°	27.5°	28.1°
225/70R19.5F	SD F-550 REGULAR CHASSIS CAB 4X2 DRW	3576 [140.8]	17,500	28.4°	26.3°	*	**	**	30.0°	27.5°	28.1°
	SD F-550 REGULAR CHASSIS CAB 4X2 DRW	4186 [164.8]	17,500	28.4°	23.4°	*	**	**	30.0°	27.5°	28.1°
	SD F-550 REGULAR CHASSIS CAB 4X2 DRW	4795 [188.8]	17,500	28.4°	23.4°	*	**	**	30.0°	27.5°	28.1°
	SD F-550 REGULAR CHASSIS CAB 4X2 DRW	5100 [200.8]	17,500	28.4°	20.8°	*	**	**	30.0°	27.5°	28.1°
	SD F-550 REGULAR CHASSIS CAB 4X2 DRW	5100 [200.8]	19,000	28.4°	20.8°	*	**	**	30.0°	27.5°	28.1°
	SD F-550 REGULAR CHASSIS CAB 4X4 DRW	3576 [140.8]	17,500	28.4°	26.3°	*	**	**	30.0°	27.5°	28.1°
	SD F-550 REGULAR CHASSIS CAB 4X4 DRW	4186 [164.8]	17,500	28.4°	23.6°	*	**	**	30.0°	27.5°	28.1°
	SD F-550 REGULAR CHASSIS CAB 4X4 DRW	4795 [188.8]	17,500	28.4°	23.6°	*	**	**	30.0°	27.5°	28.1°
	SD F-550 REGULAR CHASSIS CAB 4X4 DRW	5100 [200.8]	17,500	28.4°	20.8°	*	**	**	30.0°	27.5°	28.1°
	SD F-550 SUPER CHASSIS CAB 4X2 DRW	4110 [161.8]	17,500	28.4°	24.1°	*	**	**	30.0°	27.5°	28.1°
	SD F-550 SUPER CHASSIS CAB 4X4 DRW	4110 [161.8]	17,500	28.4°	24.1°	*	**	**	30.0°	27.5°	28.1°
	SD F-550 CREW CHASSIS CAB 4X2	4475 [176.2]	17,500	28.4°	22.4°	*	**	**	30.0°	27.5°	28.1°
	SD F-550 CREW CHASSIS CAB 4X2	5085 [200.2]	17,500	28.4°	22.4°	*	**	**	30.0°	27.5°	28.1°
	SD F-550 CREW CHASSIS CAB 4X4	4475 [176.2]	17,500	28.4°	22.4°	*	**	**	30.0°	27.5°	28.1°
	SD F-550 CREW CHASSIS CAB 4X4	5085 [200.2]	17,500	28.4°	22.4°	*	**	**	30.0°	27.5°	28.1°

NOTES — [ ] DIMENSIONS ARE INCHES.

* — SPARE TIRE NOT MOUNTED UNDER THE CHASSIS.

** — NOT AVAILABLE ON CHASSIS CAB

FRAME DATA
SUPER DUTY F-250/350
STYLESIDE PICKUP – WIDE FRAME

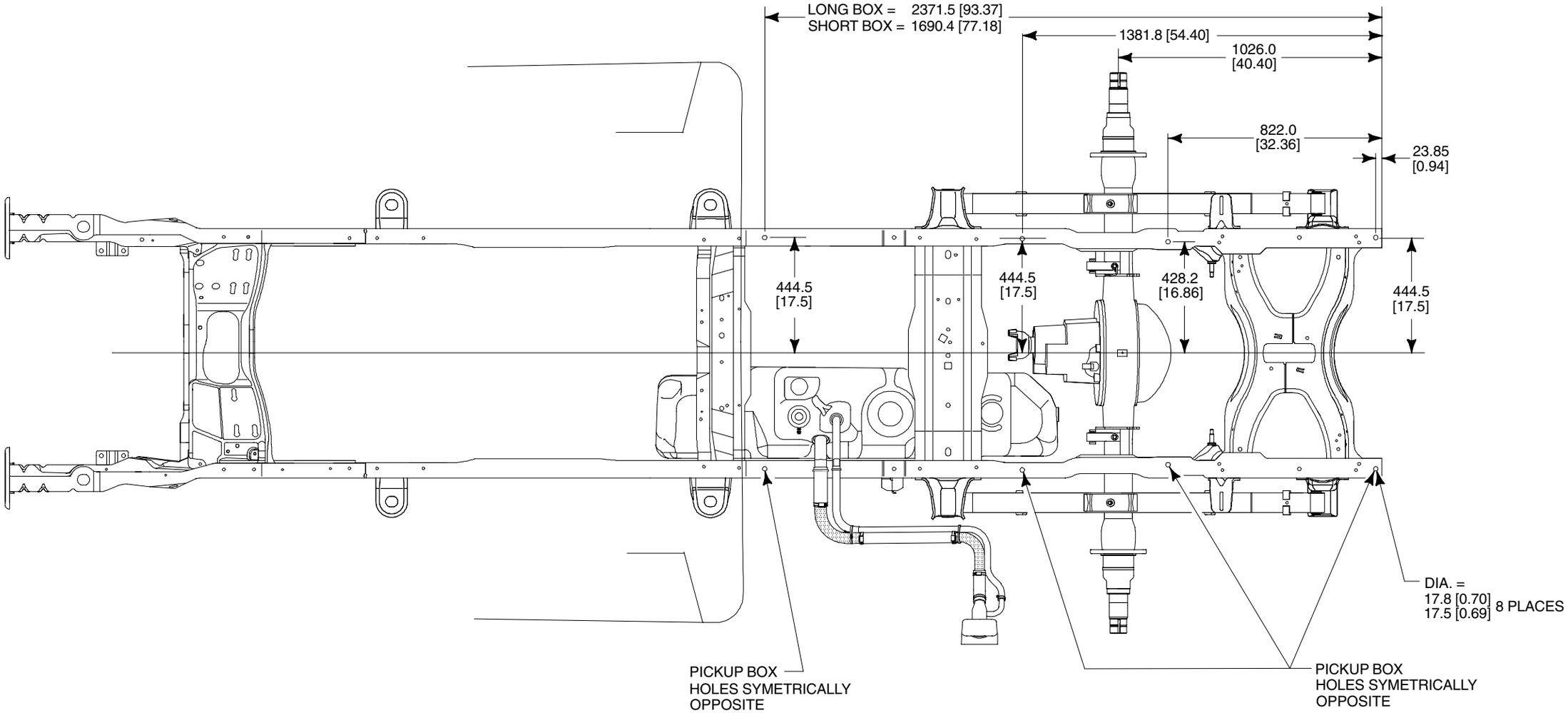

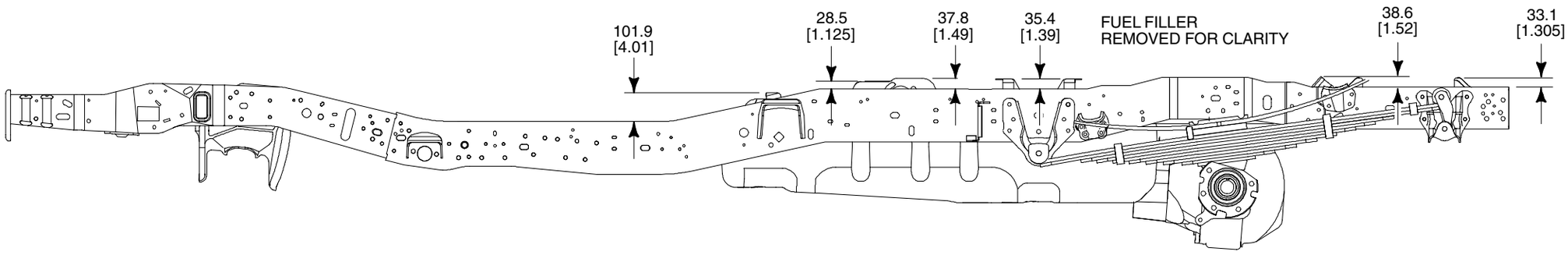

BB0438

NOTES — [ ] DIMENSIONS ARE INCHES.
— REAR PICKUP BOX MOUNTING HOLES ARE COMMON TO ALL CAB TYPES — REGULAR, SUPERCAB AND CREW CAB.

EXHAUST/FUEL SYSTEMS
SUPER DUTY F-SERIES
PICKUP/BOX DELETE – WIDE FRAME

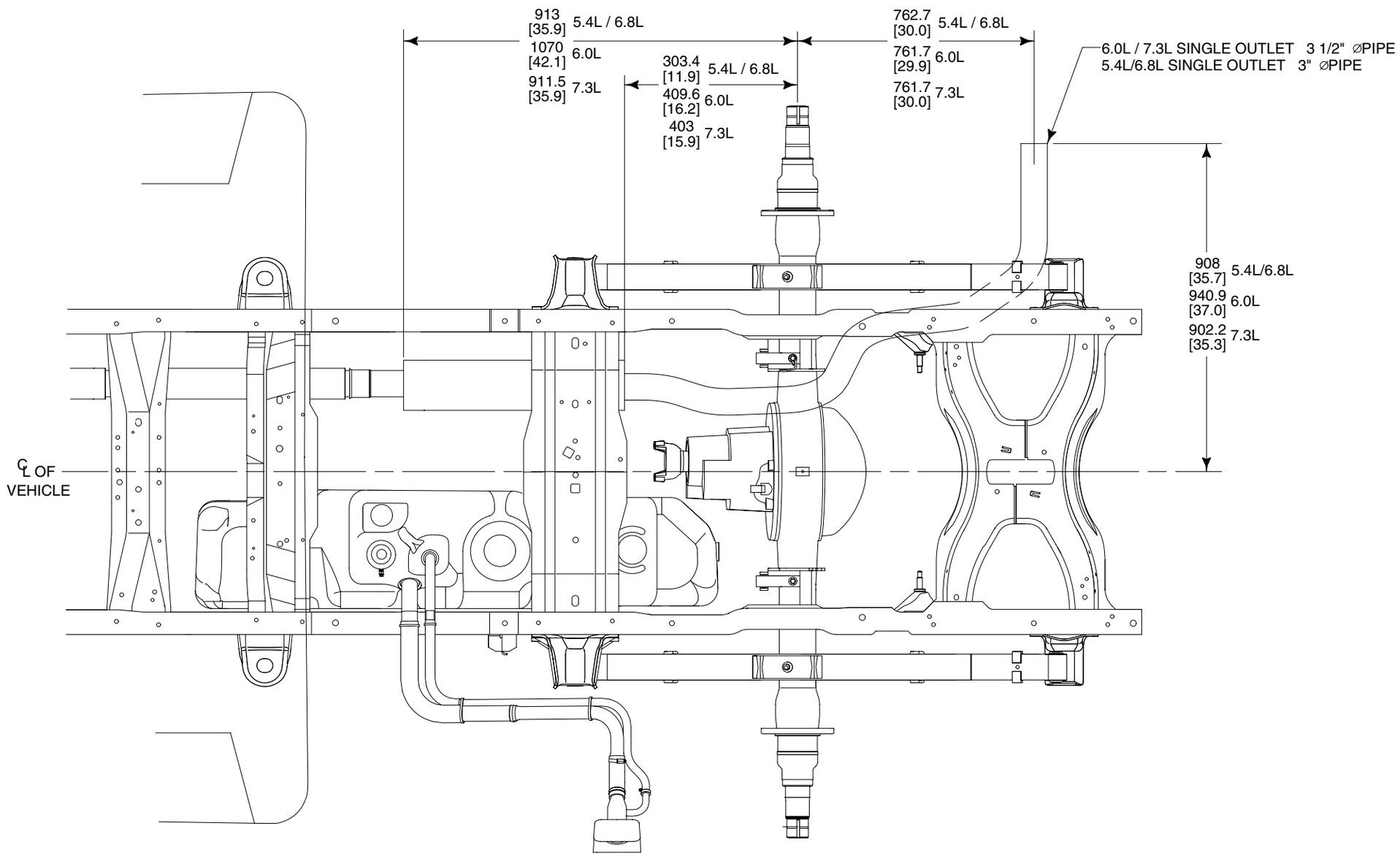

BB0440 2003

NOTE — [ ] DIMENSIONS ARE INCHES.

FUEL FILLER PIPE LOCATION AND DIMENSIONS
SUPER DUTY F-SERIES
PICKUP/BOX DELETE – WIDE FRAME

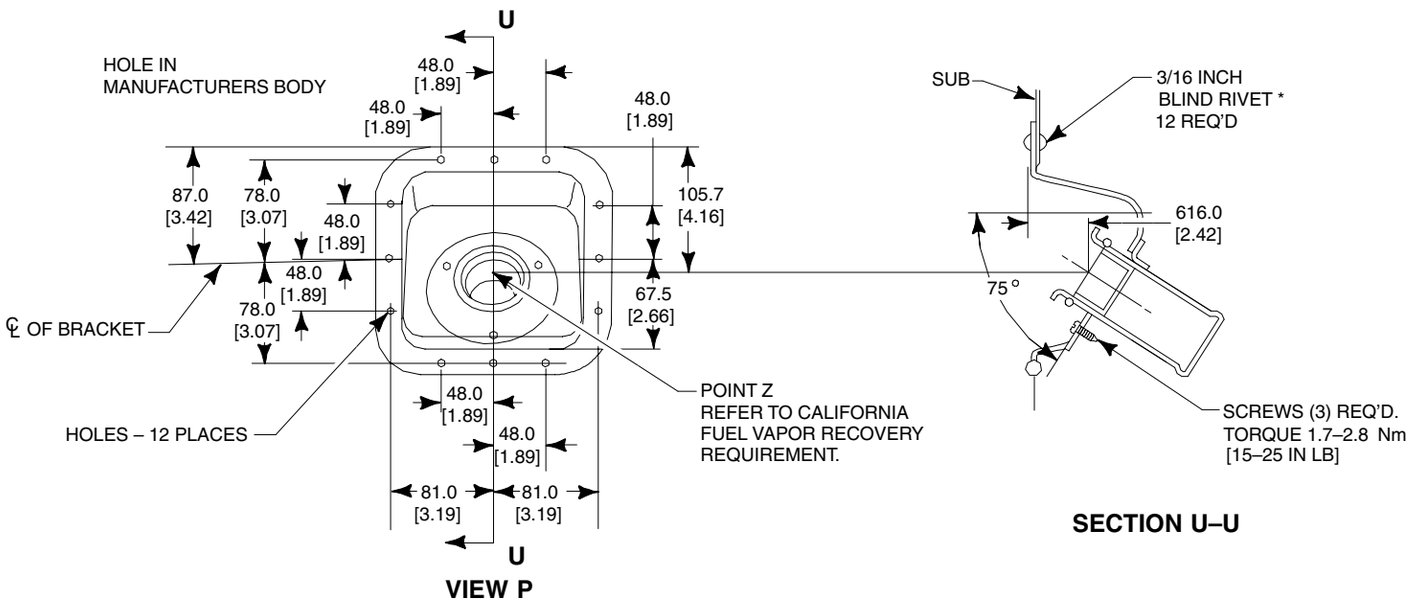

(CA) BACK OF CAB TO CENTERLINE OF REAR AXLE			
		40 IN. CA	56 IN. CA
		WHEELBASE	WHEELBASE
	Regular Cab SuperCab Crew Cab	not available 3602mm [141.8] 3967mm [156.2]	3480mm [137.0] 4013mm [158.0] 4380mm [172.4]
∇ A	MIN.	404mm [15.9]	620mm [24.4]
	MAX.	716mm [28.2]	932mm [36.7]
∇ C	MIN.	540mm [21.25]	540mm [21.25]
	MAX.	743mm [29.25]	743mm [29.25]
∇ D	MIN.	267mm [10.5]	267mm [10.5]
	MAX.	343mm [13.5]	343mm [13.5]

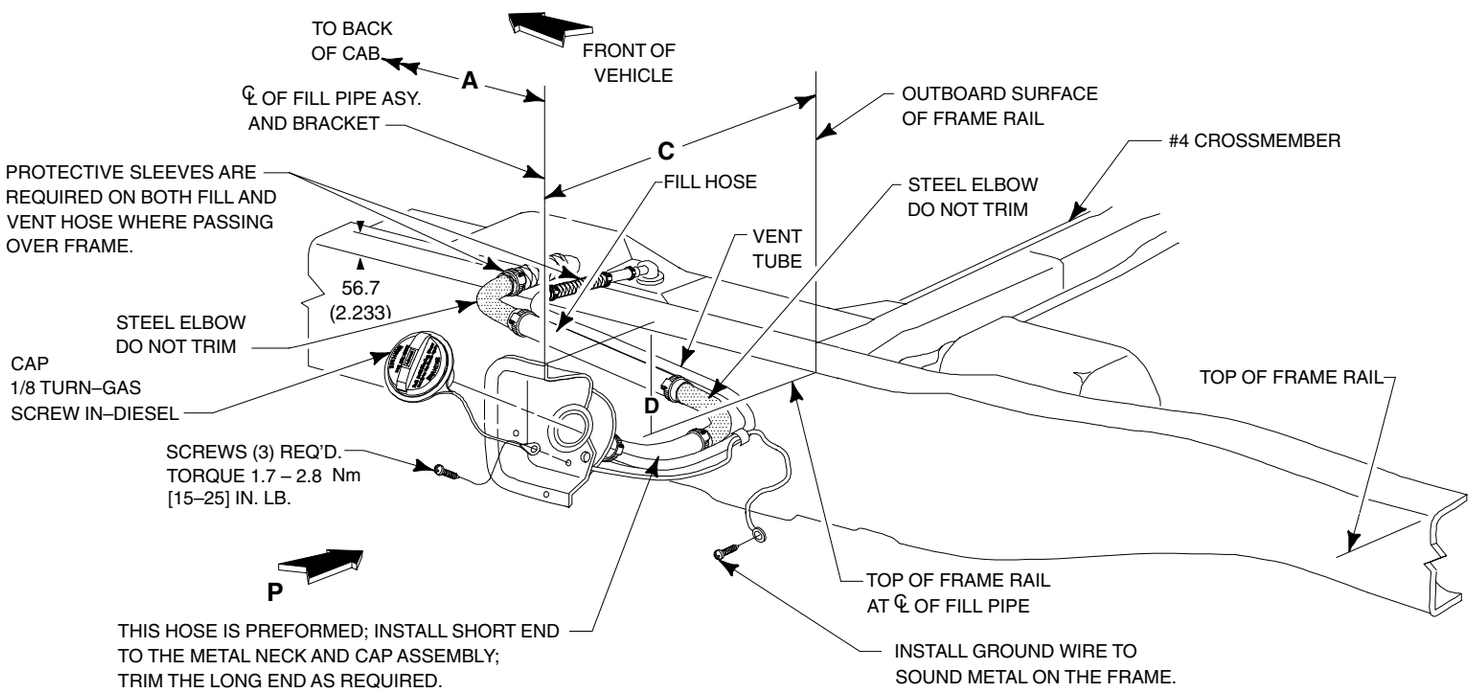

BB0435

NOTES — [ ] DIMENSIONS ARE INCHES.

TORQUE ALL WORM GEAR DRIVEN HOSE CLAMPS TO 2.8 - 3.9 NM 25-35 IN-LB

* NOT SUPPLIED BY FORD MOTOR COMPANY

∇ CRITICAL CONTROL ITEM

REMOVE AND DISCARD THE FORD INSTALLED FUEL FILL SYSTEM COMPONENTS (PROVIDED FOR SHIPPING PURPOSES ONLY) EXCEPT SAVE AND REUSE THE METAL NECK AND CAP ASSEMBLY.

USE THE NEW HOSES, PIPES, SCUFF GUARDS, TIE WRAPS AND CLAMPS PROVIDED IN THE DUNNAGE KIT.

THE COMPLETED FUEL FILL SYSTEM MUST PROVIDE A 4 DEGREE MINIMUM, CONTINOUS, DOWNWARD SLOPE TO THE FUEL TANK. ADDITIONAL SUPPORT MAY BE REQUIRED TO PREVENT HOSE SAGGING WHICH COULD CAUSE SPRAY OR SPITBACK DURING NORMAL FUELING OPERATIONS.

DO NOT EXTEND THE FUEL FILL SYSTEM OUTBOARD OF THE SECOND UNIT BODY.

FUEL FILLER PIPE LOCATION AND DIMENSIONS
SUPER DUTY F-SERIES CHASSIS CAB

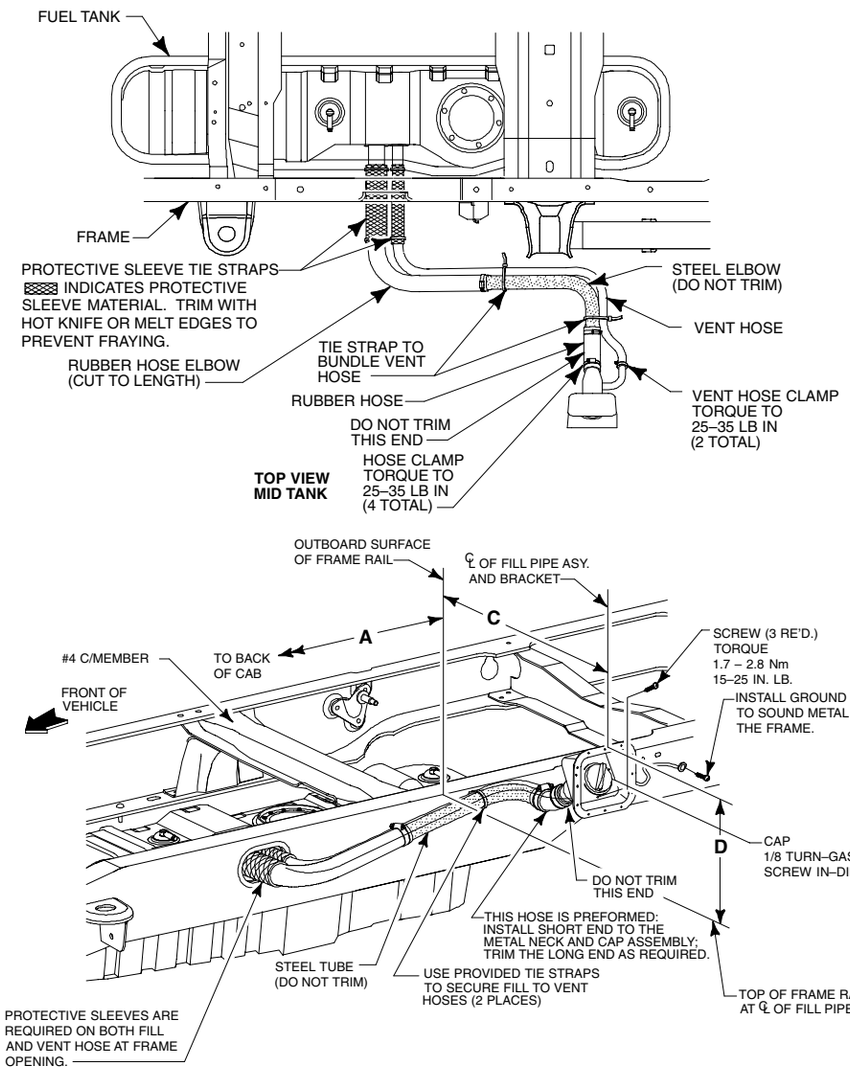

MIDSHIP FUEL FILL SYSTEM (OPTIONAL ON CHASSIS CAB)

BB0468

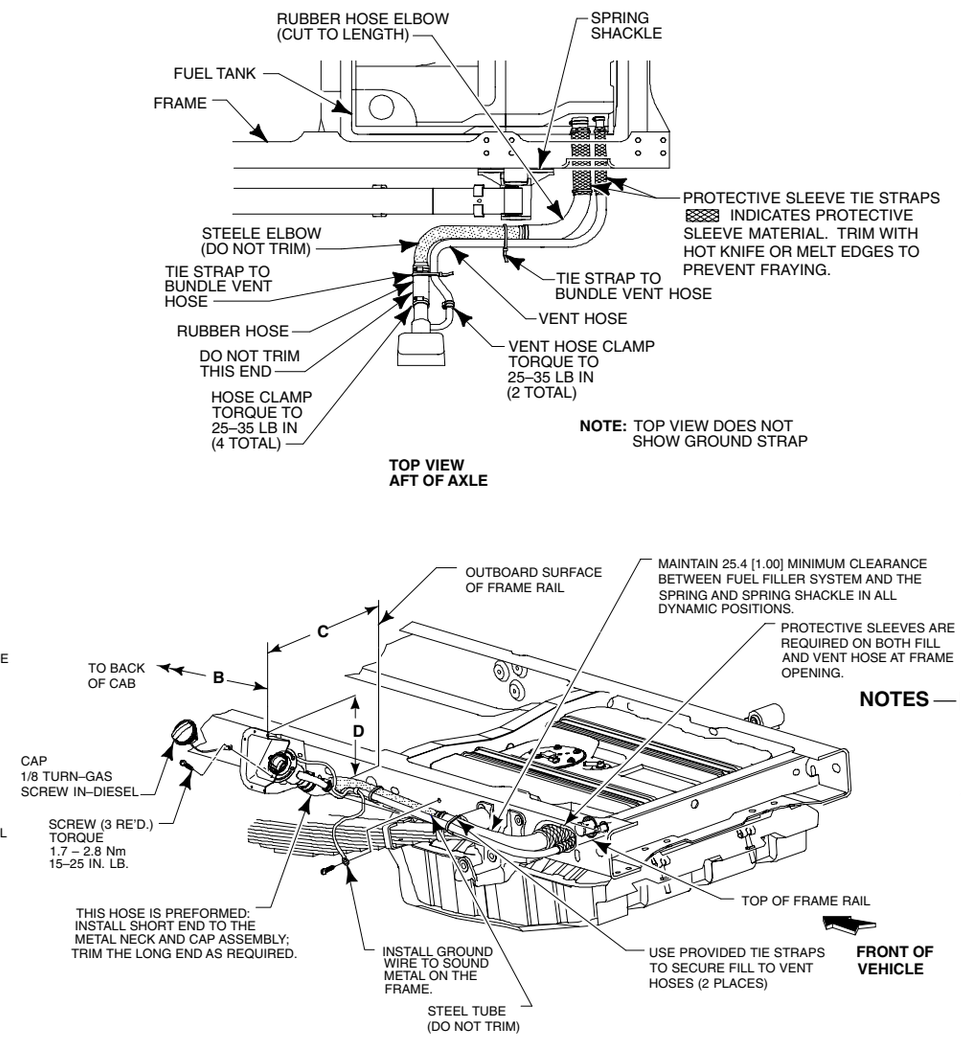

AFT OF AXLE FUEL FILL SYSTEM (STANDARD ON CHASSIS CAB)

(CA) BACK OF CAB TO CENTERLINE OF REAR AXLE					
		60 IN. CA	84 IN. CA	108 IN. CA	120 IN. CA
		WHEELBASE			
	Regular Cab	3576mm [140.8]	4186mm [164.8]		5100mm [200.8]
	SuperCab	4110mm [161.8]			
	Crew Cab	4475mm [176.2]	5085mm [200.2]	4795mm [188.8]	
∇A	MIN.	864mm [34.0]	1473mm [58.0]	2083mm [82.0]	2388mm [94.0]
	MAX.	1029mm [40.5]	1638mm [64.5]	2248mm [88.5]	2553mm [100.5]
∇B	MIN.	1981mm [78.0]	2591mm [102.0]	3200mm [126.0]	3505mm [138.0]
	MAX.	2159mm [85.0]	2769mm [109.0]	3378mm [133.0]	3683mm [145.0]
∇C	MIN.	584mm [23.0]	584mm [23.0]	584mm [23.0]	584mm [23.0]
	MAX.	787mm [31.0]	787mm [31.0]	787mm [31.0]	787mm [31.0]
∇D	MIN.	267mm [10.5]	267mm [10.5]	267mm [10.5]	267mm [10.5]
	MAX.	343mm [13.5]	343mm [13.5]	343mm [13.5]	343mm [13.5]

NOTES — [ ] DIMENSIONS ARE INCHES.

TORQUE ALL WORM GEAR DRIVEN HOSE CLAMPS TO 2.8 - 3.9 Nm 25-35 IN LB

* NOT SUPPLIED BY FORD MOTOR COMPANY

∇ CRITICAL CONTROL ITEM

REMOVE AND DISCARD THE FORD INSTALLED FUEL FILL SYSTEM COMPONENTS (PROVIDED FOR SHIPPING PURPOSES ONLY) EXCEPT SAVE AND REUSE THE METAL NECK AND CAP ASSEMBLY.

USE THE NEW HOSES, PIPES, SCUFF GUARDS, TIE WRAPS AND CLAMPS PROVIDED IN THE DUNNAGE KIT.

THE COMPLETED FUEL FILL SYSTEM MUST PROVIDE A 4 DEGREE MINIMUM, CONTINOUS, DOWNWARD SLOPE TO THE FUEL TANK. ADDITIONAL SUPPORT MAY BE REQUIRED TO PREVENT HOSE SAGGING WHICH COULD CAUSE SPRAY OR SPITBACK DURING NORMAL FUELING OPERATIONS.

DO NOT EXTEND THE FUEL FILL SYSTEM OUTBOARD OF THE SECOND UNIT BODY.

THE INSTALLATION OF TUBE EXTENSION F81A-9B149-HA WILL PERMIT THE LOCATION AFT-OF-AXLE FUEL FILL HOUSING TO BE NO FURTHER REARWARD THAN THE ℄ OF THE FILL HOSE AS IT PASSES THROUGH THE FRAME.

TRIM BOTH ENDS AS DIRECTED.

FRAME DATA — CHASSIS CAB — NARROW FRAME
SUPER DUTY — ALL WHEELBASE

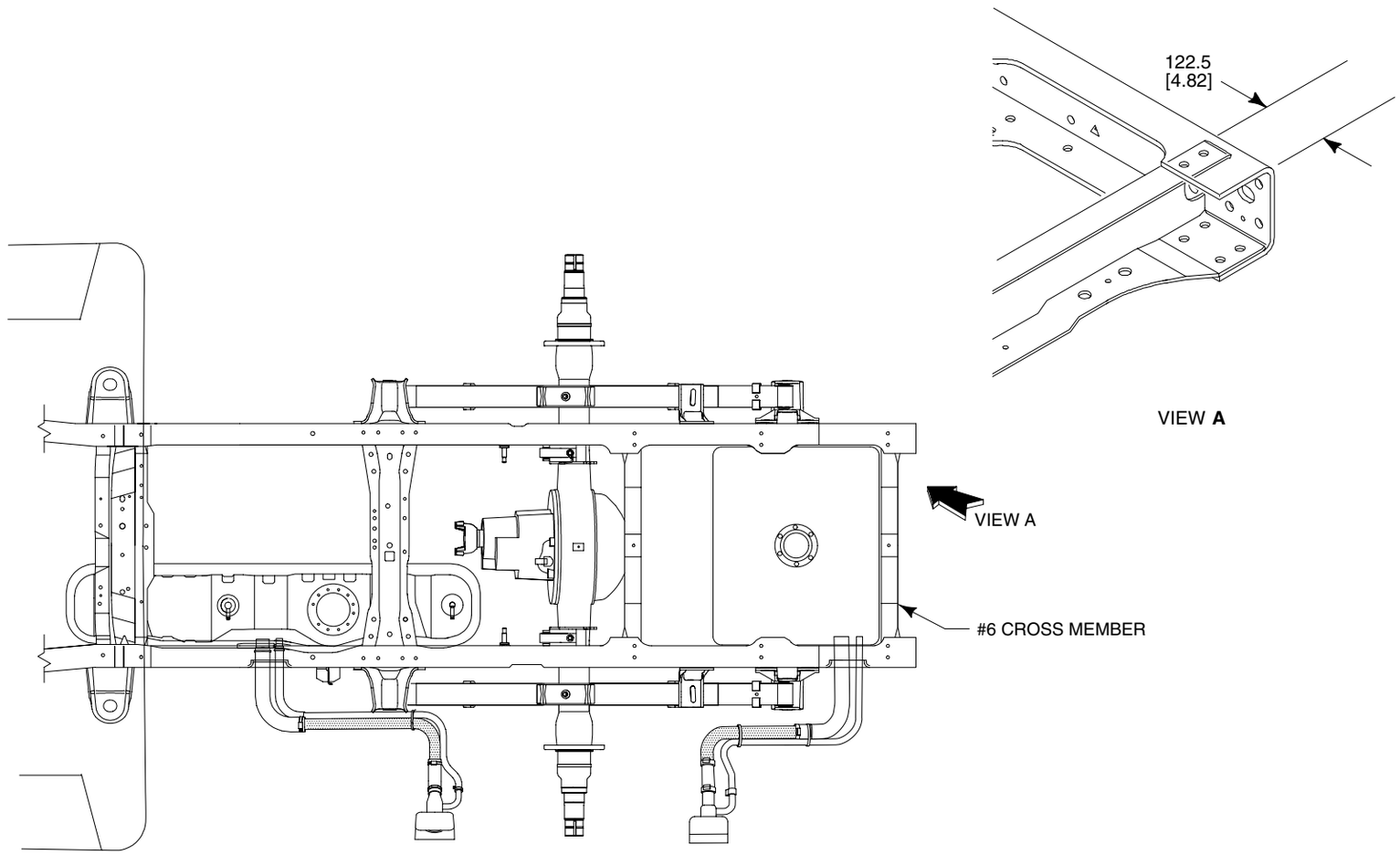

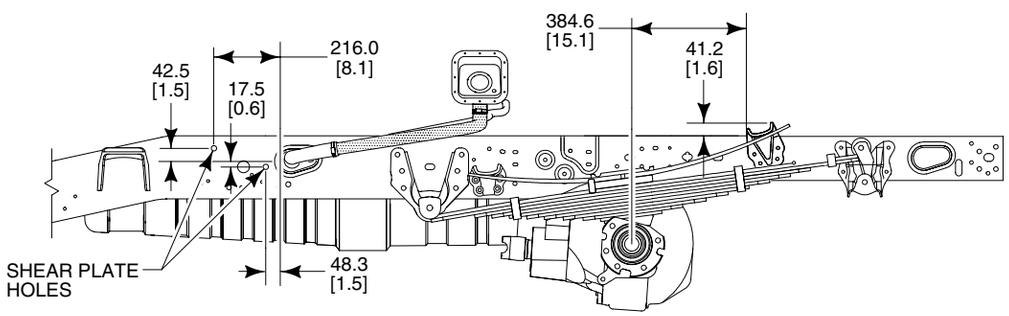

FRAME EXTENSION RECOMMENDATIONS

(applicable to all WB models)

When it is necessary to add a frame extension to the Super Duty F-Series Chassis Cab, follow these suggestions:

- Clean the back portion of the frame of wax using steam, high pressure water or solvent.
- Protect the fuel system from weld sparks and splatter, being particularly careful with the rubber fuel fill hoses.
- Select a suitable mild steel channel (not iron) with a section modulus the same as the frame to be extended.
- Chamfer both the back of the frame and the end of the extensions to be welded. Remove the 2 rearmost lower rivets attaching the rear crossmember to the frame. Weld an overlay plate on to the lower flange of the frame extension that extends approximately 2 ½" under the frame end.
- Transfer the rivet hole locations to the lower flange overlay plate and drill through the plate.
- Disconnect the battery(ies), the ABS Module, and then the Powertrain Control Module (PCM). Connect the welding ground cable to the frame at the back of the vehicle.
- Clamp the extension into place and weld all around the top and sides, but not the lower flange, following normal weld practices.
- Grind the outer side of the vertical frame web down smooth, clamp on a re-enforcement section of mild steel approximately 4" x 12" x ¼" and skip weld to the frame and extension. Do not weld at the corners of the re-enforcement to minimize stress concentrations. Note that this re-enforcement may be combined with a rear shear plate and/or underrun bumper if desired, in which case it would be an ”ELL” shape to pick up the added attachment points.
- Bolt through the lower overlay plate and frame section using 5/8" grade 5 flange head, bolts and nuts (1).
- Drill through the frame and re-enforcement and bolt using four ½" grade 5 flange head bolts & nuts (1).
- Coat the frame extension with a suitable protective paint. Reconnect the PCM Module, ABS Module and battery(ies).

  (1) If flange head fasteners are not available, regular hex heads may be substituted with one flat washer under the head of the nut and bolt.

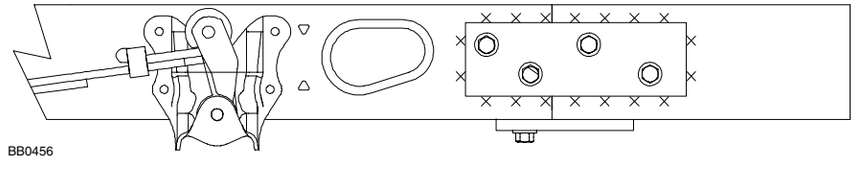

NOTE — [ ] DIMENSIONS ARE INCHES.

FRAME DATA – CHASSIS CAB – NARROW FRAME
SUPER DUTY F-450/550 – ALL WHEELBASE

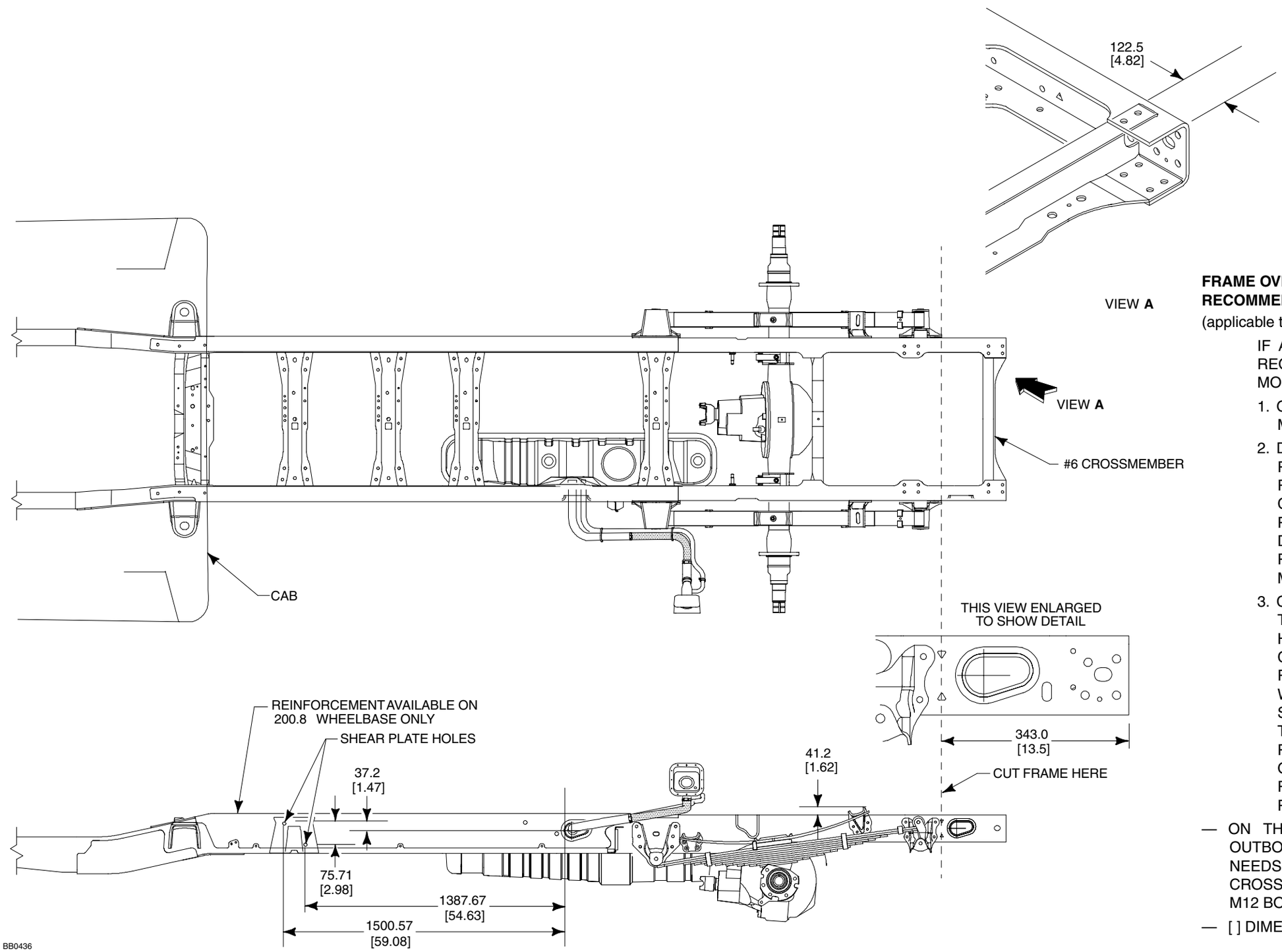

FRAME OVERHANG SHORTENING RECOMMENDATIONS

(applicable to all WB models)

IF A SHORTER REAR FRAME OVERHANG IS REQUIRED FOR THE VOCATIONAL BODY MOUNTING, THE BODY BUILDER MUST:

1. ORDER THE CHASSIS WITH THE OPTIONAL MID-SHIP FUEL TANK.
2. DRILL OUT ATTACHING RIVETS AND REMOVE THE REAR CROSSMEMBER. REINSTALL IN THE NEXT FORWARD CROSSMEMBER MOUNTING LOCATION PROVIDED USING GRADE 8 BOLTS, AS DESCRIBED IN THE RIVET REPLACEMENT PROCEDURE IN THE FORD SERVICE MANUAL.
3. CUT THE FRAME ALONG THE LINE THROUGH THE TWO TRIANGLE-SHAPED HOLES DEPICTED BELOW, USING A CUTOFF WHEEL OR SAW. A TORCH IS NOT RECOMMENDED. IF A TORCH IS USED WITHIN 4 INCHES OF THE REAR SUSPENSION MOUNTING ATTACHMENTS, THESE ATTACHMENTS MUST BE EITHER RETORQUED (WHERE BOLTS ARE USED) OR HAVE THE RIVETS REMOVED AND REPLACED WITH GRADE 8 BOLTS PER THE PROCEDURE NOTED ABOVE.

— ON THE F-450/550 CHASSES, THE FORWARD OUTBOARD REAR SUSPENSION BRACKET BOLT NEEDS TO BE SHARED WITH THE REAR CROSSMEMBER. RETORQUE WITH NEW GRADE 8 M12 BOLT AND NUT.

— [ ] DIMENSIONS ARE INCHES.

EXHAUST/FUEL SYSTEMS
CHASSIS CAB — NARROW FRAME

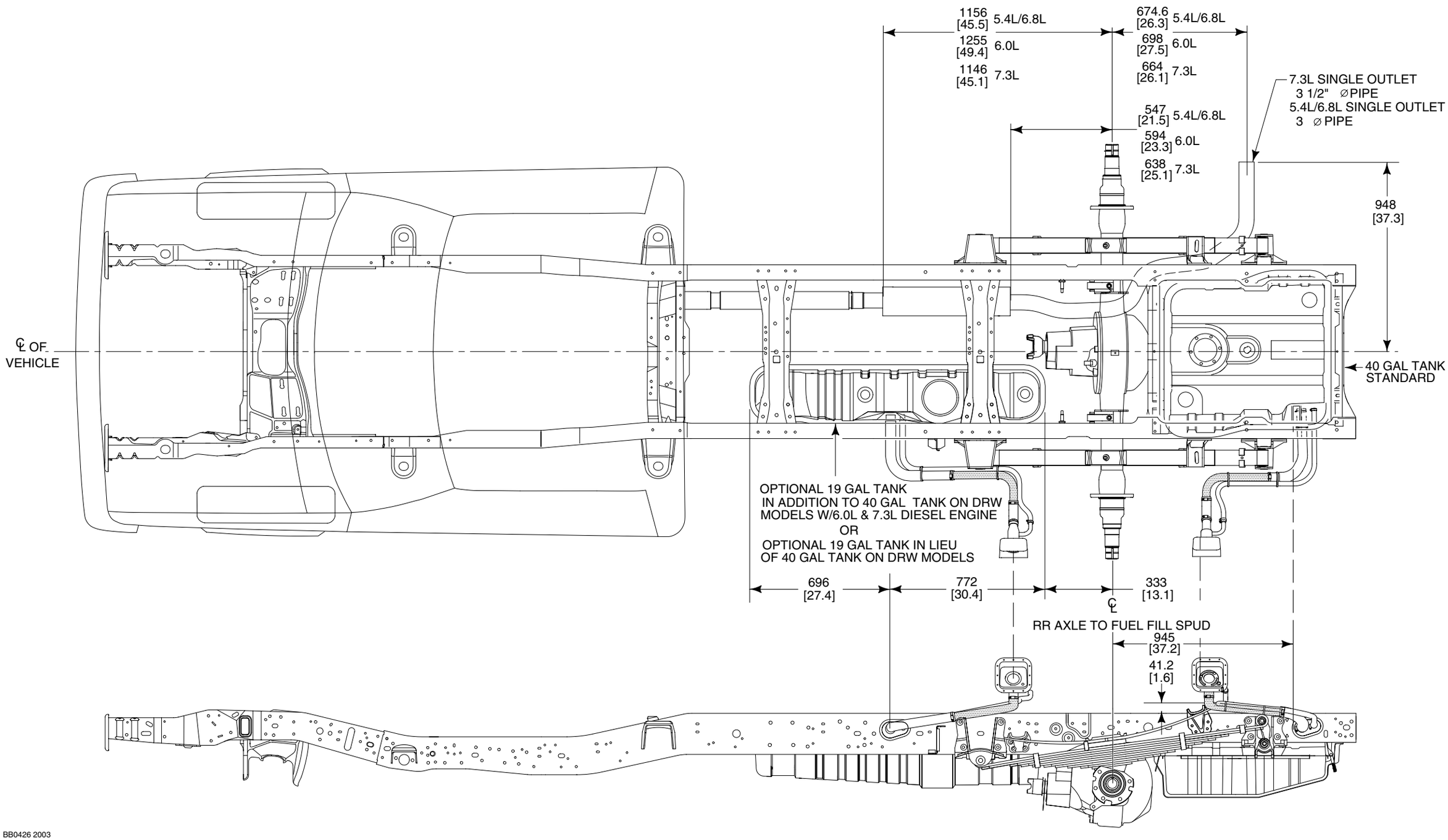

NOTE — [ ] DIMENSIONS ARE INCHES.

F-SUPER DUTY CLASS A MOTOR HOME CHASSIS (F53)
CHASSIS DIMENSIONS

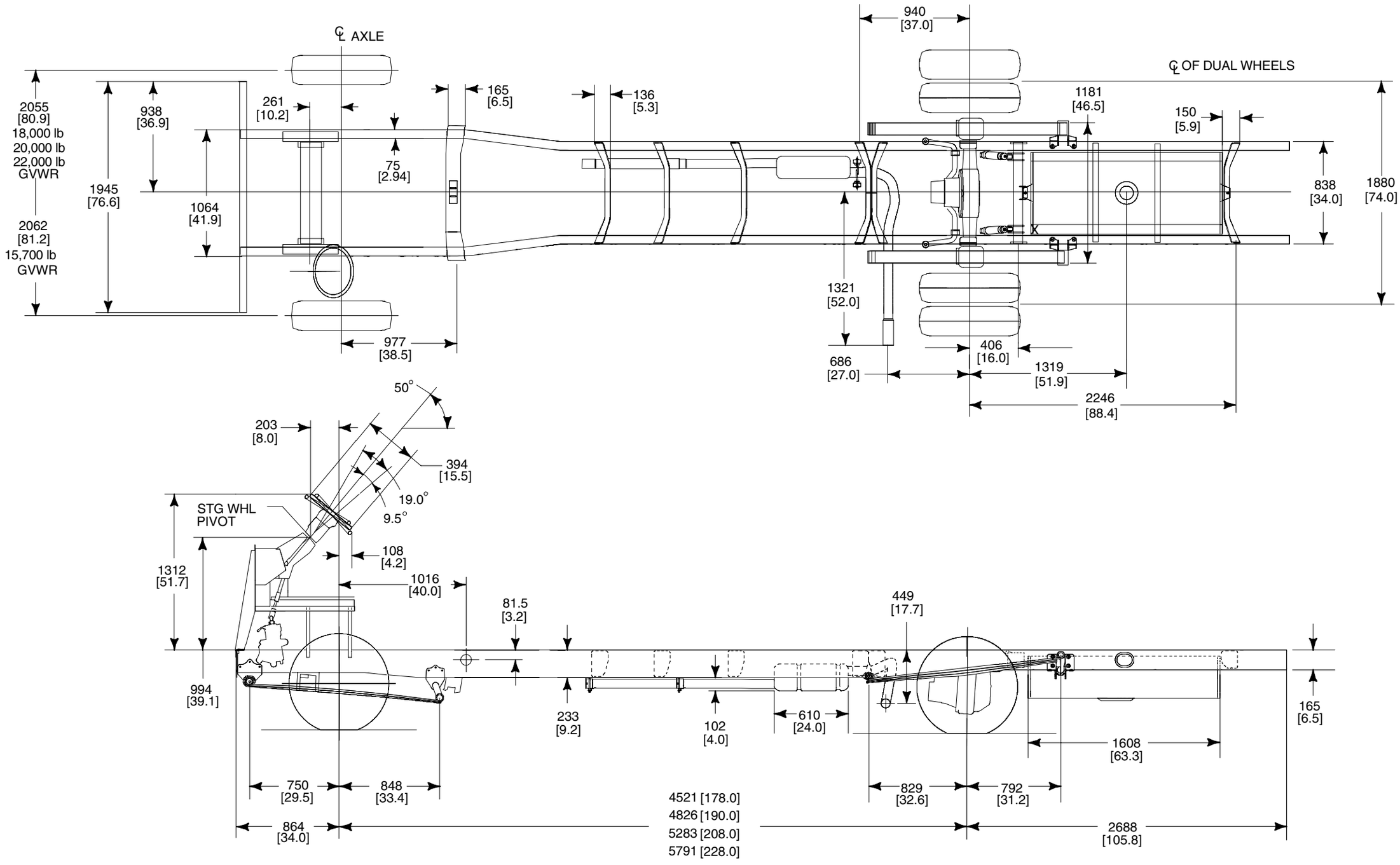

NOTE — [ ] DIMENSIONS ARE INCHES.

F-SUPER DUTY CLASS A MOTOR HOME CHASSIS (F53)
FUEL FILLER PIPE INSTALLATION

NOTE: Do Not Scale Drawings

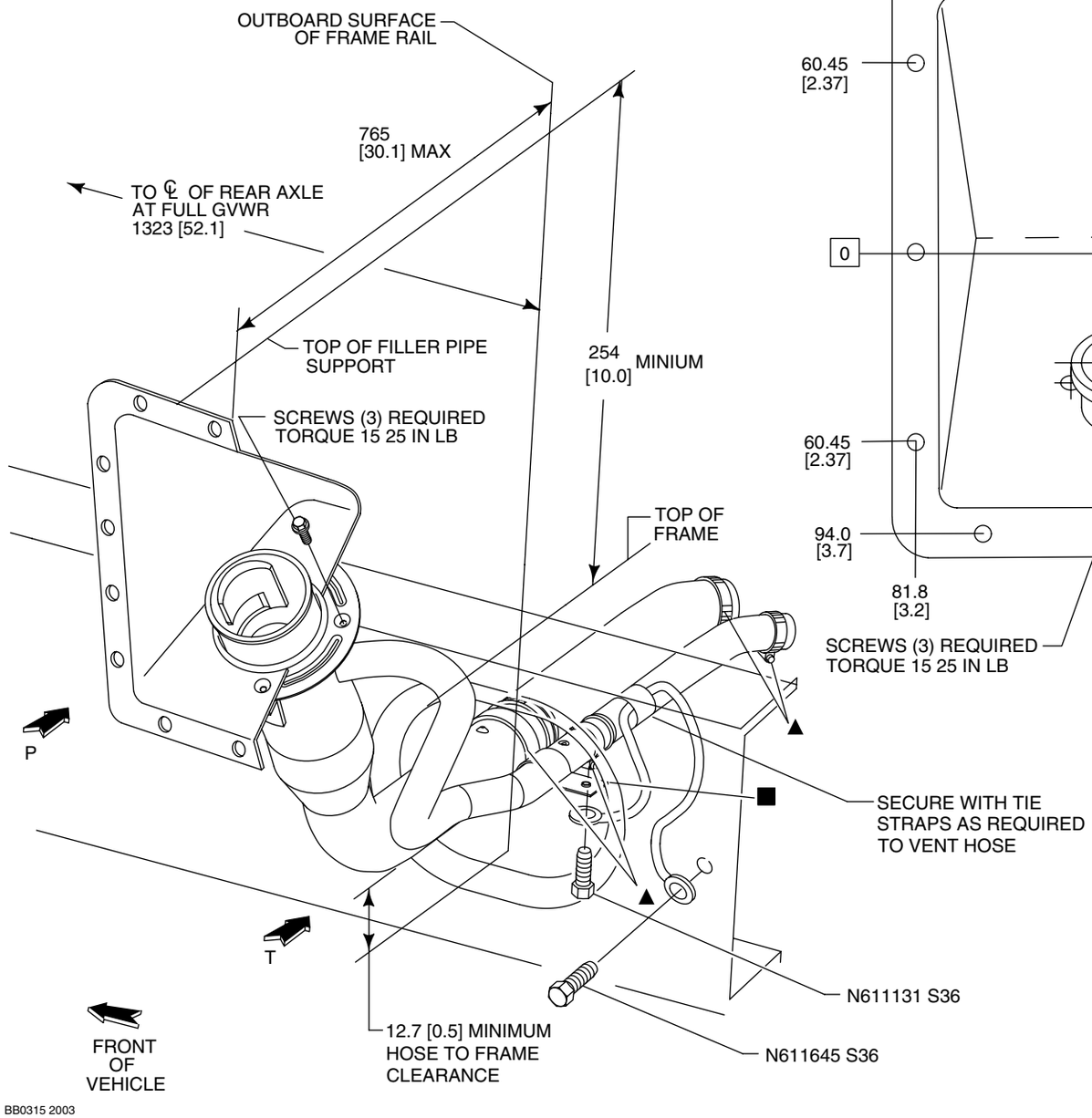

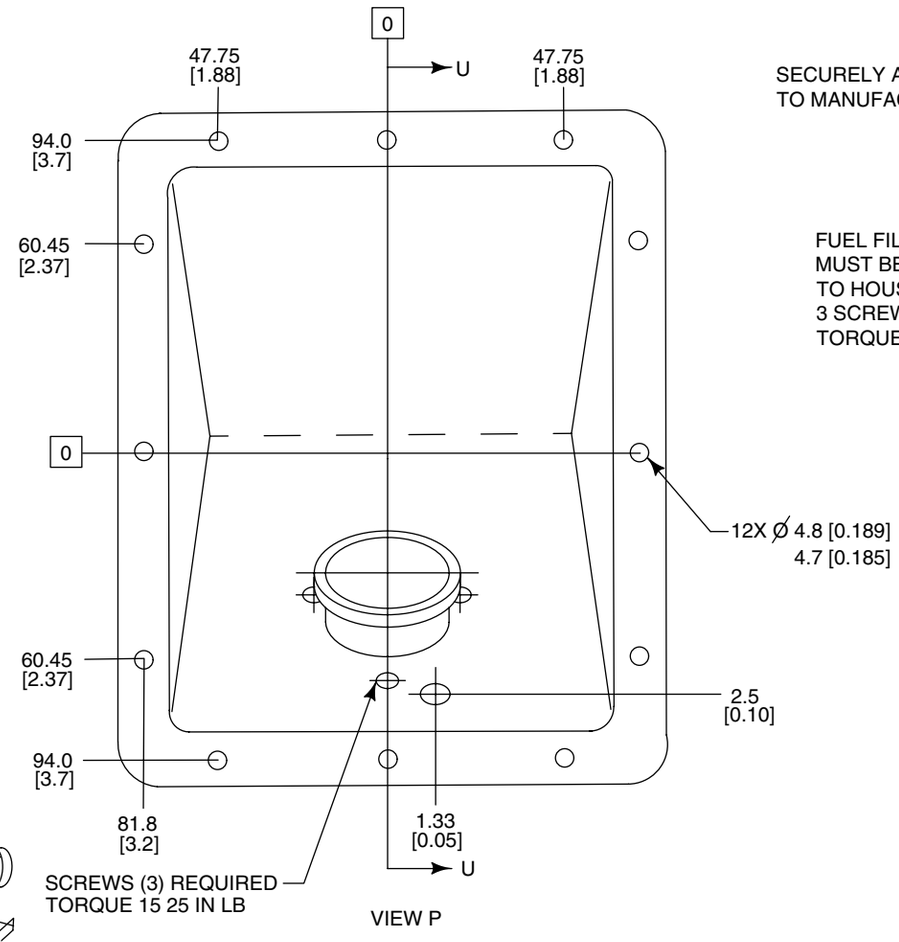

VIEW P

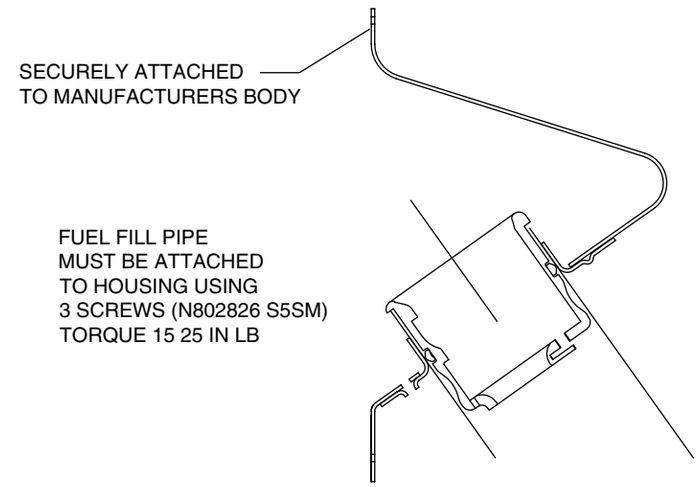

SECTION U U

✳ WORM GEAR DRIVEN HOSE CLAMP STRUCTURAL BRACKET AND BLIND RIVETS ARE NOT PROVIDED BY FORD MOTOR COMPANY

● DIMENSIONS USING HOSE AS SUPPLIED BY FORD MOTOR COMPANY

▲ WORM GEAR DRIVEN HOSE CLAMPS TORQUE 2.8 4.0 NEWTON METERS (25 35 IN LBS)

■ WORM GEAR DRIVEN HOSE CLAMP ✳ MUST FIT SECURELY OVER A 57.2 (2.25) O.D. FILL PIPE AND SECOND STAGE VEHICLE MANUFACTURERS BRACKET ✳

NOTE: MAKE SURE THE FILLER NECK SUPPORT IS INSTALLED PROPERLY AS PER THE NOTE ON PAGE 186 OF THIS SECTION.

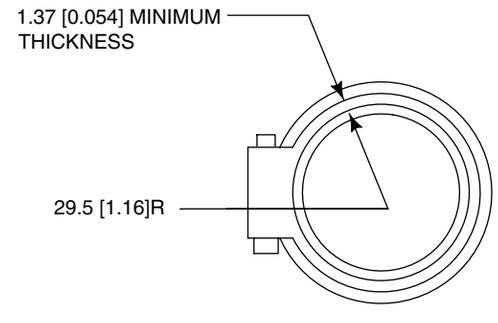

VIEW T

WARNING:
IT IS MANDATORY TO USE THE SUPPLIED RUBBER HOSE FOR INSTALLING THE FUEL PIPE. ANY INCREASE IN LENGTH OR CHANGE IN MATERIAL OF THE SUPPLIED RUBBER HOSE WILL RESULT IN VOIDING THE EVAPORATE EMISSIONS CERTIFICATION.

BB0315 2003

NOTE — [ ] DIMENSIONS ARE INCHES.

F-SUPER DUTY CLASS A MOTOR HOME CHASSIS (F53)
FRONT CROSSMEMBER (CM) LOCATIONS

DIM.	178″ WB	190″ WB	208″ WB	228″ WB
A	599 [23.6]	599 [23.6]	599 [23.6]	599 [23.6]
B	1808 [71.2]	1808 [71.2]	1808 [71.2]	1808 [71.2]
C	NA	NA	3002 [118.2]	3282 [129.2]
D	NA	NA	NA	4004 [157.6]
E	3385 [133.3]	3436 [135.3]	4147 [163.3]	4655 [183.3]
F	4432 [174.5]	4737 [186.5]	5194 [204.5]	5702 [224.5]
G	4656 [183.3]	4960 [195.3]	5418 [213.3]	5926 [233.3]
H	5778 [227.5]	6083 [239.5]	6540 [257.5]	7048 [277.5]
I	7618 [299.9]	7923 [311.9]	8380 [329.9]	8888 [349.9]
MEASUREMENTS TAKEN FROM FRONT EDGE OF LOWER FLANGE OF RAIL.				

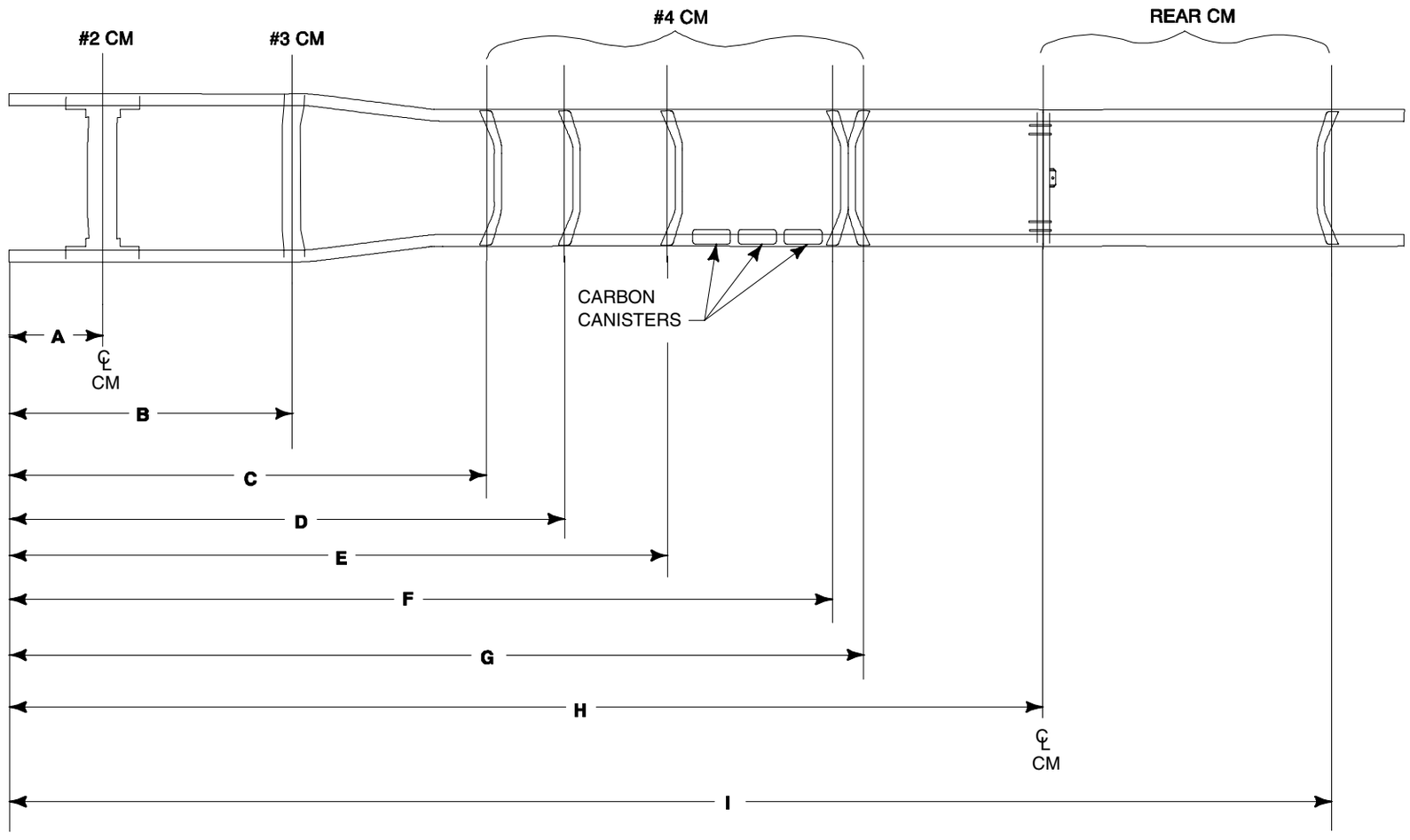

NOTES — UNLESS OTHERWISE NOTED, DIMENSIONS ARE TO THE CENTERLINE OF CROSSMEMBER FASTENERS.
— MEASUREMENTS FROM FRONT EDGE OF LOWER FRAME. SUBTRACT 9 MM IF MEASURED FROM TOP FRONT EDGE OF FRAME WEB.
— [ ] DIMENSIONS ARE INCHES.

F-SUPER DUTY CLASS A MOTOR HOME CHASSIS (F53)
FRONT STRUCTURE

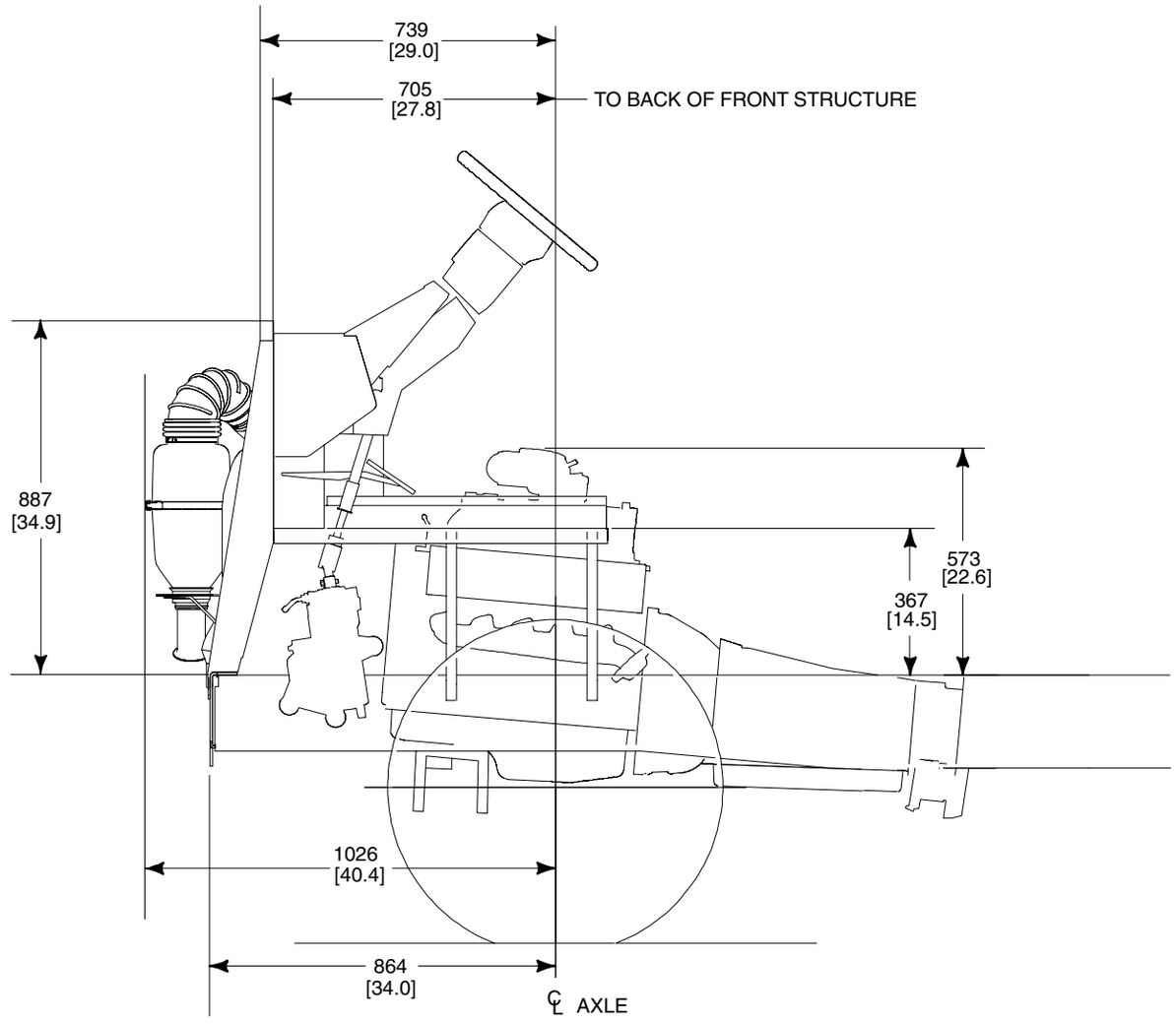

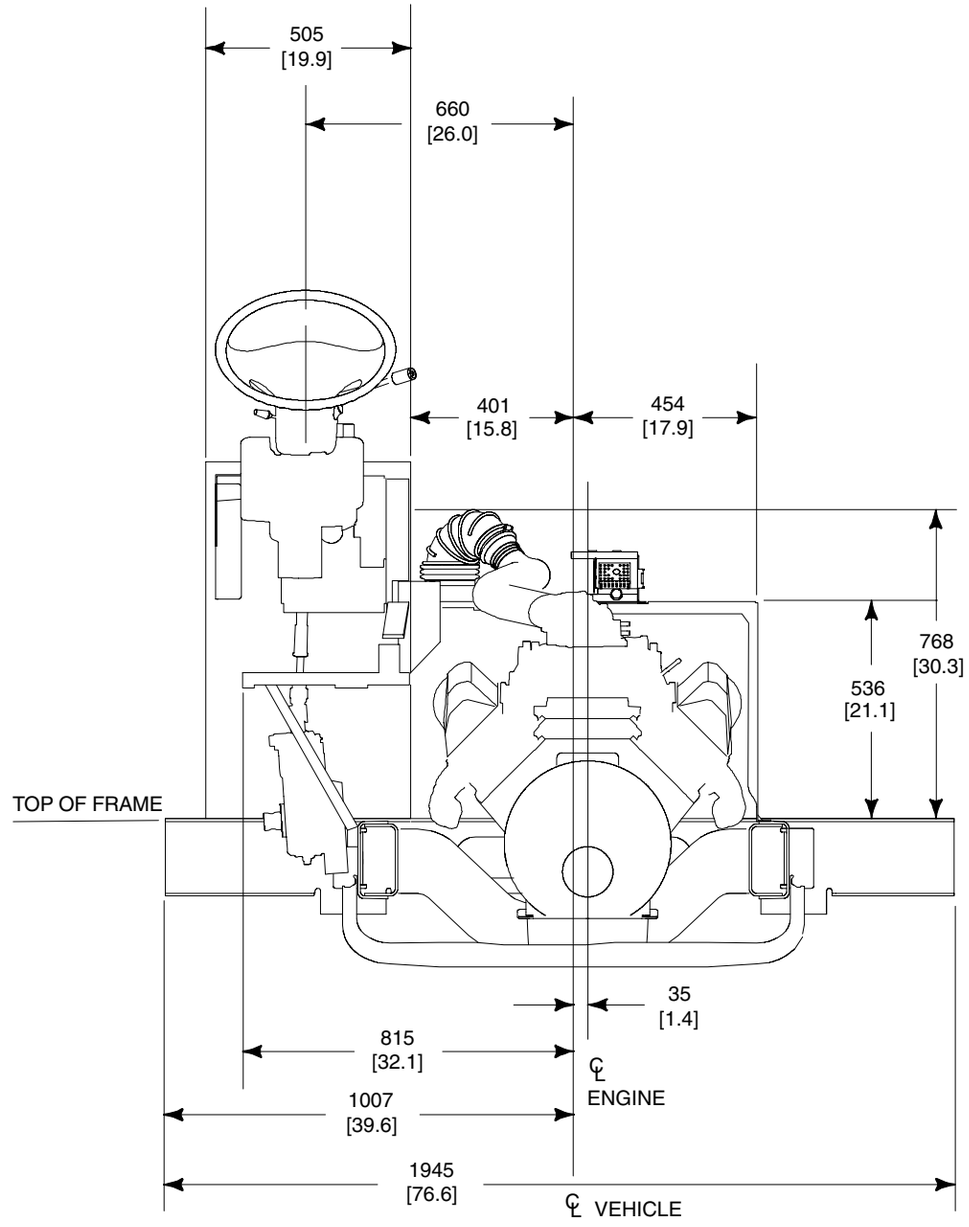

BB0314

NOTE — [ ] DIMENSIONS ARE INCHES.

F-SUPER DUTY CLASS A MOTOR HOME CHASSIS (F53)
AXLE/TIRE/VEHICLE HEIGHT DATA

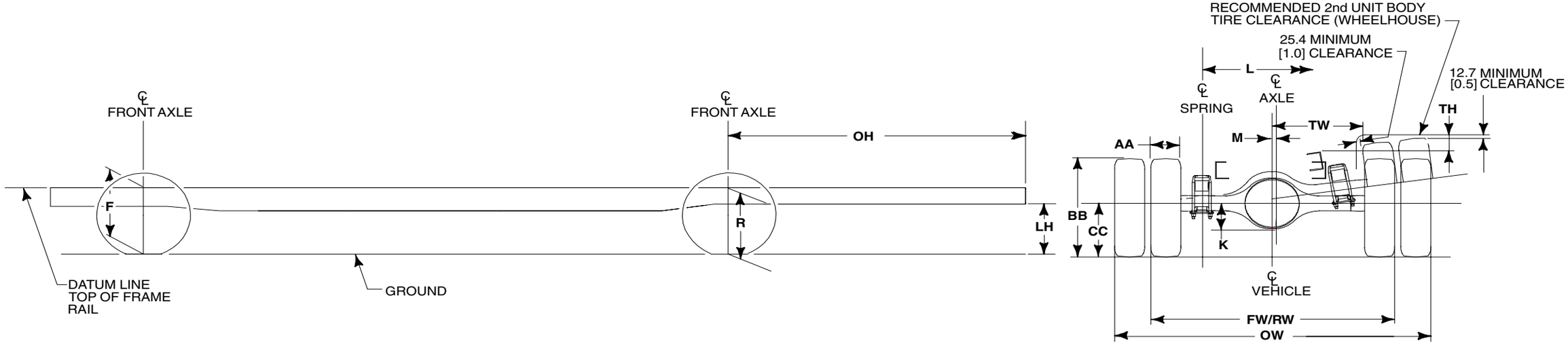

MODEL	WB	GVWR	BASE TIRE	F HEIGHT AT FRONT WHEEL (1) (2) AT SPRING RATING	R HEIGHT AT REAR AXLE (1) (2) AT SPRING RATING	LH (2) AT SPRING RATING	OH	K	L	M	AA	BB	CC	FW	RW	REAR WHEEL MEASUREMENTS OW	TH	TW
F-Super Duty Class A Motor Home Chassis (F53)	4521 [178.0]	15,700	225/70R19.5	655 [25.8]	684 [26.9]	538 [21.2]	2688 [105.8]	177 [7.0]	1079 [42.5]	24 [1.0]	236 [9.3]	779 [30.7]	373 [14.7]	2291 [90.2]	1857 [73.1]	2310 [90.9]	270 [10.6]	638 [25.1]
	4826 [190.0]																	
	4521 [178.0]	18,000	245/70R19.5	672 [26.5]	702 [27.6]	552 [21.7]	2688 [105.8]	177 [7.0]	1079 [42.5]	24 [1.0]	254 [10.0]	810 [31.9]	391 [15.4]	2327 [91.6]	1848 [72.8]	2407 [94.8]	283 [11.1]	638 [25.1]
	4826 [190.0]																	
	5283 [208.0]																	
	5791 [228.0]																	
	5283 [208.0]	20,500	245/70R19.5	672 [26.5]	715 [28.1]	565 [22.2]	2688 [105.8]	214 [8.4]	1079 [42.5]	24 [1.0]	254 [10.0]	810 [31.9]	391 [15.4]	2327 [91.6]	1848 [72.8]	2407 [94.8]	283 [11.1]	638 [25.1]
	5791 [228.0]																	
	5283 [208.0]	22,000	245/70R19.5	672 [26.5]	715 [28.1]	565 [22.2]	2688 [105.8]	214 [8.4]	1079 [42.5]	24 [1.0]	254 [10.0]	810 [31.9]	391 [15.4]	2327 [91.6]	1848 [72.8]	2407 [94.8]	283 [11.1]	638 [25.1]
	5791 [228.0]																	

(1) — The **F** and **R** Height Data represent dimensions from ground to “frame datum line” (top of frame rail) of a base/standard vehicle with no options.
(2) — These dimensions are for reference only. Actual height may vary due to production tolerances.

NOTE — [ ] DIMENSIONS ARE INCHES.

F-SUPER DUTY CLASS A MOTOR HOME CHASSIS (F53)
BODY AND SPECIAL EQUIPMENT
INSTALLATION PRECAUTIONS

GENERAL NOTES

1. Adherence to the following suggestions and warnings should not be construed as implying compliance with any particular U.S. or Canadian regulation. See the *Incomplete Vehicle Manual* (IVM) for specific information regarding compliance with U.S. or Canadian regulations.
2. The weight of the basic vehicle plus the sum of the weights of:
   (a) additions to the basic vehicle (body and equipment),
   (b) other cargo,
   (c) fuel sufficient to fill all tanks, and
   (d) the maximum number of occupants, at 150 lb per occupant

   must not exceed the GVWR of the vehicle as specified on the incomplete vehicle label attached to the IVM and must be distributed so that neither the front or rear GAWR (as specified on the Incomplete Vehicle label) is exceeded. Also see the IVM for further instructions. All heavy equipment installed by the body builder should be placed as close to the floor as practical to maintain a minimum vertical center of gravity. Side-to-side loading should be as symmetrical as possible about the vehicle longitudinal centerline to prevent vehicle lean and adverse steering and braking characteristics.
3. Rear departure angle of 8.1° minimum for the motor home chassis should be maintained to protect the fuel tank at GVWR. Rear bumpers or underbody skids should be considered to minimize interference to ground.
4. All subsequent manufacturer-installed items must be at least 3/4 inch away from fuel tank(s), rotating driveline components, and all other moving components. Also, they must be clear of all axle total movements.
5. EMISSIONS CONTROLS — See the *Incomplete Vehicle Manual*.
6. NOISE REGULATIONS — See the *Incomplete Vehicle Manual*.
7. SAFETY CERTIFICAITON INFORMATION — See the *Incomplete Vehicle Manual*.

BODY

1. Any structural member removed from the body or cowl assembly areas, except for the dunnage box supports, must be replaced or included in the body structure of any special body installed.
2. It is mandatory that the body builder establish a structurally sound combination of body and vehicle structure by securely fastening together the body and the frame. This requires a rigid body design and a thoroughly planned system of bolts, welds and other fastenings between the frame and body. To ensure structural integrity is maintained, the vehicle's front structure must not be modified.
3. To avoid interference problems with suspension components, body attachments to frame should not protrude below side member flange.
4. An access panel may be provided in the vehicle floor by the body builder to service the in-tank fuel pump.
5. The body builder should consider the addition of sound insulation to minimize engine and fan noise in the driver compartment.

FRAME

1. **FRAME WEB** — holes to mount brackets, outriggers, and supports may be drilled in the vertical side rail web with the following restrictions:
   - Material between edge of hole and inside of upper or lower flange must be at least 1.50 inch.
   - Minimum edge distance between any two holes must be at least twice the diameter of the largest hole.
   - Holes must be no larger than 0.75 inch in diameter. Avoid close vertical succession of fasteners.
   - All attaching fasteners, including flat washers, must be of high strength steel (Grade 8 or metric equivalent).
2. **FRAME FLANGE** — holes may be drilled in the horizontal frame flanges with the following restrictions:
   - Material between edge of hole and radius/edge of flange must be at least 1.0 inch.
   - Minimum edge distance between any two holes must be at least twice the diameter of the largest hole.
   - Holes must be no larger than 0.5 inch in diameter.
3. Welding to the frame flange is not recommended; welding to the vertical side web is preferred.
4. The frame for the motor home chassis is designed to permit removal of the engine and transmission out-the-bottom. This is facilitated by bolt-in No. 2 and No.3 crossmembers. Body builders should not add permanent structures which preclude powertrain removal.

ENGINE

1. Engine compartments must be designed to eliminate any air circulation restriction that would affect the air induction and cooling systems. Motor home engine compartments must provide adequate flow-through ventilation to prevent local temperatures from exceeding recommended maximums. Limits for critical engine components are shown in the table (see Cooling) on next page.
2. No modification of the air cleaner inlet duct is permissible. Removal or modification of this duct will affect function of the mass air meter, possibly causing driveability problems and increased tailpipe emissions.
3. The electronic speed control system used on the motor home chassis does not require any vacuum source or reservoir.

SUSPENSION AND STEERING

1. No vehicle or component alterations are allowed which restrict or prevent steering wheel, column, intermediate shaft, or coupling assembly collapse/stroke travel during crash.
2. Relocating the power steering fluid reservoir is not recommended. If the reservoir is moved, care must be taken to ensure that the power steering hoses are not kinked; hoses should have generous radii. Keep the reservoir upright in a vertical position while in the process of relocating it to ensure that no air enters the system.
3. If the suspension spacers are used between the spring and axle seats to accommodate side-to-side variations, they should not exceed 3/4 inch. Addition of spacers is not covered under warranty.

DRIVELINE

1. No drilling or welding to the front axle "I" beam is permissible. Special equipment mounting or attaching brackets, requiring attachment to the front axle, may be clamped to axle "I" beam only.

TRANSMISSION

1. Transmission components are sensitive to ambient temperatures. Underbody ventilation is critical and temperatures in specific areas should not exceed those listed in the Table (see Cooling) on the next page.
2. 4R100 wire harness routing location, wire harness locating clips, all heat shielding, and minimum clearance to the exhaust must be maintained as installed from the assembly plant. Failure to maintain minimum clearances may result in heat damage to the wiring, assembly and loss of transmission controls.
3. For the motor home equipped with automatic transmissions, it is mandatory that the shift linkage be readjusted after linkage repair, engine mount replacement or shimming, steering column replacement or repositioning, transmission replacement, or any repair which could change the linkage adjustment.

WHEELS AND TIRES

1. The 245/70Rx19.5F (18,000 lb, 20,500 lb and 22,000 lb GVWR) and the 225/70Rx10.5F (15,700 lb GVWR) are the only tires approved for the F-Super Duty Class A Motor Home Chassis (F53).

F-SUPER DUTY CLASS A MOTOR HOME CHASSIS (F53) BODY AND SPECIAL EQUIPMENT INSTALLATION PRECAUTIONS (Continued)

COOLING

Refer also to Design Recommendations: Cooling.

1. Cooling inlet area revisions (grille, bumper slots, etc.) must not significantly alter air flow and should be free from blockage such as spare tires, added brackets, etc. Restricted air flow can result in possible engine damage for which the installer may be held liable, should any claims arise.
2. A minimum frontal grille opening of 370 square inches is required to provide satisfactory engine cooling. The grille opening should be directly in front of the radiator or ducted in such a manner to direct airflow through the radiator core.
3. Engine and Automatic Transmission temperatures may be affected by motor home front-end design. Component temperature limitations should not be exceeded (See table below).

F-SUPER DUTY
CLASS A MOTOR HOME CHASSIS (F53)
MAXIMUM ALLOWABLE
COMPONENT TEMPERATURE

Components	Temperature
Fuel Rails/Pressure Regulator	200F
Engine Ignition Sensors	250F
EEC Module (mounted behind pedals)	175F
Auto Transmission Sensors	250F
Lower Transmission Area (mounts, gaskets, etc.)	250F

NOTE: Use only Ford Factory Coolers/Heat Exchangers.

EXHAUST

1. Any changes to the existing exhaust pipe length should be accomplished by welding or use of 3/8 inch U-bolt. Pipe added to the exhaust outlet must be of 0.053 inch minimum wall thickness. Extending the outlet pipe 10 inches or more requires an additional support bracket of a type similar to those provided with the original chassis.
   WARNING: It is mandatory that the side outlet tailpipe configuration be retained when any modification is made to the exhaust system, to reduce the possibility of exhaust fume entry through rear openings. The pipe outlet should not be located near any vent, window, door or body opening. The tailpipe or attenuator of any modified system should be above the departure angle of the finished vehicle.
2. Do not remove, reposition, or otherwise modify any existing OEM chassis or exhaust mounted heat shielding. These shields are there to ensure heat protection from underbody components as well as occupant comfort. Changes in the exhaust pipe length should be accompanied by a similar lengthening of the heat shielding where it exists. Additional underbody heat shielding is required to be installed by the builder as specified in the *QVM Motor Home and Transit Bus Guide*.

FUEL SYSTEM

1. The fuel tank for the motor home chassis is located between the frame rails aft of the rear axle, and is supported by straps and frame crossmembers. The body builder should consider skid plates or protective bars if the body structure does not adequately protect the lower and rear surfaces of the tank.
   WARNING: The five-gallon throwaway fuel tank used on the motor home chassis is for temporary use only during transit shipping, and is to be discarded by body builder. Minimum 10-gallon fuel fill on initial fill of aft-of-axle fuel tank to dilute anticorrosion solution.
2. Avoid relocating fuel tanks. Relocated fuel tanks must meet FMVSS requirements. Use torque specifications and controls for reinstalling tanks (refer to service manual).
   - To avoid electrical sparking at tank, disconnect the battery ground cable(s) from the vehicle battery(ies) before removing tank.
   - Fuel tank clearance to body or frame components is 0.75 inches minimum. The size of any flexible body mounts must not be considered as part of this clearance.
   - Suspension components must clear the fuel tank by 2.00 inches minimum through their functional geometry.
   - Unfriendly surfaces by fuel tanks are unacceptable (i.e., any fastener used to install back-up alarm, seats, etc., to floor or chassis components must not point toward fuel tank).
   - Revisions and welding to fuel filler pipes, filler necks and tanks must be avoided. When welding in the vicinity of the system (especially gasoline) remove the tanks and fuel components to prevent accidents.
   - When removing tanks for processing, tanks should be stored where protected and caps should be installed on all openings. Dirt/dust will plug fuel filters and could result in engine damage.
   - Reinstallation of fuel sender units always requires a new gasket (fastener torque of 85-115 in-lb is specified).
   - Auxiliary generator systems that are installed with their own fuel supply, or with a fuel supply provided by means other than using the tank auxiliary port, must meet FMVSS requirements.
   - Tapping into fuel tanks for an extra fuel source is highly undesirable and FMVSS certification is required. An auxiliary fuel port is available on the motor home chassis in-tank sender unit assembly.

   A fuel filler kit is provided with the Class A Motorhome Chassis. This filler kit is installed and tested in a representative motorhome to verify that it is capable of providing acceptable fuel fill function without spray, spitback or premature shutoff. However, Ford has no control over how the filler pipe and vent line are installed or modified by the Vehicle Modifier. Consequently, the Vehicle Modifier must ensure that the fuel filler pipe and any extensions added to the fill or vent lines are adequately supported to prevent sagging that could cause spray, spitback or premature shutoff during normal fueling operations. The Final Stage Manufacturer is responsible for verifying acceptable fuel fill function on the completed vehicle.

   The recommended horizontal and vertical location for fuel tank filler pipe is shown on page 181 of this section.
3. Fuel filler and vent hoses must not be exposed to sharp corners and should have a minimum of 1.00 inch clearance to the body and surrounding body and chassis components (except frame). If fuel filler hoses are in the vicinity of edges or corners, then shield/abrasion protection should be used. Sink traps (low spots in fuel filler and/or vent hose) are unacceptable. The recommended horizontal and vertical location for the fuel tank filler pipe is shown on page 181 of this section.
   Lengthening/relocating the fuel filler pipe can only be done with the hose supplied in the dunnage box and steel tube provided by the body builder. No substitute hose material is allowed. Total length of the hose used in the system cannot exceed that of the original hose supplied in the dunnage box. Failure to comply may void the evaporative emissions certification.
   - If fuel hoses or vent hoses are replaced, the new hoses must meet Ford Engineering specifications. ESL-M2D291-A2 torque specifications should be used for hose clamps (25 to 35 in-lb).
   - Extra connections in the fuel filler hose or vent hose, caused by the use of extensions, should be avoided.
   - Use only the Ford-specified fuel cap. Caps other than the Ford original (such as aftermarket locking gas caps) are unacceptable.
4. Splicing of fuel lines with clamps and rubber hoses is unacceptable.
   NOTE: Motor Home Chassis have P.T.F.E. nylon fuel lines.
   In-line fuel heaters (used on diesel only) should be compatible with Ford fuel line fittings (including nylon lines).
   When drilling or welding in areas where there are fuel or vapor lines, the lines should be removed
   Bolts installed into the chassis near fuel/vapor lines should have protective caps or other means of protection for the lines.
   Kinking or collapsing of fuel or vapor lines, while handling or after installation, is unacceptable. If line has been kinked, it must be replaced.
   If carbon canisters are relocated:
   - Heat shields should be added if they are located in the vicinity of the catalyst and/or muffler.
   - No additional hose can be added to the canister purge lines. Lengthening of the system can only be accomplished by replacing one or more of the steel tubes with a longer tube. The number of joints and length of hose in the system cannot be increased. If any of the hose is damaged, it must be replaced with CADBAR II low permiability hose meeting Ford Engineering Specification ESA-M2D50-B. Failure to comply may void the evaporative emissions certification.
   - Fastener torque specs are 14 to 22 ft-lb for remounting of canister brackets to frame.

   Avoid routing of fuel or vapor lines near any sharp edges or corners. Protect lines if near any sharp edges or corners.
   Do not add auxiliary filters to fuel return lines or auxiliary pumps to fuel supply lines.

ELECTRICAL

All wiring additions and revisions should comply with procedures described in the “Electrical Wiring, General Practices” on Appendix page 204.

NOTE: Refer to the table on page 188 for identification of chassis wiring circuits, and tagged circuit splice locations. After all electrical or vehicle modifications, perform the on-board diagnostics procedures as described in the powertrain control/emissions diagnosis manual to clear all diagnostic trouble codes (DTCs). Road test vehicle and rerun on-board diagnostics to verify that no DTCs are present. If DTCs are generated, perform the appropriate diagnostic procedures and repairs. Vehicle operation (engine/transmission) may be affected if DTCs are not serviced.

F-SUPER DUTY CLASS A MOTOR HOME CHASSIS (F53) BODY AND SPECIAL EQUIPMENT INSTALLATION PRECAUTIONS (Continued)

1. ADDING LIGHT OR ELECTRICAL DEVICES

Although there are many points in the truck electrical system to connect additional circuits, certain connection points provided are recommended for reliability and convenience. This section defines the recommended connection points for the F-Super Duty Class A Motor Home Chassis (F53) models and the maximum electrical loads allowable.

CAUTION: Improper electrical tie-ins may affect vehicle operation (i.e., engine, transmission).

Alternative connections or wiring practices are not recommended as certain modifications may result in other circuits becoming nonfunctional. Disconnect the battery negative (ground) cable and remove it from the battery carrier prior to any vehicle modification. Upon completion of body or equipment installation, all wiring should be checked fro proper routing, etc., to preclude electrical shorts upon reinstallation of the battery negative cable.

All electrical power for 12 volt equipment installed by the body builder must be taken off at the battery terminal of the auxiliary battery relay, starter relay, or locations provided and identified later in this book, and must be protected by a fuse, circuit breaker, or fusible link.

The vehicle wiring and protection were designed for the following lighting loads - additional loads to any circuit must be installed in accordance with the detailed electrical wiring instructions provided later in this book

.

Qty	Components	Trade No.
2	Halogen Headlamp Bulbs	9004
10	Combination Rear Lamp (tail, brake, turn signal) Bulbs	1157
2	Back-up Lamps	1156
4	Side Marker Bulbs	194
2	License Plate Illumination Bulbs	194
2	Interior Dome Bulb	561
	Bulbs for Instrument Cluster Illumination	
16	Small Bulb	37
5	Large Bulb	194

2. LIGHTS CONTROLLED BY HEADLAMP SWITCH

The headlamp switch on the F-Super Duty Class A Motor Home Chassis (F53) utilizes one 20 amp fuse for the headlamp high beam circuit and two 10 amp fuses for low beam. The vehicle contains a standard daytime running lamp system which operates using low beam/ reduced intensity.

NOTE: Do not add marker lamps to the headlamp circuit; a separate circuit is provided for the marker lamps. Adding the marker lamps to the headlamp circuit can result in an overload of the circuit. For full service temperature range, the headlamp switch load should not exceed 15 amp.

Wiring access for lights to be controlled by the headlamp switch are provided at the front of the dash panel and at the rear of the vehicle, and are identified by tags attached to these wires.

Splices and electrical loading (fusing and wire size requirements) of these circuits must be in accordance with general practices previously identified.

3. LIGHTS CONTROLLED BY STOP LAMP SWITCH AND TURN INDICATOR SWITCH

NOTE: Splicing into the stop lamp switch on vehicles with 4R100 transmissions can interfere with the proper functioning of EEC, 4R100, and speed control. This can:

- Affect EFI engine idle speed quality.
- Prevent the 4R100 torque converter clutch from applying at throttle openings less than half throttle.
- Prevent the speed control from disengaging upon braking.

If your application involves splicing into the stop lamp switch of a 4R100-equipped vehicle, please call the Truck Body Builders Advisory Service at 1-877-840-4338.

The F-Super Duty Class A Motor Home Chassis (F53) has a mechanical stop lamp switch mounted on the brake pedal arm. These switches and associated wiring are designed for a maximum load of 10.5 amp, which is less than the fuse in the circuit, but ample for normal stop lamp loads. Under no circumstances are total loads in excess of this value permissible.

If only turn signal function is desired for the added lights, splice into the taillamp loom located at the rear of the vehicle. Splice into wires tagged “RH turn signal only ‘or’ LH turn signal only.”

If both the turn signal and stop lamp function are desired for the added lights, splice into the taillamp loom at the rear of the vehicle into wires tagged, “RH turn w/brake ‘and’ LH turn w/brake.”

NOTE: The turn signal switch used on light trucks has a maximum rated current of 6.5 amps for right and left turning functions and 10 amps for stop lamp function. Do not exceed these values on the turn signals.

The turn signal and emergency flasher system on the F-Super Duty Class A Motor Home Chassis (F53) utilizes an electronic flasher. For the turn signal function, the electronic flasher is designed to accommodate five 2.1 amp lights; and for the emergency flasher function, it is designed to accommodate ten 2.1 amp lights for combination stop/turn and trailer lamps.

NOTE: Adding more lights than what is specified above can result in reduced life and performance of the flasher.

4. ADDED LIGHT OR ACCESSORIES CONTROLLED BY ADDED SWITCHES

The added electrical switches and wiring must have sufficient electrical capacity for the accessory load and must be protected by appropriate fuses or circuit breakers. Also, added current draw must not cause total loads to exceed capabilities of the base vehicle wiring.

State, provincial, local laws may regulate the manner in which the fog and driving lamps are used, or may require additional equipment for the particular use intended for the vehicle. It is the buyer’s/owner’s responsibility to determine the applicability of such laws to the buyer’s/owner’s intended use for the vehicle and to arrange for the installation of required equipment.

When horns are installed, the location must be as high as possible with bell mouth of horn pointed downward.

NOTE: For additional information on Electrical/Trailer Tow wiring and devices, please refer to the *Body Builder Wiring Supplement.*

5. BATTERIES AND VOLTAGE REGULATOR

The battery location must be adequately ventilated, accessible for servicing, protected from road splash, and must also incorporate a shockless mounting.

The coach or chassis battery must not be located under the air cleaner inlet to prevent ingesting any gas that may be emitted from the battery.

If the original equipment battery is replace by more than one battery, or a battery of a larger capacity, the battery charging power supply circuit must be checked and revised to carry the additional loads.

F-Super Duty Class A Motor Home Chassis (F53) has a separate wire to the EEC IV module to maintain Keep Alive Power, and is not affected by the addition of a battery cut-off switch.

The electronic voltage regulator base must always be connected to the battery, engine chassis ground when the ignition switch is in either the ON or START position. The voltage regulator will be damaged if the connection does not exist when the ignition switch is energized.

ELECTRONICS

Refer to the Electrical Wiring Section for information on the Electronic Engine Control system.

A/C PREP PACKAGE

1. The F-Super Duty Class A Motor Home Chassis (F53) comes with an R134a (non-CFC) air conditioning prep package for use with a TXV controlled a/c system. This package consists of a compressor, condenser, high side lines with high pressure switch air recirculation baffles, and front end accessory drive which are mounted to the chassis, and a receiver/dryer with low pressure cutoff switch that is shipped in the dunnage box and is located by the body builder.
2. Information on air conditioning refrigerant and lubricant quantities are shown in the *Motor Home and Transit Bus Guide.*

F-SUPER DUTY CLASS A MOTOR HOME CHASSIS (F53) BODY AND SPECIAL EQUIPMENT INSTALLATION PRECAUTIONS (Continued)

Circuit	Circuit #	Gauge	Color	Location	Fuse Loc	Fuse Size
• Accessory Feed (Accy's & Run)	296	18	White-Purple Stripe	Top Side of Dash Panel (Part of 14A318-A w/Assy)	F/P Pos. #5	10A
• Accessory Feed (Run Only)	294	18	White-Lt. Blue	Top Side of Dash Panel (Part of 14A318-A w/Assy)	F/P Pos. #38	10A
• A/C Switch	441	16	Purple Stripe	Top Side of Dash Panel (Part of 14A318-A w/Assy)	—	—
• Backup Lamp	140	18	Black-Pink	Rear of Vehicle (Part of 14408 w/Assy)	F/P #32	10A
• Battery Feed	1049	16	Brown-Pink Stripe	Top Side of Dash Panel (Part of 14A318-A w/Assy)	F/P #16	20A
• Blower Motor Feed	181	10	Brown-Orange Stripe	Top Side of Dash Panel (Part of 14401-A w/Assy)	PDB Fuse 23	40A
• Brake Lamp Feeds	511	16	Lt. Green	Top Side of Dash Panel (Part of 14A318-A w/Assy), Front Side of Dash Panel (Part of 14A348 w/Assy) and Rear of Vehicle (Part of 14408 w/Assy)	F/P Pos. #9	20A
• Cigarette Lighter Feed	40	16	Lt. Blue-White Stripe	Top Side of Dash Panel (Part of 14A318-A w/Assy)	PDB Fuse 22	20A
• Interior Lamp Feed (Ground)	402	20	Orange-Lt. Green	(Part of 14A318 w/Assy)	—	—
• Door Ajar Lamp Ground	433	20	Dark Green-Orange	Top Side of Dash Panel (Part of 14A318-A w/Assy)	—	—
• Electric Brake Power	43	12	Dark Blue	Rear of Vehicle (Part of 14408 w/Assy)	PDB Fuse 13	30A
• Ground During Start	41	20	Black-Lt. Blue	Top Side of Dash Panel (Part of 14A318-A w/Assy)	—	—
• Headlamp High Beam Feed	12	16	Lt. Green-Black Stripe	Front Side of Dash Panel (Part of 14290 w/Assy)	F/P #35	20A
• Headlamp Low Beam Feed (Left) (Right)	160 161	18 18	Dark Brown and White Dark Green-Orange	Front Left Side of Dash Panel (Part of 14290 w/Assy) Front Right Side of Dash Panel (Part of 14290 w/Assy)	F/P #31 F/P #25	10A 10A
• Horn Feed	6	16	Yellow-Lt. Green	Front Side of Dash Panel (Part of 14290 w/Assy)	PDB Fuse #18	20A
• Instrument Panel Lamp Feed	19	20	Lt. Blue-Red Stripe	Top Side of Dash Panel (Part of 14A318-A w/Assy)	F/P Pos. #41	10A
• Interior Lamp Feeds	53	18	Black-Lt. Blue	Top Side of Dash Panel (Part of 14A318-A w/Assy) and Rear of Vehicle (Part of 14408 w/Assy)	F/P #4	15A
• LH Turn Signal (Only) Feeds	3	16	Lt. Green-White Stripe	Front Side of Dash Panel (Part of 14290 w/Assy) and Rear of Vehicle (Part of 14408 w/Assy)	F/P Pos. #15	15A
• LH Turn w/Brake Signal Feeds (Turn)	9	16	Lt. Green-Orange	Rear of Vehicle (Part of 14408 w/Assy)	F/P Pos. #1	20A
• Marker Lamp Feeds (Park Lamp)	14 14 14 14 14	16 16 14 16 16	Brown Brown Brown Brown Brown	Front Side of Dash Panel (Part of 14290 w/Assy) Front Side of Dash Panel (Part of 14A38 w/Assy) Top Side of Dash Panel (Part of 14A318-A w/Assy) Middle of Vehicle (Part of 14405 w/Assy) Rear of Vehicle (Part of 14408 w/Assy)	PDB #6	20A
• Park Brake Ground	162	20	Lt. Green-Red	Top Side of Dash Panel (Part of 14A318-A w/Assy)	—	—
• Radio Feed	137	18	Yellow-Black Stripe	Top Side of Dash Panel (Part of 14A318-A w/Assy)	F/P Pos. #17	5A
• RH Turn Signal (Only) Feeds	2	16	White-Lt. Blue	Front Side of Dash Panel (Part of 14290 w/Assy) and Rear of Vehicle (Part of 14408 w/Assy)	F/P Pos. #21	15A

NOTES — 14A032, 14A318, 17B587, 14408, 13A840, AND 18A586 WIRE ASSYS ARE PROVIDED IN DUNNAGE BOX.
FUSE PANEL (F/P) IS LOCATED ON 14A032-A WIRE HARNESS PROVIDED IN DUNNAGE BOX.
POWER NETWORK BOX (PNB) IS LOCATED ON 12A581 WIRE HARNESS LOCATED IN ENGINE COMPARTMENT.

F-SUPER DUTY CLASS A MOTOR HOME CHASSIS (F53) BODY AND SPECIAL EQUIPMENT INSTALLATION PRECAUTIONS (Continued)

Circuit	Circuit #	Gauge	Color	Location	Fuse Loc	Fuse Size
• RH Turn w/Brake Signal Feeds (Turn)	5	16	Orange-Lt. Blue	Rear of Vehicle (Part of 14408 w/Assy)	F/P Pos. #1	20A
• LH Turn w/Brake Signal Feed (Brake)	9	16	Lt. Green-Orange	Rear of Vehicle (Part of 14408 w/Assy)	F/P #9	20A
• RH Turn w/Brake Signal Feed (Brake)	5	16	Orange-Lt. Blue	Rear of Vehicle (Part of 14408 w/Assy)	F/P #9	20A
• Electric Brake Controller	50	12	Red	Front Side of Dash Panel (Part of 14A348 w/Assy)	PDB #13	30A
• Electric Brake Ground	206	14	White	Front Side of Dash Panel (Part of 14A348 w/Assy)	—	—
• Trailer Backup Lamp	963	16	Black-Lt. Green	Top Side of Dash Panel (Part of 14A318 w/Assy) and Rear of Vehicle (Part of 14408 w/Assy)	PDB #12	20A
• Trailer Ground	206	10	White	Rear of Vehicle (Part of 14408 w/Assy)	—	—
• Trailer LH Turn/Stop Lamp	52	16	Yellow	Rear of Vehicle (Part of 14408 w/Assy)	F/P #6	10A
• Trailer RH Turn/Stop Lamp	64	16	Dark Green	Rear of Vehicle (Part of 14408 w/Assy)	F/P #12	10A
• Trailer Running Lamps	962	16	Brown-White	Rear of Vehicle (Part of 14408 w/Assy)	PDB #12	20A
• Warning Chime — Door Jam	159	20	Red-Pink Stripe	Top Side of Dash Panel (Part of 14A318-A w/Assy)	—	—
• Warning Chime — Seat Belt	85	20	Brown-Lt. Blue Stripe	Top Side of Dash Panel (Part of 14A318-A w/Assy)	—	—
• Washer Pump Feed	941	14	Black-White Stripe	Front Side of Dash Panel (Part of 17B587 w/Assy)	F/P Pos. #11	30A
• Wiper Motor Feed — Common	61	14	Yellow-Red Stripe			
• Wiper Motor Feed — High	58	14	White			
• Wiper Motor Feed — Ignition	65	14	Drk. Green			
• Wiper Motor Feed — Low	56	14	Drk. Blue-Orange Stripe			
• Wiper Motor Feed — Switch	28	14	Black-Pink Stripe			

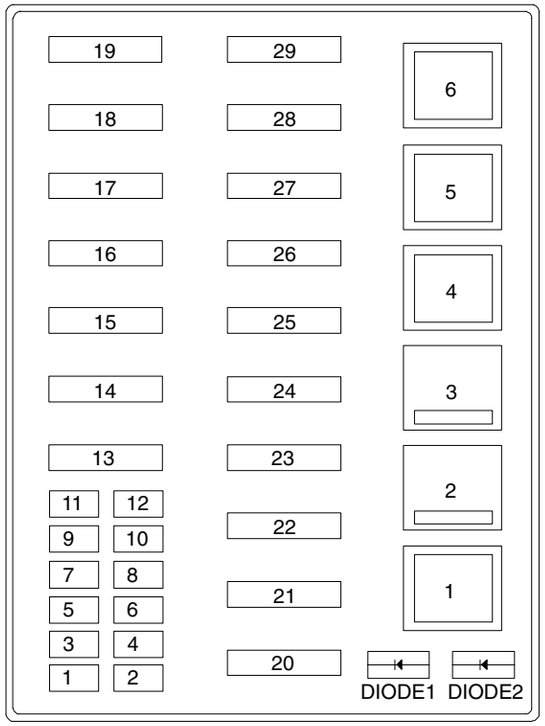

POWER DISTRIBUTION BOX

BB0543

NOTES: 14A032, 14A318, 17B587, 14408, 13A840, AND 18A586 WIRE ASSY'S ARE PROVIDED IN DUNNAGE BOX.
FUSE PANEL (F/P) IS LOCATED ON 14A032-A WIRE HARNESS PROVIDED IN DUNNAGE BOX.
POWER NETWORK BOX (PNB) IS LOCATED ON 12A581 WIRE HARNESS LOCATED IN ENGINE COMPARTMENT.

	15,700 lb		18,000 lb		20,500 lb		22,000 lb	
	FRONT	REAR	FRONT	REAR	FRONT	REAR	FRONT	REAR
GAWR	6000	11,000	7000	11,000	7000	13,500	7500	14,500
AXLE	7000	11,000	7000	11,000	7000	13,500	7500	14,500
TIRES, 245/70R19.5 (@ 80 PSI)	*	*	7660	14,620	7660	14,620	8160(1)	15,500(1)
TIRES, 225/70R19.5 (@ 80 PSI)	6390	12,000	*	*	*	*	*	*
SPRINGS, COMBINED AT GROUND	7000	11,000	7000	11,000	7000	13,500	7500	14,500
NUMBER OF LEAVES	2	3	2	3	2	3	2	3
WHEELS, 19.5 X 6	RATED 3750 PER WHEEL		*	*	*	*	*	*
WHEELS, 19.5 X 6.75	*	*	RATED 4000 PER WHEEL					

* Not Applicable
(1) @ 85 PSI

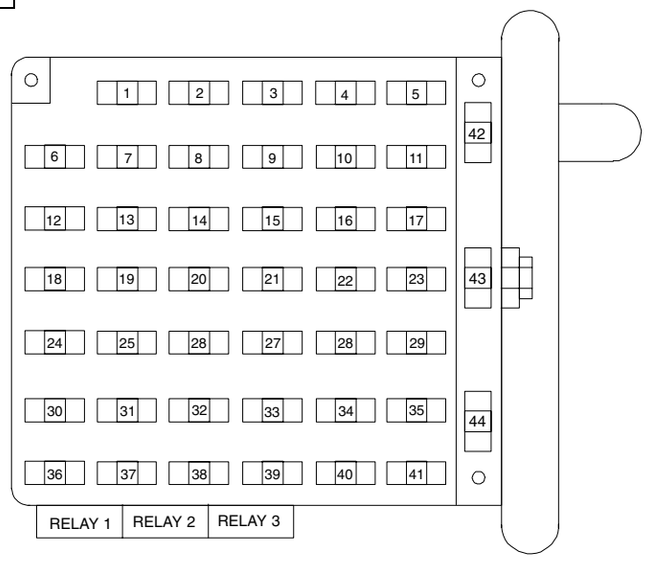

FUSE PANEL

F-150 4X4 SNOWPLOW INSTALLATION MINIMUM REQUIRED AND RECOMMENDED EQUIPMENT

NOTE: Ranger is not recommended for snowplow usage.

The following F-150 models are available for snowplow usage.

F-150 4x4 REGULAR CAB & SUPERCAB

138.8" WB Model

- 7700 Payload Group (V8) (Option Code 627)

  Includes:

  — GVWR – 7700 lb

  — Powertrain – 5.4L engine with 4-speed automatic overdrive transmission and 3.73 axle ratio (when snowplowing, operate automatic transmission in overdrive)

  — GAWR/torsion bars, front – 4150 lb

  — Upgraded radiator (1.42 inch core thickness)

  — Battery, 72 amp hr/650 CCA

  — Auxiliary transmission oil cooler (14-plate)

  — LT245/75RX16D OWL all-terrain tires (all five tires)

  — 16" x 7" J Argent styled steel wheels (7-hole disc) (chrome styled steel with XLT and Lariat)

  — Other heavy duty components – frame (4.00 cu. in. section modulus), shock absorbers (1.38" diameter), jack (2 ton), rear axle (5300 lb capacity), rear springs/GAWR (4800 lb)

- Permanently attached hardware must not exceed 50 lb and the removable snowplow hardware must not exceed 650 lb with consideration for the driver and one front seat passenger.
- These weight limits are based upon a vehicle with maximum buildable Ford option content and 150 lb each for the driver and one front seat passenger.

Completed Vehicle Weight

The weight of the completed vehicle with equipment installed (and second unit body, if applicable) must not exceed the Front GAWR, Rear GAWR, or GVWR established by Ford. If sufficient weight is added such that the completed vehicle with a driver and more than one passenger would exceed Front GAWR, Rear GAWR, or GVWR, it is the responsibility of the equipment installer to notify the customer of the appropriate use restrictions. (i.e., That the user should limit occupancy of the vehicle to the driver and one passenger while the equipment is installed.)

The addition of ballast weight, placed rearward of the rear axle, may be required to prevent front end overloading or exceeding Front GAWR. If required, the ballast weight must be securely attached to the vehicle.

For Ford completed vehicles of 10,000 GVWR or less, the weight of permanently attached equipment must not exceed the Total Accessory Reserve Capacity (T.A.R.C.) as specified on the Safety Compliance Certification Label. Permanently attached equipment includes the snowplow frame-mounting hardware, and does not include the removable snowplow blade assembly. Exceeding T.A.R.C. will require recertification.

Front End Wheel Alignment and Headlight Aim

Front end wheel alignment (toe) and headlight aim may require readjustment after installation of equipment, and is the responsibility of the equipment installer. Failure to reset front wheel alignment may cause premature uneven tire wear. If required, reset to chassis manufacturer's specifications found in the *Ford Shop Manual*.

Electrical Connections

Installation of any inductive load devices (i.e., electric motors, electric clutches for clutch pumps, etc.) **must not** be connected to OEM wiring or fuse panels. Power for such devices should be taken directly from the battery or starter motor relay power terminal. Control of these devices should be achieved via relays. No direct current path should exist between OEM wiring and the installed load that is not filtered by the battery. These recommendations are intended to reduce or eliminate any induced reverse voltage into the OEM circuitry.

Warranty

The Normal Ford New Vehicle Limited Warranty applies to vehicles with snowplows installed in accordance with these guidelines. Consult your Ford dealer or the *Owner's Guide* for any further questions.

SUPER DUTY F-250-550 4X4 SNOWPLOW INSTALLATION MINIMUM REQUIRED AND RECOMMENDED EQUIPMENT

The Super Duty F-Series vehicles tabled below are available for snowplow usage.

Minimum Required Equipment

- Snowplow Package (Option Code 86M), includes:
  - — Highest Front GAWR (5200 lb for F-250/350; 6000 lb for F-450/550)
  - — Auxiliary Rear Springs with 5.4L V-8 engine – late availability
  - — Steering damper (F-250/350)
- Plow and attaching hardware weight limits as tabled below.

Recommended Equipment (not required)

- All terrain tires
- Optional roof clearance lights with SRW Pickup models.

Standard Equipment

- Front stabilizer bar.
- Rear stabilizer bar (standard Chassis Cab and DRW pickup models).
- Roof clearance lights (standard Chassis Cab and DRW pickup models).
- Engine oil cooler, transmission oil cooler, and maximum capacity engine coolant radiator are standard on Super Duty F-Series.
- All available axle ratios are acceptable.
- Available with manual and automatic transmission. Operate automatic transmission in overdrive when snowplowing

Completed Vehicle Weight

The weight of the completed vehicle with equipment installed (and second unit body, if applicable) must not exceed the Front GAWR, Rear GAWR, or GVWR established by Ford, with consideration for the driver and one front seat passenger. If sufficient weight is added, such that the completed vehicle with a driver and more than one passenger would exceed Front GAWR, Rear GAWR, or GVWR, it is the responsibility of the equipment installer to notify the customer of the appropriate use restrictions. (i.e., That the user should limit occupancy of the vehicle to the driver and one passenger while the equipment is installed.

Completed Vehicle Weight (Continued)

The addition of ballast weight, place rearward of the rear axle, may be required to prevent front end overloading or exceeding Front GAWR. If required, the ballast weight must be securely attached to the vehicle.

For Ford completed vehicles of 10,000 lb GVWR or less, the weight of permanently attached equipment must not exceed the Total Accessory Reserve Capacity (T.A.R.C.) as specified on the Safety Compliance Certification label. Permanently attached equipment includes the snowplow frame-mounting hardware, and does not include the removable snowplow blade assembly. Exceeding T.A.R.C. will require recertification.

Front End Wheel Alignment and Headlight Aim

Front end wheel alignment (toe) and headlight aim may require readjustment after installation of equipment, and is the responsibility of the equipment installer. Failure to reset front wheel alignment may cause premature uneven tire wear. If required, reset to chassis manufacturer's specifications found in the *Ford Shop Manual*.

Electrical Connections

Installation of any inductive load devices (i.e., electric motors, electric clutches for clutch pumps, etc.) **must not** be connected to OEM wiring or fuse panels. Power for such devices should be taken directly from the battery or starter motor relay power terminal. Control of these devices should be achieved via relays. No direct current path should exist between OEM wiring and the installed load that is not filtered by the battery. These recommendations are intended to reduce or eliminate any induced reverse voltage into the OEM circuitry.

Warranty

The normal Ford New Vehicle Limited Warranty applies to vehicles with snowplows installed in accordance with these guidelines. Consult your Ford dealer or the *Owner's Guide* for any further questions.

BlockerBeam

A metal crossmember is included below the front bumper on 2003 Super Duty F250/350/450/550 vehicles called a "BlockerBeam".

Warning: Removing the BlockerBeam without installing snowplow attachment hardware may effect air bag deployment in a crash. Do not operate the truck unless either the BlockerBeam or snowplow attachment hardware is installed on the vehicle.

4x4 Pickup(1) w/Driver and One Passenger			Models	
			F250(2)	F350(2)
Regular Cab	137.0"	5.4L V8	100/750	100/750
		6.8L V10	100/750	100/750
		7.3L V8 Diesel	100/680	100/680
		6.0L V8 Diesel	100/680	100/680
Super Cab	141.8"	5.4L V8	100/750	100/750
		6.8L V10	100/750	100/750
		7.3L V8 Diesel	N/R(3)	100/680
		6.0L V8 Diesel	N/R(3)	100/680
	158.0"	5.4L V8	100/750	100/750
		6.8L V10	100/750	100/750
		7.3L V8 Diesel	N/R(3)	N/R(3)
		6.0L V8 Diesel	N/R(3)	N/R(3)
Crew Cab	156.2"	5.4L V8	100/750	100/750
		6.8L V10	100/750	100/750
		7.3L V8 Diesel	N/R(3)	N/R(3)
		6.0L V8 Diesel	N/R(3)	N/R(3)
	172.4"	5.4L V8	100/750	100/750
		6.8L V10	100/750	100/750
		7.3L V8 Diesel	N/R(3)	N/R(3)
		6.0L V8 Diesel	N/R(3)	N/R(3)

(1) = Includes Pickups ordered with Pickup Box Delete option.

(2) = 100 / 750 = Maximum 100 lb of permanently-attached hardware / Maximum 750 lb of removable plow blade and hardware. The plow and hardware weight limits shown are based upon a vehicle with maximum buildable Ford option content and 150 lb for the driver and one front seat passenger.

(3) = Not recommended for snowplow application; Snowplow Package (option code 86M) not available. A model designated "N/R" is limited in the amount of load capacity available to support a typical "commercial-weight" snowplow, or would require excessive rear ballast weight.

4x4 Chassis Cab Driver and One Passenger			Models		
			F350(2)	F450(2)	F550(2)
Regular Cab	140.8" WB 60" CA	5.4L V8	100 / 750		
		6.8L V10	100 / 750	125/900	125/900
		7.3L V8 Diesel	100 / 750	125/900	125/900
		6.0L V8 Diesel	100 / 750	125/900	125/900
	164.8" WB 84" CA	5.4L V8	100 / 750		
		6.8L V10	100 / 750	125/900	125/900
		7.3L V8 Diesel	100 / 750	125/900	125/900
		6.0L V8 Diesel	100 / 750	125/900	125/900
	188.8" WB 108" CA	6.8L V10		125/900	125/900
		7.3L V8 Diesel		125/900	125/900
		6.0L V8 Diesel		125/900	125/900
	200.8" WB 120" CA	6.8L V10		125/900	125/900
		7.3L V8 Diesel		125/900	125/900
		6.0L V8 Diesel		125/900	125/900
Super Cab	161.8" WB 60" CA	5.4L V8	100 / 750		
		6.8L V10	100 / 750	125/900	125/900
		7.3L V8 Diesel	100 / 750	125/900	125/900
		6.0L V8 Diesel	100 / 750	125/900	125/900
Crew Cab	176.2" WB 60" CA	5.4L V8	100 / 750		
		6.8L V10	100 / 750	125/900	125/900
		7.3L V8 Diesel	N/R(3)	125/900	125/900
		6.0L V8 Diesel	N/R(3)	125/900	125/900
	200.2" WB 84" CA	6.8L V10		125/900	125/900
		7.3L V8 Diesel		100 / 750	100 / 750
		6.0L V8 Diesel		100 / 750	100 / 750

NOTE: 6.0L V-8 Diesel (late availability)

SUPER DUTY F-SERIES TRACTOR FIFTH WHEEL RECOMMENDED MOUNTING PROCEDURE

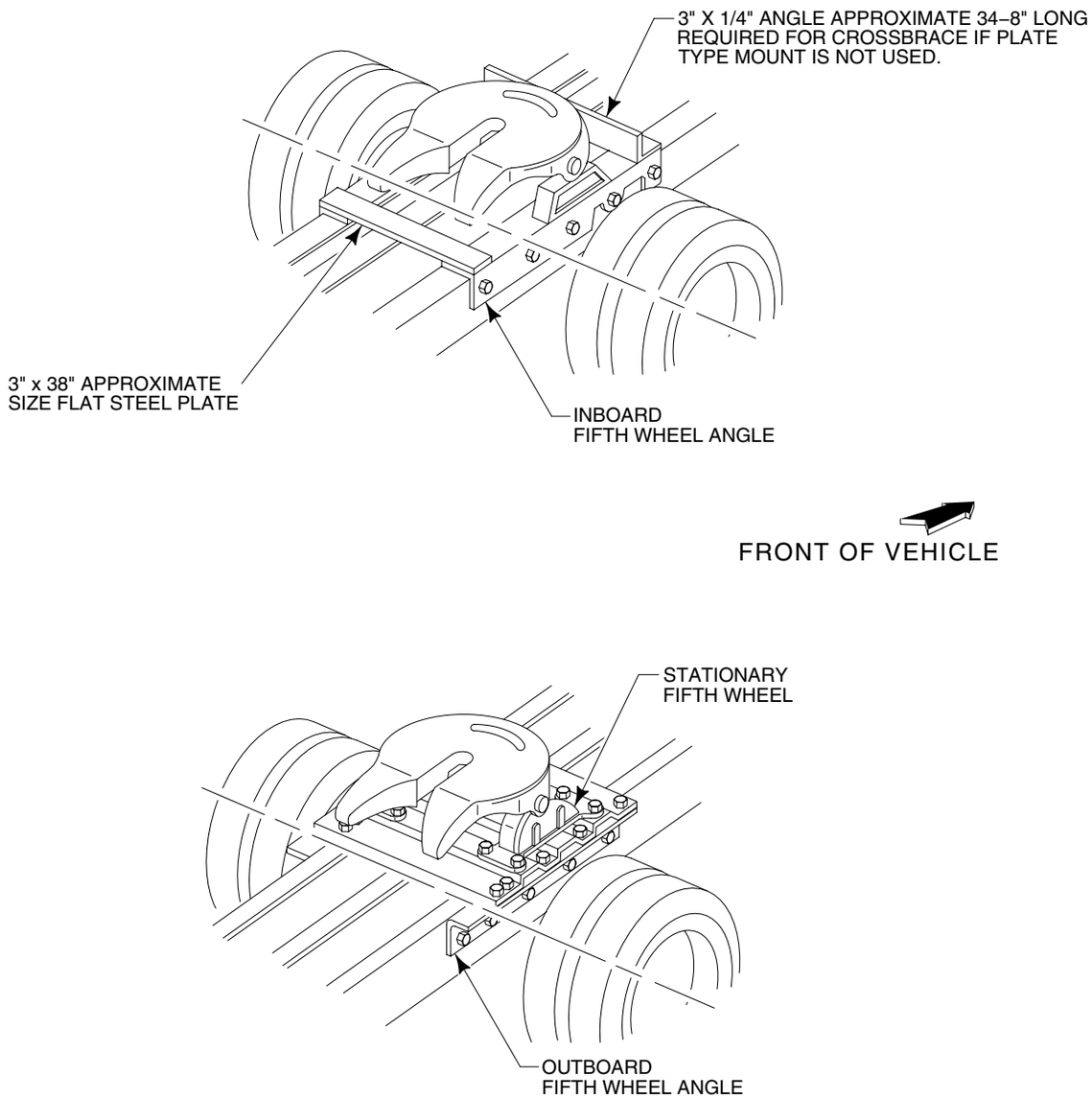

ATTACHMENT

Following are recommendations for mounting typical fifth wheels to Ford trucks:

- **Fifth Wheel Mounting Angles**
  - — Inboard angles must have a minimum horizontal leg of 4 inches and a minimum vertical leg of 3-1/2 inches.
  - — Outboard angles must have a minimum horizontal leg of 3 inches and a minimum vertical leg of 3-1/2 inches.
  - — Mounting angles should extend a minimum of 18 inches forward and not less than 12 inches rearward of the fifth wheel's pivot point.
  - — Fixed fifth wheels: Angles should have a minimum length of 36 inches.
  - — Sliding fifth wheels: Angles should be at least 1 inch longer in front of and behind the fifth wheel's slide plate and have a minimum length of 36 inches.
  - — Minimum thickness of 5/16.
  - — Steel specification ASTM A-36.
  - — Cutouts to facilitate suspension components require a one inch minimum radius and fastener placement of 1-1/2 inches from edge of cut, fore and aft.
  - — Primed and painted before installation on aluminum side rails.
- **Mounting Bolts / Holes**
  - — Grade 8, 5/8 inch minimum fasteners or equivalent substitute with prevailing torque nuts.
  - — Bolt holes can be 1/32 inch larger in diameter than bolt fastener and must be a minimum of 2 inches from inside of upper flange to centerline of hole and a minimum of 1 inch up from the bottom of the angle to centerline of hole.
  - — Hardened steel washers are to be employed under both the bolt and locknut unless flanged head bolts, flanged head locknuts or Huck fasteners are used.
  - — A minimum of five bolts per mounted angle spaced a minimum of 4 inches apart and a maximum of 8 inches apart (except at spring hanger bracket, attaching components or frame assembly attaching parts).
- **Mounting Considerations / Precautions**
  - — Any gap between the top flange of the frame and mounting angle must be filled with a spacer of a suitable durable material (such as steel or aluminum).
  - — Fifth wheel kingpin offset forward of the centerline of axle or bogie should be 24 inches or less. Warning, no kingpin offset rearward of the centerline of axle is acceptable. Locating the kingpin rearward of the axle centerline may cause improper load distribution and loss of steering control.
  - — Care must be taken to avoid interference or contact between fifth wheel and air brake components when rear of fifth wheel is depressed. In order to prevent this, it is recommended that a stop be attached to the underside of the rear extension of the fifth wheel mounting plate.
  - — To prevent fretting the ends of the mounting angles that contact the top frame, flange should be radiused.
- **Prohibited Procedures**
  - — Welding mounting angles to side rails or welding any structure or component to angles after the angles are positioned on frame side rails.
  - — Mounting fifth wheels directly to frame sidemembers.
  - — Mutilating sidemembers and crossmembers.
  - — Attaching stop blocks directly to frame sidemembers.
  - — The use of U-bolts for attaching mounting angles.

THE VEHICLE AS AN AUXILIARY OR STATIONARY POWER SOURCE

Ford trucks are designed principally to provide vehicle motivation and short term auxiliary power needs. Power activation of hydraulic or mechanically driven devices such as wrecker lift, snowplow blade lift and movement, power tailgate lift, or dump body lift, are a few examples. The variety of factors such as air circulation available, temperature environment, vehicle maintenance level, and other existing conditions, combined with the range of auxiliary horsepower and torque demands that may be placed upon a vehicle in power take-off usage, make it difficult to assess the ultimate performance of a vehicle subjected to extended duration usage as an auxiliary power source. The guidelines in this book are intended to assist the PTO equipment installer in avoiding inadvertent vehicle performance and safety concerns. These guidelines should not be considered all inclusive, and it is the responsibility of the PTO equipment installer to choose and install a PTO system that the vehicle operators will be able to use in a safe manner with the necessary precautions to ensure safe operation and customer satisfaction.

TRANSMISSION POWER TAKE-OFF PROVISION

This is a regular production option, code 62R, and must be ordered separately to obtain an automatic transmission with PTO capability. It is available for Super Duty F-Series automatic transmission only, 6.8L gas engine, or 7.3L or 6.0L diesel engines. The 6.0L diesel engine with TorqShift 5-speed automatic transmission replaces the 7.3L diesel engine with 4R100 automatic transmission in November 2002. The M6 6-speed manual transmission has a LH-side PTO port and does not require a PTO-Provision option. The following chart shows what is included with the PTO-Provision versus an automatic transmission vehicle without the option.

PTO versus NON-PTO Transmission	Non-PTO	4R100	Torqshift
Option Code	None	62R	
PTO Drive Gear	None	Included	
PTO Opening	None	LH side, non-standard 60bolt pattern	
Controlled Compression Gasket	None	Included	
Transmission Shift Cable & Bracket	Standard	Unique	Standard
Diesel Engine PCM	All diesel engine PCM's are PTO-capable		
Under-dash PTO wiring	Two circuits, 12-volt power and PTO signal to PCM, included.		

PCM: Powertrain Control Module (previously called ECC or Engine Control Module)

The following chart characterizes the differences between PTO-capable automatic transmissions.

4R100 versus TorqShift Transmission	4R100	TorqShift
Transmission Fluid (1)	Type H	Type D
Fluid Line Pressure (psi)		
Normal Engine Idle	50-60	50-60
1200 RPM Engine Idle	130(2)	130
PTO Drive Gear Function		
All Forward Drive Gears (3)	Yes	Yes
Reverse(3)	Yes	Yes
Overdrive(3)	No	Yes
PARK (Stationary)	Requires 1200 minimum engine rpm	
PTO Drive Gear Torque Ratings (lb-ft)		
Peak Intermittent	170	180
Continuous	120	180
Non-Volatile PTO Memory	No(4)	Yes
Internal Transmission Fluid Temperature Monitor	Yes(5)	No

(1) Affects PTO clutch capacity.

(2) Torque converter clutch applied and PTO circuit activated. May be as high as 180 psi.

(3) Vehicle road speed must be greater than zero.

(4) 4R100-PTO logic in the PCM is "forgotten" with loss of vehicle battery electrical power. To remedy, a sensor in the transmission needs to count the teeth on the PTO drive gear. Once the vehicle ignition goes through the ON-CRANK-START cycle, a strategy cycle begins in the PCM to look for "PTO". Then, driving the vehicle in 3rd and 4th (Overdrive) gears at steady throttle for 10 seconds should re-activate PTO function. PTO function in the TorqueShift automatic transmission is not similarly affected with loss of battery electrical power.

(5) The 4R100-PTO gear is automatically disconnected when transmission fluid over-temperature condition occurs. Disengage PTO operation and rest the vehicle in PARK or NEUTRAL at normal engine idle. PTO function is automatically returned once the fluid returns to normal operating temperature.

GENERAL RECOMMENDATIONS AND WARNINGS

1. Additional transmission fluid may be required with the addition of the PTO.
2. Follow the severe-duty vehicle maintenance schedules, including transmission fluid changes.
3. Route PTO hydraulic lines and hoses away from the vehicle exhaust system.
4. Diesel engines are recommended over gas engines for stationary PTO operation of extended duration.
5. Do not block air flow circulation to the engine coolant radiator, engine, and transmission fluid cooler.
6. The following are maximum temperatures for powertrain fluids. The PTO system designer or installer should consider adding a sensor to monitor these depending on the demands of the PTO operation's duty cycle. Request a PTO temperature monitor from the PTO supplier where available.

   a. Maximum Engine Top Water: 230° F

   b. Maximum Engine Oil Sump: 284° F

   c. Maximum Transmission Oil Sump: 250° F

   NOTE: If any of the above temperatures are exceeded disengage PTO operation and return vehicle engine speed to normal engine idle. Allow the temperature to stabilize at a lower level before re-engaging the PTO.

Ford Automatic Transmission Fluid Temperature Gauge

Beginning with 2002 model year a Transmission Fluid Temperature Gauge is included with the instrument cluster of Super Duty F-Series, automatic transmission only. A complete description can be found in the vehicle's Owner Guide. The following briefly describes the meanings of the needle readings to help the operator monitor PTO operation.

Cold Range: 50° F or colder.

White Area: "Normal" operating range, 51° F to 248° F.

Yellow Area: "Warning": Stop driving the vehicle or remove auxiliary loads at the earliest convenience. Typically, leave the engine running at normal idle and allow to cool into the normal range before starting to drive or operate the PTO. The transmission fluid is not over-heating, but operating in the Yellow Range for extended periods of tim may cause internal transmission damage.

Red Area: "Over-Temperature": The transmission fluid is over-heating. Stop the vehicle, do not drive, and allow to cool into the normal operating range. If the gauge continues to show high temperatures then see your Ford dealer.

For readings in the Red and Yellow areas, make sure that snow or debris is not blocking airflow to the radiator and transmission fluid cooler, that cooler lines are not kinked or restricted, and that vehicle load capacities or duty cycles are not excessive.

GUIDELINES FOR FRONT END ACCESSORY DRIVE (FEAD) MOUNTED PTO or "CLUTCH-PUMPS"

1. An auxiliary crankshaft bearing support is required on all modular gas engine applications where the clutch-pump is drawing greater than 5-hp from the engine crankshaft pulley. This further applies to all tangentially-mounted auxiliary aftermarket equipment in general.

   a. A "spider" bracket kit can be obtained for this purpose by contacting DewEze Manufacturing, 151 E Hwy. 160, Harper, Kansas, 67058. Toll-free phone: (800) 835-1042, or fax: (316) 896-7129. It provides up to 70 lb-ft of torque at the clutch-pump. Part Numbers: (6.8L) XC2E-7275-BB, (5.4L) XC2E-7275-AB. QVM Bulletin No. Q-62 has a complete description of the kit and its usage.

   b. QVM Bulletin No. Q-74 amends Bulletin Q-62, describing how the "Spider" bracket is not required for auxiliary equipment requiring less than 5-hp. Both bulletins are available at www.fleet.ford.com/truckbbas, and select "Bulletins".

2. Always maintain the clearance relationship between the Ford OEM fan, radiator, and shroud to help maintain optimum engine cooling performance.
3. Always consider engine roll and body/frame torsion when packaging clearances.
4. Restrict FEAD-PTO application to 5.4L and 6.8L gas, and 7.3L and 6.0L diesel engines.
5. Temperature monitoring of powertrain fluids as discussed earlier in this section is recommended.

STATIONARY ELEVATED IDLE CONTROL

Ford offers the following two methods for obtaining stationary elevated idle control for 7.3L and 6.0L diesel engines. For gas engines the PTO installer will need to obtain elevated idle control from an aftermarket source:

a. "Auxiliary Idle Control": option code 96P for F-Series (option code 961 for E-Series) contains a "full function" Auxiliary Powertrain Control Module or APCM, mounting bracket and operating manual. It must be ordered separately and is not included with the Transmission Power Take-Off Provision option. A "limited function" APCM is included in the kit that is part of the Ambulance Prep Option, has no LED read-out, and is not a separate orderable option. Both of these kits are more fully described later in this section under PTO Auxiliary Idle Control. The operating manuals can be found at www.fleet.ford.com/truckbbas, then "Publications" drop-down box. It will function for both manual or automatic transmissions.

b. "Elevated Idle Feature": this feature is inherent in the powertrain control modules of diesel engine vehicles ordered with "Transmission Power Take-Off Provision". Activating the Ford "PTO Circuit" will automatically elevate the engine idle to 1200 rpm in "PARK" or "NEUTRAL" regardless of the parking brake being set. This feature does not require use of the Auxiliary Idle Control option or APCM module. This feature is not available for manual transmission.

SPLIT-SHAFT PTO

Light truck automatic transmissions from Ford are not prepared for split-shaft PTO operation. The electronic control strategy is affected, and the powertrain has not been fully qualified for the higher horsepower and extended duration usage typical of this application. Restricting split-shaft application to manual transmission only is recommended. Also, temperature monitoring and control of the manual transmission fluid is highly recommended.

POWER TAKE-OFF INSTALLATION
M60D MANUAL TRANSMISSIONS
4R100 AND TORQSHIFT

POWERTRAIN COMPATIBILITY				
FORD POWERTRAIN			PTO MODEL SERIES (1)	
Engine	Manual Transmission	PTO Port Location (vehicle side)	Multi-Gear Single Speed	
			Chelsea	Muncie
All	M60D	LH	440	TG

(1) Consult PTO manufacturer for complete detail on gear set, usage and exceptions.
SG / TG = Single Gear / Two Gear

POWERTRAIN COMPATIBILITY					
FORD POWERTRAIN			AFTERMARKET PTO MODEL SERIES (1)		
Engine	Automatic Transmission	PTO Port Location (vehicle side)	Multi-Gear Single Speed		
			Chelsea	Muncie	Bazares (PTO, Inc.)
6.8L 4x2	4R100	LH	242	FA62	TBD
6.8L 4x4			244	FA64	TBD
7.3L Diesel 4x2	4R100	LH	242	FA62	TBD
7.3L Diesel 4x4			244	FA64	TBD
6.0L Diesel 4x2	TorqShift	LH	245	FR62	TBD
6.0L Diesel 4x4			245	FR64	TBD

(1) Consult PTO manufacturer for complete detail on gear set, usage and exceptions.

AUTOMATIC TRANSMISSION PTO DRIVE GEAR DATA		
	TRANSMISSION 4R100	TorqShift 5-Speed
GEAR RATIO	2.71 (1ST)	3.09
NUMBER OF TEETH	115	121
DIAMETRAL PITCH		
PITCH DIAMETER	216.33 mm	215.985 mm
NORMAL PRESSURE ANGLE	15.907°	17.989°
ANGLE AND HAND OF HELIX	18° Left	Spur
RPM @ 1000 RPM OF ENGINE	1000 RPM	1000 RPM
PITCH LINE DIAMETER VELOCITY @ 1000 RPM OF ENGINE	2230 ft/min	2226 ft/min

M60D MANUAL TRANSMISSION PTO DRIVE GEAR DATA	
GEAR RATIO	5.79 (LOW)
NUMBER OF TEETH	39
DIAMETRAL PITCH	9.2364
PITCH DIAMETER	132.568 mm
NORMAL PRESSURE ANGLE	20°
ANGLE AND HAND OF HELIX	36° RH
RPM @ 1000 RPM OF ENGINE	590
PITCH LINE VELOCITY @ 1000 RPM OF ENGINE	806

The M60D manual transmission case will require a slight modification to package PTO pumps that are mounted directly to the PTO and facing rearward. Refer to Figure 1 for instructions on removing a small tab on the case to obtain clearance for the pump.

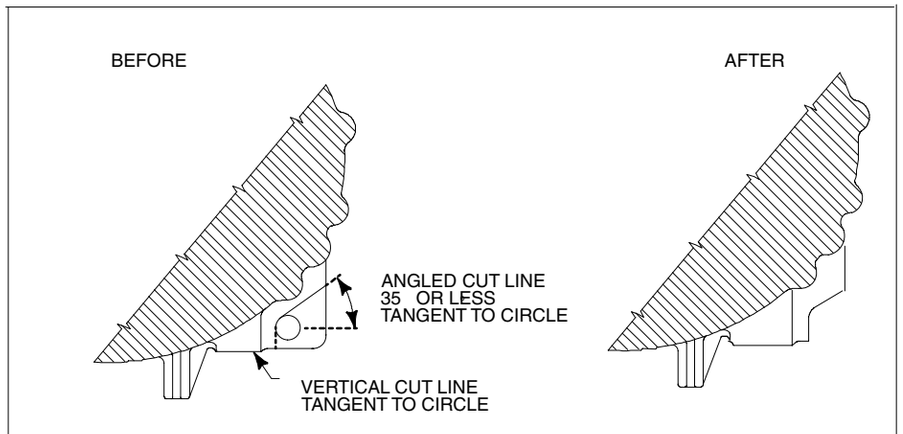

FIGURE 1

BB0443

Instructions for removing M60D case tab (for PTO clearance)
A section of the aluminum tab may be removed as indicated above. Use a mechanical tool only, such as a die grinder. DO NOT use a flame torch of any kind to remove aluminum transmission case material.

NOTES — [ ] DIMENSIONS ARE INCHES.
— M60D USES ALL METRIC FASTENERS EXCEPT FOR COOLER LINES.
— DO NOT SCALE DRAWINGS.
— PTO OPENING IS A STANDARD 6 BOLT SAE #J704B.

POWER TAKE-OFF INSTALLATION
M60D MANUAL TRANSMISSIONS
4R100 AND TORQSHIFT

POWERTRAIN COMPATIBILITY				
FORD POWERTRAIN			PTO MODEL SERIES (1)	
Engine	Manual Transmission	PTO Port Location (vehicle side)	Multi-Gear Single Speed	
			Chelsea	Muncie
All	M60D	LH	440	TG

(1) Consult PTO manufacturer for complete detail on gear set, usage and exceptions.
SG / TG = Single Gear / Two Gear

POWERTRAIN COMPATIBILITY					
FORD POWERTRAIN			AFTERMARKET PTO MODEL SERIES (1)		
Engine	Automatic Transmission	PTO Port Location (vehicle side)	Multi-Gear Single Speed		
			Chelsea	Muncie	Bazares (PTO, Inc.)
6.8L 4x2	4R100	LH	242	FA-62	TBD
6.8L 4x4			244	FA-64	TBD
7.3L Diesel 4x2	4R100	LH	242	F4-62	TBD
7.3L Diesel 4x4			244	FA-64	TBD
6.0L Diesel 4x2	TorqShift	LH	245	TBD	TBD
6.0L Diesel 4x4			245	TBD	TBD

(1) Consult PTO manufacturer for complete detail on gear set, usage and exceptions.

AUTOMATIC TRANSMISSION PTO DRIVE GEAR DATA		
	TRANSMISSION 4R100	TorqShift 5-Speed
GEAR RATIO	2.71 (1ST)	3.09
NUMBER OF TEETH	115	121
DIAMETRAL PITCH		
PITCH DIAMETER	216.33 mm	215.985 mm
NORMAL PRESSURE ANGLE	15.907°	17.989°
ANGLE AND HAND OF HELIX	18° Left	Spur
RPM @ 1000 RPM OF ENGINE	1000 RPM	1000 RPM
PITCH LINE DIAMETER VELOCITY @ 1000 RPM OF ENGINE	2230 ft/min	2226 ft/min

M60D MANUAL TRANSMISSION PTO DRIVE GEAR DATA	
GEAR RATIO	5.79 (LOW)
NUMBER OF TEETH	39
DIAMETRAL PITCH	9.2364
PITCH DIAMETER	132.568 mm
NORMAL PRESSURE ANGLE	20°
ANGLE AND HAND OF HELIX	36° RH
RPM @ 1000 RPM OF ENGINE	590
PITCH LINE VELOCITY @ 1000 RPM OF ENGINE	806

The M60D manual transmission case will require a slight modification to package PTO pumps that are mounted directly to the PTO and facing rearward. Refer to Figure 1 for instructions on removing a small tab on the case to obtain clearance for the pump.

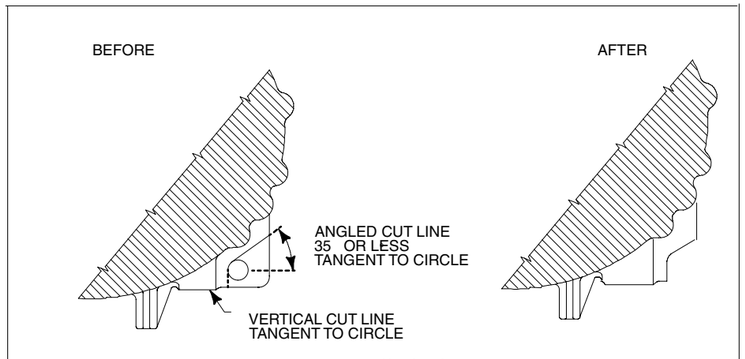

FIGURE 1

BB0443

Instructions for removing M60D case tab (for PTO clearance)
A section of the aluminum tab may be removed as indicated above. Use a mechanical tool only, such as a die grinder. DO NOT use a flame torch of any kind to remove aluminum transmission case material.

NOTES — [ ] DIMENSIONS ARE INCHES.
— M60D USES ALL METRIC FASTENERS EXCEPT FOR COOLER LINES.
— DO NOT SCALE DRAWINGS.
— PTO OPENING IS A STANDARD 6 BOLT SAE #J704B.

POWER TAKE-OFF
AUXILIARY IDLE CONTROL — DIESEL ONLY

AUXILIARY IDLE CONTROL KITS

Each kit includes an Auxiliary Powertrain Control Module (APCM), wiring harness, mounting bracket with hardware, operator's card and instruction book. Kits are shipped with the vehicle for customer installation. The APCM wire harness that connects under the instrument panel is not intended to be lengthened. The modules are splash-resistant but not water-proof. The APCM instruction book is also available at www.fleet.ford.com/truckbbas. Look under "Publications" on the homepage.

Carryover Kit Part Numbers 1995.5 thru 1998 Model Years		
Option Code 961 / Included with Ambulance PP		
E-Series	1995-1996 Model Years	F5UF-12B641-AA [F5PF-12B641-BA]
	1997-1998 Model Years	F7UF-12B641-AC [XC2Z-12B641-AA]
F-Series	1995-1997 Model Years	F5TF-12B641-AD [F5PF-12B641-AA]
	1998 Model Years	F81F-12B641-DB [XC3Z-12B641-AA]

For 7.3L Diesel Engine only unless otherwise noted APCM = Auxiliary Powertrain Control Module			Auxiliary Idle Control Kits (Diesel Engine Only) "Enhanced" or "Full Function" 1999 thru 2002 Model Years LPO Option Codes: 96P = SD F-Series 961 = E-Series		"Limited Function" 1999 thru 2002 Model Years Included with Ambulance Package Unavailable separately	
			Kit P/N	APCM P/N	Kit P/N	APCM P/N
E-Series	Original Mounting Bracket [YC2F-12K526-BA]		XC2F-12B641-AB [XC2Z-12B641-AA]	XC3F-12B640-AA	XC2F-12B641-BB [XC2Z-12B641-BA]	XC3F-12B640-BA
		New Software (Note-1)	XC2F-12B641-AC	XC3F-12B640-AB	XC2F-12B641-BC	XC3F-12B640-BB
	Mounting Bracket Revised for 2000 MY Console		YC2F-12B641-AA	XC3F-12B640-AA	YC2F-12B641-BA	XC3F-12B640-BA
		New Software (Note-1)	YC2F-12B641-AB	XC3F-12B640-AB	YC2F-12B641-BB	XC3F-12B640-BB
F-250/350/450/550			XC3F-12B641-AB [XC3Z-12B641-AA]	XC3F-12B640-AA	XC3F-12B641-BB [XC3Z-12B641-BA]	XC3F-12B640-BA
		New Software (Note-1)	XC3F-12B641-AC 7.3L & 6.0L Diesel	XC3F-12B640-AB	XC3F-12B641-BC 7.3L & 6.0L Diesel	XC3F-12B640-BB
F-650/750			XC3F-12B641-AB [XC3Z-12B641-AA]	XC3F-12B640-AA	(Not Available)	(Not Available)
		New Software (Note-1)	XC3F-12B641-AC 7.3L & 6.0L Diesel	XC3F-12B640-AB		

Note-1: The APCM in the kit has new software (2002.5 MY) to resolve invalid RPM setpoint "4100".
FCDS Service Part Numbers are shown in brackets: [XC2Z-12B641-AA]

POWER TAKE-OFF
AUXILIARY IDLE CONTROL — DIESEL ONLY

Vehicle Enabling Conditions (all are required)	Vehicle Disabling Conditions (any one required)
Parking brake applied	Parking brake disengaged
Foot off of service brake	Depressing service brake
Vehicle in PARK (auto. trans.) Foot off of clutch (manual trans.)	Vehicle taken out of PARK Clutch depressed
Foot off of accelerator pedal	
Vehicle speed is 0 mph (stationary)	
Brake lights functional	Brake light circuit disconnected
Engine at stable normal idle speed	

Pigtail Wires "Full Function" APCM Only

All signals are low-current (20 mA nominal) to allow extending the wires to a remote vehicle location.		
Pin Number	**Wire Color**	**Description**
1	Red	Source for remote control switch. A 5-volt DC signal reference output.
2	Orange	ON/Off input for Charge-Protect. Use a normally-open momentary contact switch, UL-recognized, suitable for the required operating environment.
3	Pink	Input for variable or "customized" RPM. Use a potentiometer or similar device to obtain the variable resistance. Example: Duncan-style POT, 10K Ohm ± 20%.
5	Black	Signal return for variable RPM input.
7	Gray	On/Off input for RPM control. Use a normally-open momentary contact switch, UL-recognized, suitable for the required operating environment.
11	Yellow	12-volt DC power take-off output. VBAT source (1A) for PTO circuit solenoid.

Features

FF: Full Function APCM LF: Limited Function APCM			
	FF	**LF**	**Carryover**
LCD Readout (RPM and Voltage)	X	No (1/)	X
RPM Control (1200-2500 RPM range)	X	X	X
RPM Control – Automatically activated at engine start	X		X
Battery Charge Protection (2/) 1100-2500 RPM range for E-Series	X	X	X
Battery Charge Protection – Automatically activated at engine start (3/)	X	X	X
PTO Activation	X		
Link elevated idle with PTO to activate together	X		
Program upper and lower RPM speeds to protect PTO	X		
Remote Control (RPM Control, PTO and Charge Protection)	X		
Programmable to prevent inadvertent activation of Charge Protection or Manual RPM adjustment features.			X

(1/) Separate aftermarket RPM and voltage meters are required to obtain a readout. However, if the APCM is programmed while engine RPM is at or outside its range of 1200 (or 1100) min. to 2500 max. RPM then the APCM will default to one of its limits. Example: Programming while engine is at W.O.T. of near 3400 RPM will result in the APCM recording a 2500 RPM setting.

(2/) Works with automatic or manual transmission.

(3/) Works with automatic transmission only.

POWER TAKE-OFF
AUXILIARY IDLE CONTROL — DIESEL ONLY

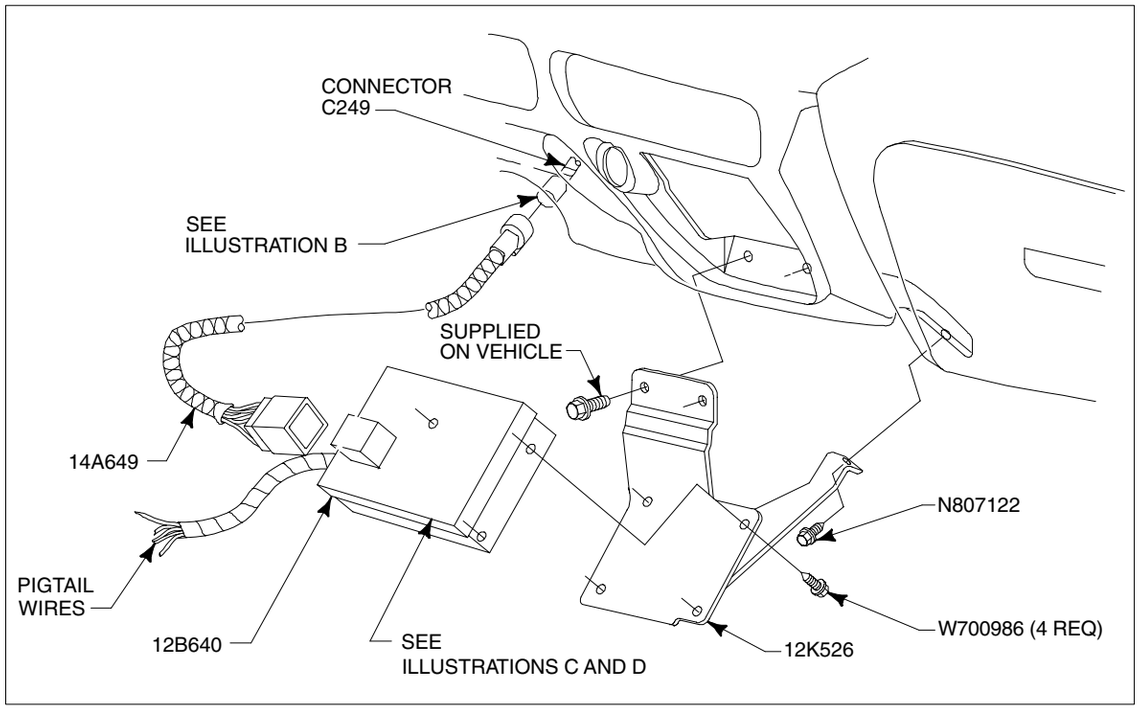

FIGURE A - SUPER DUTY (F-SERIES SHOWN)

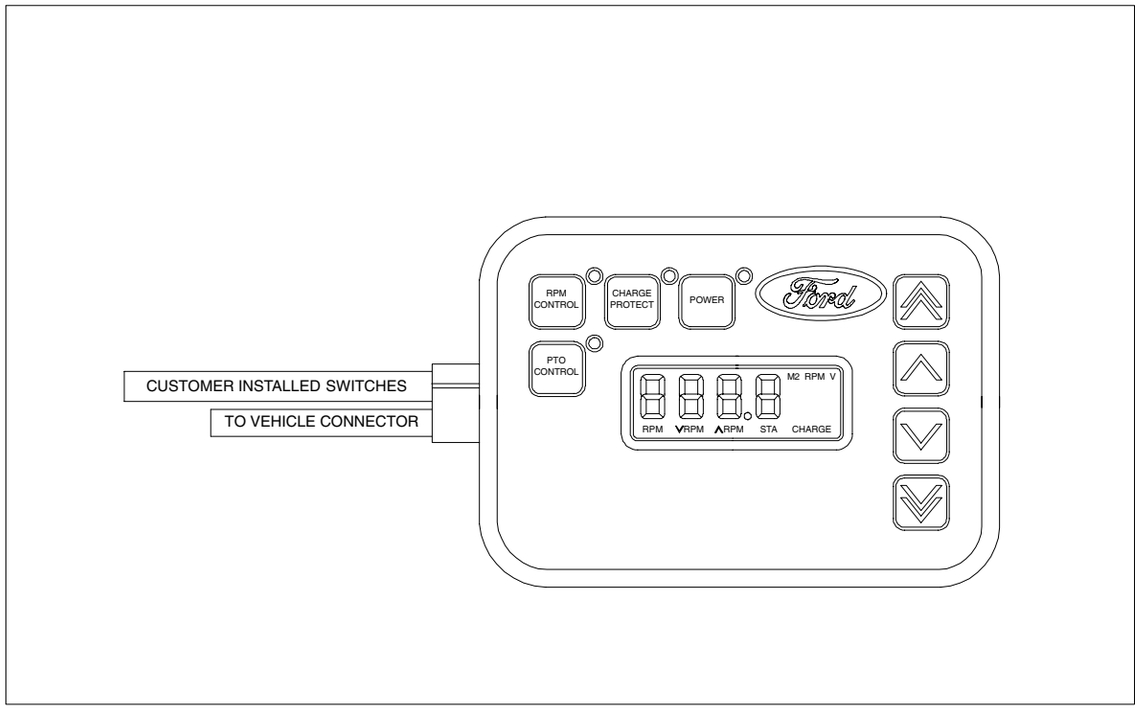

FIGURE C - “FULL FUNCTION” APC MODULE

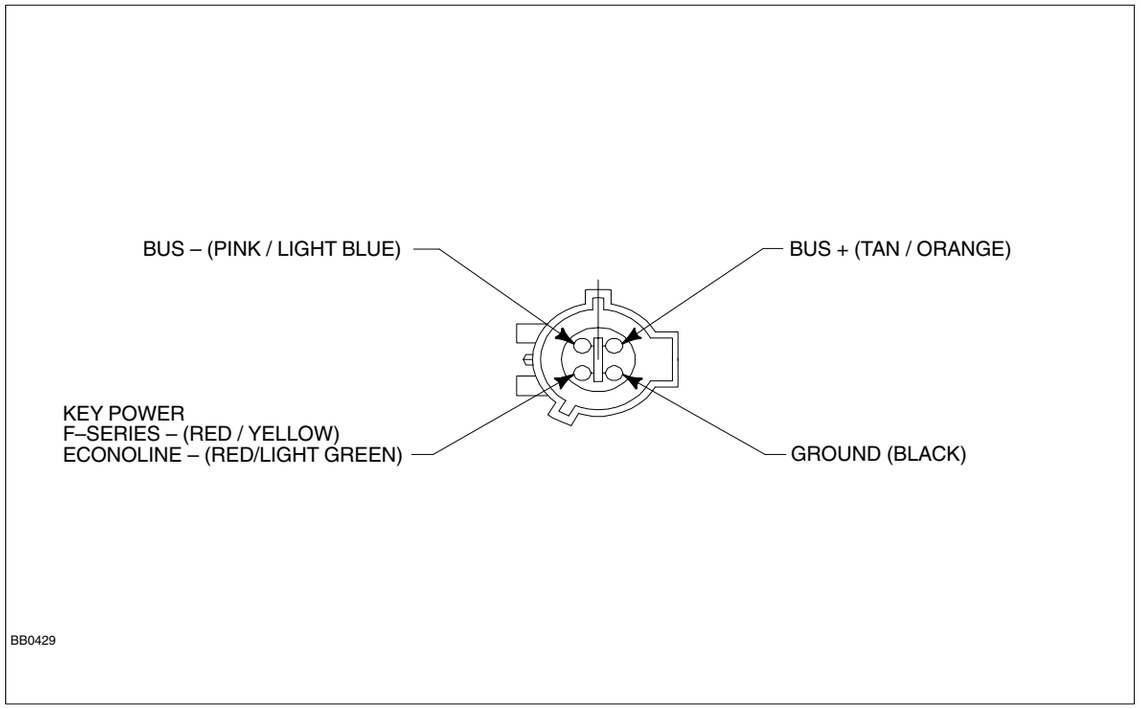

FIGURE B - APC MODULE HARNESS CONNECTOR (VEHICLE SIDE)

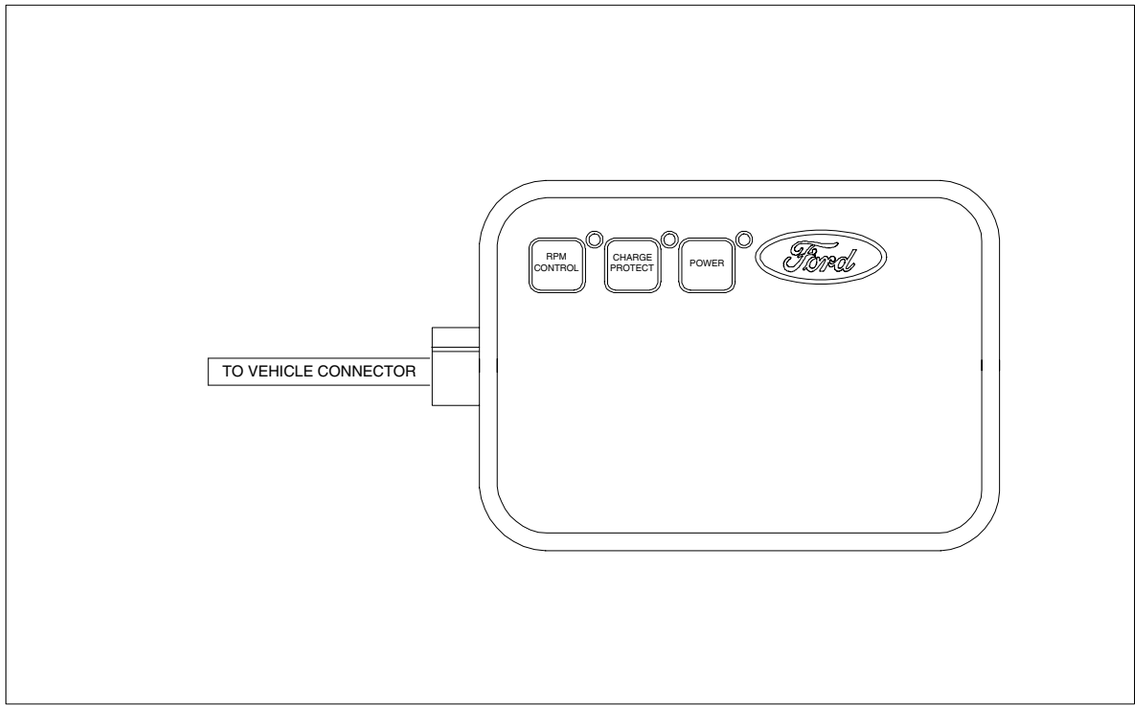

FIGURE D - “LIMITED FUNCTION” APC MODULE

ELECTRICAL WIRING
POWER TAKE-OFF CIRCUIT INSTALLATION

The Body Builder must provide a PTO Circuit to alert the PCM to PTO operation. Failure to provide this circuit may result in erroneous emission codes, and inadvertent illumination of the “Service Engine Soon” light during PTO operation.

Circuits. 294 (WH/LB) is located in the center of the instrument panel, labeled “Power Take-Off Circuit” (See Figure A). It is easier to access from the front of the instrument panel (IP) by removing the access panel below the steering column (4 quarter turn fasteners).

Splice circuit 294 (WH/LB) to the body builder provided wire that connects to the positive side of the PTO indicator switch or PTO control relay.
Splice circuit 322 (LB/YE) located under-dash near the parking brake pedal, to the body builder provided wire that connects to the positive (switched) side of the PTO indicator light. (See Figure C1). In electrically-actuated PTO systems, the wires labeled “Power Take-Off” must be isolated from the solenoid or PCM DAMAGE COULD RESULT (See Figure C2).

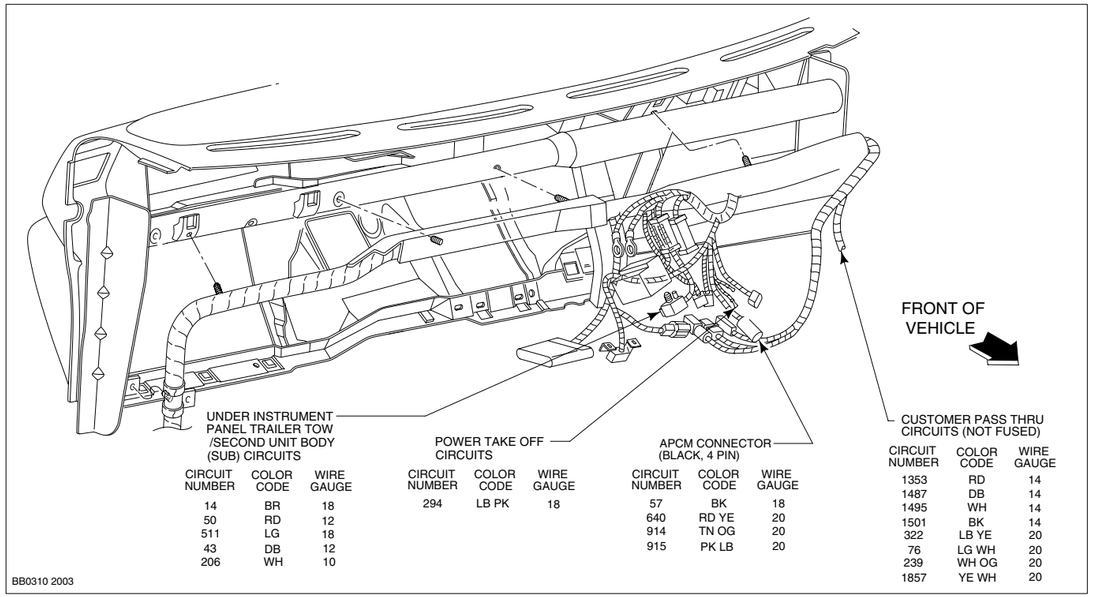

CIRCUIT NUMBER	COLOR CODE	WIRE GAUGE
14	BR	18
50	RD	12
511	LG	18
43	DB	12
206	WH	10

CIRCUIT NUMBER	COLOR CODE	WIRE GAUGE
294	LB PK	18

CIRCUIT NUMBER	COLOR CODE	WIRE GAUGE
57	BK	18
640	RD YE	20
914	TN OG	20
915	PK LB	20

CIRCUIT NUMBER	COLOR CODE	WIRE GAUGE
1353	RD	14
1487	DB	14
1495	WH	14
1501	BK	14
322	LB YE	20
76	LG WH	20
239	WH OG	20
1857	YE WH	20

FIGURE A VIEW UNDER DASH SUPER DUTY F SERIES

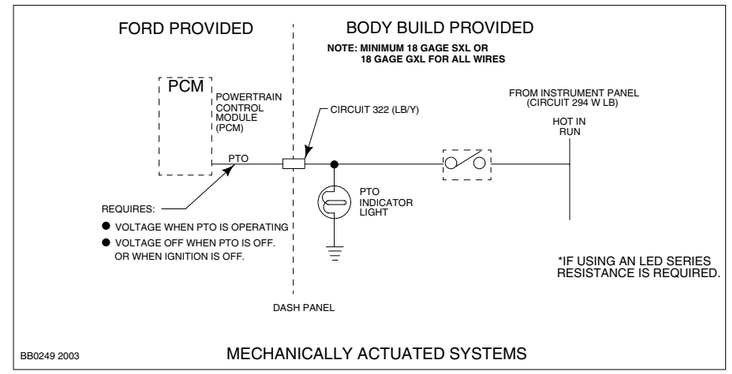

FIGURE C1 SUPER DUTY F SERIES

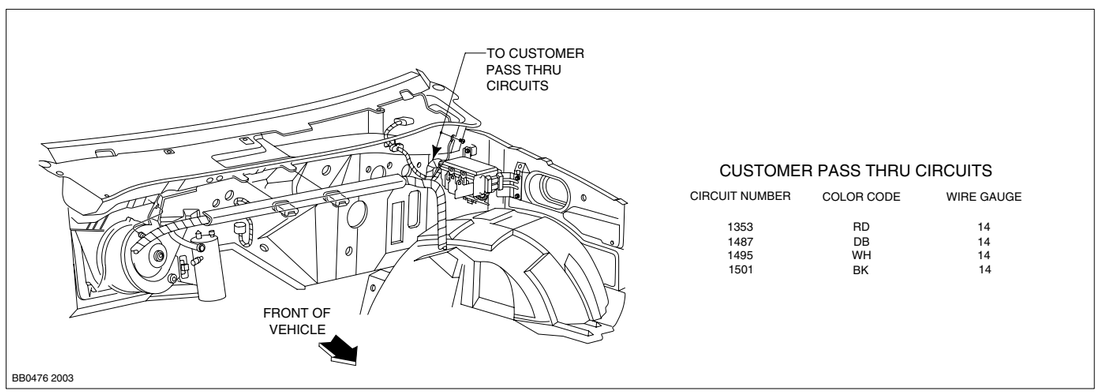

CUSTOMER PASS THRU CIRCUITS

CIRCUIT NUMBER	COLOR CODE	WIRE GAUGE
1353	RD	14
1487	DB	14
1495	WH	14
1501	BK	14

FIGURE B VIEW UNDER HOOD SUPER DUTY F SERIES

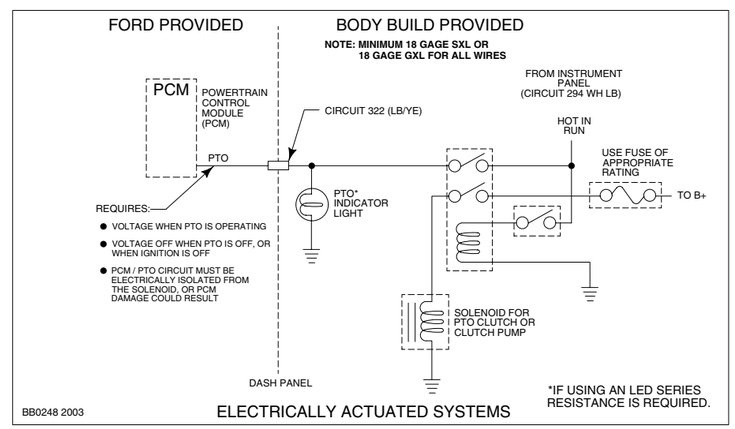

FIGURE C2 SUPER DUTY F SERIES

ELECTRICAL WIRING
CUSTOMER ACCESS CIRCUITS

1. Super Duty F-Series and selected E-Series Super Duty vehicles are equipped with a number of conveniently located electrical wiring taps. Most taps are fused, having locations under the instrument panel, in the engine compartment, and at the rear of the frame. Illustrations, schematics and a wiring harness for Trailer Tow is provided in a cardboard box shipped with each vehicle. The circuits at the rear of the frame are provided to support trailer wiring requirements or the Second Unit Body (SUB) additions. The Super Duty F-Series Circuit chart on the next page is a brief description of each circuit function, wire gauge, color code and electrical schematic.
2. The Ford starting and the charging system should not be altered.
3. The completed vehicle total electrical load must not exceed the maximum output of the alternator.
4. Do not route or attach electrical wires to fuel lines.
5. Engine compartment wiring must not be rerouted in any manner.
6. The 7.3L diesel engine requires two batteries wired in parallel for proper starting operation and must not be isolated. Do not modify the Glow Plugs Power Circuit.
7. Ford recommends that all additional underhood and underbody wiring:
   - be cross-linked polyethylene, or equivalent, high temperature insulation wire 125° C [257° F] minimum rating.
   - meet SAE specifications J1128 type SXL, GXL or TXL.
   - meet SAE J1127 type SGX or STX for battery cables.
   - be protected with nylon convoluted tubing.
   - be located so as to avoid or minimize restriction of airflow through the engine compartment, underbody and fuel system.
   - be of sufficient length to be properly routed, so as not to interfere with operating zones of such components as throttle or transmission linkage.
   - not be routed near the exhaust system or no other source of high heat; melted insulation can result in electrical shorts and system failure.
   - be routed away from hostile surfaces and sharp edges and be secured in its intended location.
   - be protected by rubber grommets when it passes through body or frame openings. Use customer access pass-thru circuits provided on Super Duty F-Series as shown in Figure B on page 199, to avoid additional openings between passenger and engine compartments.
   - be protected from electrical shorts by fuses or circuit breakers.
   - be routed at least 38mm [1.5in] away from engine.
8. Interior wiring not exposed to high temperatures may be SAE approved, general purpose wire.
9. Ground the second unit body to the frame in at least two locations, and if required, add an additional frame to engine ground cable to improve the ground path to the battery.
10. Splicing into circuitry relating to the powertrain control systems is not acceptable because of the adverse effect on the electrical system operation.
11. Batteries must be disconnected before welding to body and chassis components. Note that disconnecting the batteries will result in a memory loss on electronic engine/ transmission controlled vehicles. The vehicle will require several miles of driving in various driving modes to restore its memory and regain optimum operating conditions.
12. Electrical connections exposed to the elements should be appropriately protected.
13. Do not ground the body to the transmission or transmission crossmember.
14. Ignition circuit of any engine should not be altered.
15. Alternator circuit wiring must not be altered by cutting, soldering or splicing.
16. Aero type head lamps are plastic and have protective coatings which can be damaged by solvents or tape. Refer to the *Owner's Guide* for proper cleaning procedures.
17. For convenience (4) 14 ga. pass thru circuits are located under the center of the I/P and the LH fender apron. These circuits provide an unfused means to interface with the engine compartment and frame wiring without drilling through the dash panel and installing a wire harness grommet to prevent water leaks. See Figure B, page 199 and 201.
18. Center High Mounted Stop Lamp (CHMSL) wiring taps are provided on E-Series Super Duty Cutaway/Chassis Cab/Stripped Chassis and Super Duty F-Series Chassis Cab vehicles. See pages 201-202.
19. Electrical bulbs are listed in the *Owner's Manual* Bulb Chart. Check for the "DOT" marking on the bulb base which means the bulb meets U.S. "DOT" standards. Bulbs without the "DOT" marking or that produce different colors other than the original bulbs as listed in the bulb chart, may affect the lamps light output, aim, glare and your safety; in addition, such bulbs may burn out early or damage the lamp.
20. Super Duty F-Series vehicles are equipped with a clean tachometer output (CTO) wiring tap. The tap is designated circuit 76 (LG/WH) and is located under dash near the parking brake pedal. See Figure A, page 199. This tap should be used if a tachometer signal is required. The signal is digital and requires a digital tachometer. The signal pulse rate is half the number of engine cylinders per revolution (i.e., 4 for 5.4L, 7.3L Diesel and 5 for 6.8L).

E-SERIES ELECTRICAL WIRING
CUSTOMER ACCESS CIRCUITS

Circuit Number	Color Code	Wire Gauge	Functional Description
14	BN	14	Marker lamp feed to electric brake controller
43	DB	12	Electric tailer brake controller to trailer
49	OG	10	Relay feed ignition run
22	LB/BK	12	Trailer brake controller or B+ feed
52	YE	18**	Fused left hand stop/turn
64	DG	18**	Fused right hand stop/turn
206	WH	14*	Ground
511	LG	18	Center high mount or lamp feed stop
962	BN-WH	14	Relay feed marker lamps
963	BK-LG	12	Relay feed backup lamps
867	DB	12	Customer pass thru circuits
868	GY-RD	12	Customer pass thru circuits
53	BK-LB	18	Courtesy lamps
54	LG-YE	18	Courtesy switch feed
3	LG/WH	18	Left turn signal
2	WH/LB	18	Right turn signal

* 10 for 7-pin Trailer Tow Connector
** 14 for 7-pin Trailer Tow Connector

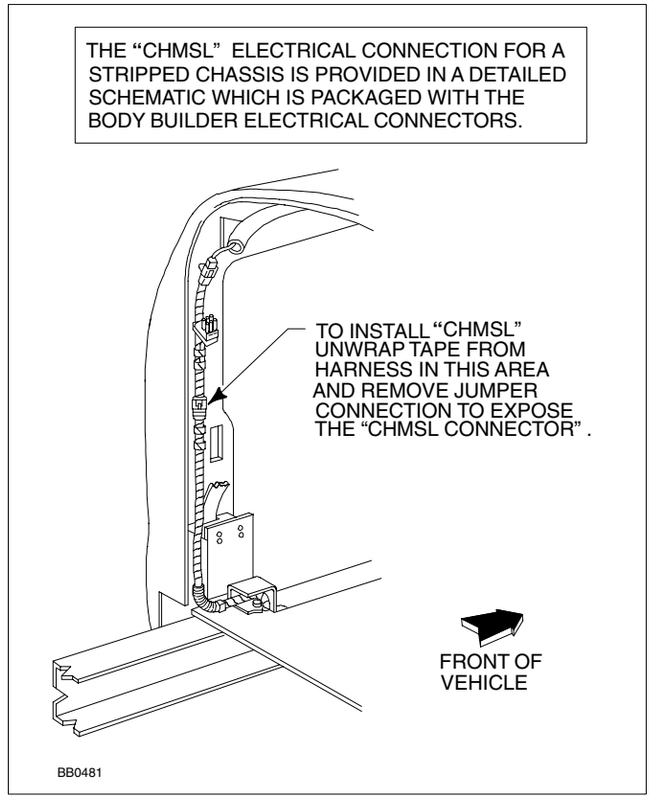

E-SERIES SUPER DUTY
CUTAWAY/CHASSIS CAB/STRIPPED CHASSIS

SUPER DUTY F-SERIES
ELECTRICAL WIRING
CUSTOMER ACCESS CIRCUITS

Circuit Number	Color Code	Wire Gauge	Functional Description
14	BR	18	Marker lamp feed to electric brake controller
43	DB	12	Electric tailer brake controller to trailer
49	OG	12	Relay feed ignition run
50	RD	12	Trailer brake controller or B+ feed
52	YE	16	Left hand stop/turn
64	DG	16	Right hand stop/turn
206	WH	16	Ground
294	WH-LB	18	Fused hot in run
322	LB-YE	20	Power takeoff relay or switch to powertrain control module (PCM)
511	LG	18	Center high mount or lamp feed stop
962	BR-W	16	Relay feed marker lamps
963	BK-LG	16	Relay feed backup lamps
1353	RD	14	Customer pass thru circuits
1487	DB	14	Customer pass thru circuits
1495	WH	14	Customer pass thru circuits
1501	BK	14	Customer pass thru circuits

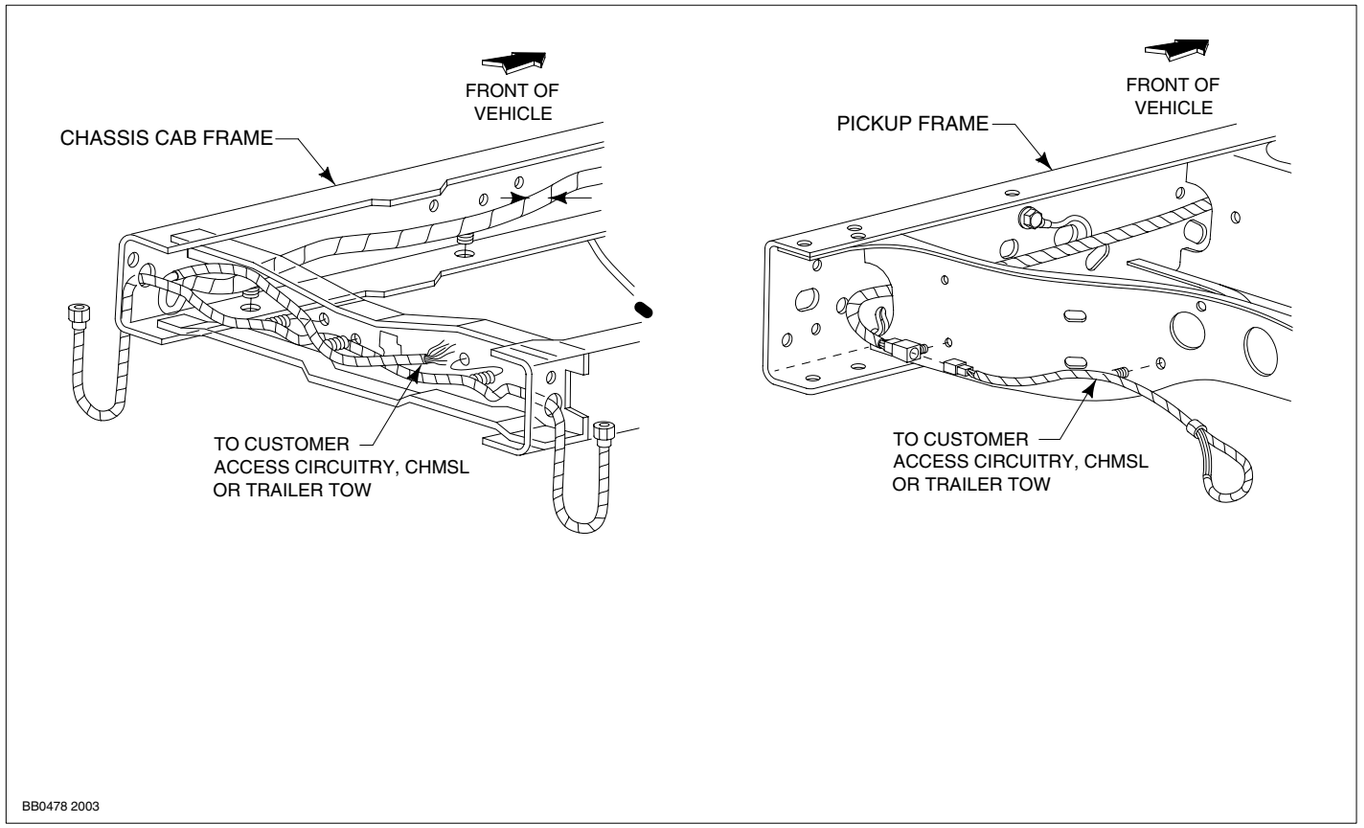

SUPER DUTY F-SERIES

ELECTRICAL WIRING
SUPER DUTY F-SERIES — TRAILER TOW
SECOND UNIT BODY WIRING TAP SCHEMATIC

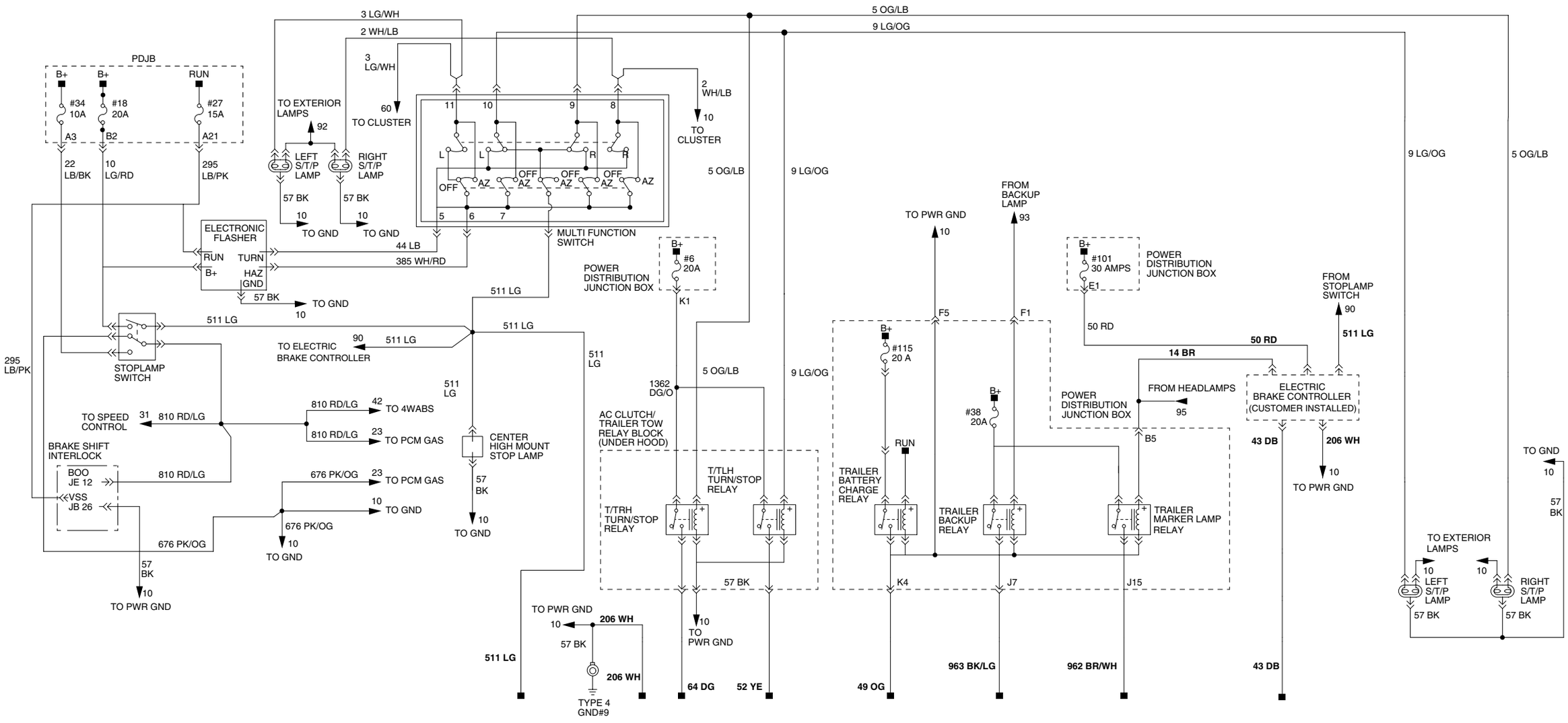

BB0320 2003

NOTE — SEE FIGURE B, PAGE 199 AND 202.

ELECTRICAL WIRING GENERAL PRACTICES

This section provides instructions for the addition of electrical devices to the vehicle electrical system by body builders.

(Vehicles stored on site should have the negative battery cable disconnected to minimize "Dead Battery" situation. This applies to both "incomplete" and "complete" vehicles in storage.)

After all electrical or vehicle modifications, perform the on-board diagnostics as described in the powertrain control/emissions diagnosis manual to clear all diagnostic trouble codes (DTCs). Road test vehicle and rerun the on-board diagnostics to verify that no DTCs are present. If DTCs are generated perform the appropriate diagnostic procedures and repairs. Vehicle operation (engine/transmission) may be affected if DTCs are not serviced.

F/CMVSS, U.S. and Canadian RFI Requirements:

1. All Ford vehicles built and fully completed by Ford, comply with F/CMVSS No. 108, "Lamps, Reflective Devices and Associated Equipment" and other applicable F/CMVSS that affect electrical components. Care must be taken that modifications do not conceal, alter or change components installed or provided by Ford Motor Company to achieve this conformance.
2. Incomplete vehicles (i.e., Chassis Cab, Stripped Chassis, etc.) will conform to the F/CMVSS according to the provisions and conditions stated in the *Incomplete Vehicle Manual* (IVM) attached to each incomplete vehicle.
3. Devices that emit radio frequency (RF) energy, such as AM/FM radios and radio-controlled security systems, marketed for sale or use in the United States are subject to the rules and regulations of the Federal Communications Commission (FCC) 47 CFR Parts 2 and 15.

   These rules specify the following conditions of operation:

   This device complies with Part 15 of the FCC Rules. Operation is subject to the following two conditions: (1) This device may not cause harmful interference, and (2) this device must accept any interference received, including interference that may cause undesired operation.

   In addition, the FCC's Rules may require the device to be tested and found to comply with various RF interference emission limits before it may be marketed. The FCC establishes different limits according to the particular use and installation of RF devices. In some cases, a grant of equipment authorization from the FCC also must be obtained before any RF device may be marketed. Labeling with certain FCC information may also be required.

   To ensure continued compliance with the FCC's requirements, the owner, user, custom manufacturer, or service technician must not modify or change the RF device in a manner not expressly approved by Ford Motor Company. Such modifications could void the authority to operate the device.
4. All vehicles powered by spark ignition internal combustion engines (e.g., gasoline or liquid petroleum gas engines) and manufactured in Canada or for sale or use in Canada are subject to the Canadian "Regulations for the Control of Interference to Radio Reception," SOR/75-629, Canada Gazette Part II, Vol. 109, No. 21, November 12, 1975, as amended by SOR/77-860, Canada Gazette Part II, Vol.111, No. 21, November 9, 1977, by SOR/78-727, Canada Gazette Part II, Vol. 112, No. 18, September 27, 1978, and by SOR/80-915, Canada Gazette Part II, Vol. 114, No. 23, December 10, 1980. Violation of these regulations is punishable by fine or imprisonment. Ford-built incomplete vehicles other than stripped chassis are designed and manufactured to be capable of meeting the regulatory requirements or such modifications thereof as may be authorized by the Canadian Department of Communications.

   However, because Ford has no control over how an incomplete vehicle is completed by subsequent stage manufacturers, Ford does not represent that the completed vehicle incorporating the Ford-built components will comply with applicable requirements.

Routing & Clipping:

1. It is strongly recommended that wiring in areas of heavy rework, or in areas where welding operations are to be performed, be removed prior to the rework operations and reinstalled after the rework is completed. If vehicle is equipped with a Powertrain Control Module (PCM), the PCM Module must be disconnected before any electrical welding is performed, otherwise module damage may result. If wire removal is not practical, the wires must be shielded from damage due to the rework and welding heat. All components and wiring should be reinstalled as closely as possible to the way it was installed before removal.
2. Wire routings of newly installed components or wire routing revisions of the Ford harnesses necessitated by reworks must conform to the following:

- Wires routed through holes in sheet metal or castings must have the hole edges protected by a grommet.
- Wires should be routed to avoid metal edges, screws, trim fasteners and abrasive surfaces. When such routings are not possible, protective devices (shields, caps, etc.) must be used to protect the wires and when wires must cross a metal edge the edge should be covered with a protective shield and the wiring fastened within 3 inches of the edge.
- Wires must be routed to provide at least 3 inches clearance to moving parts, unless positively fastened or protected by a conduit.
- Existing heat shields, insulation, and wire shielding/twisting must be maintained.
- Wire routings should avoid areas where temperatures exceed 180° F and a minimum clearance of 6 inches should be maintained from exhaust system components. Where compliance with this requirement is not possible, high temperature insulation and heat shields are required.
- When wiring is routed between two members where relative motion can occur the wiring should be secured to each member, with enough wire slack to allow flexing without damage to the wire.
- Wiring to all circuit components (switches, relays, etc.) in exposed locations must provide a drip loop to prevent moisture from being conducted into the device via the wire connection.
- Routing wires into areas exposed to wheel wash should be avoided. When such routings cannot be avoided, adequate clipping or protective shields are required to protect the wires from stone and ice damage.
- The wire retainers and grommets installed by the assembly plant are usually designed to accommodate only the Ford-installed wires. Additional wiring or tubing should be retained by additional clips. When added wires or tubes are routed through sheet metal panels, new holes, with proper wire protection and sealing, must be used.
- All wiring connections to components of the factory-installed system must be accomplished by using the proper mating wire termination. (Connections on studs and ground connections must use eyelet terminations, connections to female bullets must terminate in male bullets, etc.)

Splice/Repair:

When necessary to splice wire for repair or circuit length revisions, the following guide should be followed:

- Wire ends should be stripped making sure that individual conductor strands are not damaged.
- When soldering, make sure an adequate mechanical joint exists **before** applying solder. Use only rosin core solder — **never** acid core.
- For crimp joints, use butt-type metal barrel fasteners and a proper tool (such as Motorcraft crimp tool S-9796) specifically designated for this type of work.
- Splice joints must be adequately sealed and insulated. Adhesive lined heat shrink tubing is highly recommended to cover soldered and bare, metal barrel, crimp joints. Quality electrical tape can be used inside the vehicle but is not recommended for an outside environment.
- Seal the ends of insulated barrel crimp devices with a silicone grease when in an outside environment.
- The most durable splice joint will be bare metal barrel crimped, flow-soldered and covered with adhesive lined heat shrink tubing. Use this type of joint as often as possible.

Circuit Protection:

1. Modification to existing vehicle wiring should be done only with extreme caution and consideration of effects on the completed vehicle electrical system. Anticipated circuitry should be studied to ensure that adequate circuit protection will exist and that feedback loops are not created.
2. Any added circuitry must be protected either by a base vehicle fuse or breaker, or by a similar device installed by the body builder.
3. When adding loads to a base vehicle protected circuit, make sure that the total electrical load thru the base vehicle fuse or breaker is less than 80% for fuses in the passenger compartment and 60% for fuses under hood or under body of the device rating to prevent nuisance fuse blows.

- Total **current** draw is the sum of the base vehicle circuit current requirement (measured with an ammeter) and the anticipated add-on components current requirements.
- **Never** increase the rating of a factory installed fuse or circuit breaker.
- For added lamp loads, the "Bulb Chart" on page 205 will aid in determination of common lamp current draws.
- It is the body builder's responsibility to use sound engineering judgment when making any modifications to a vehicle, and the body builder is responsible for ensuring that all modifications made are appropriate for the intended vehicle application.

ELECTRICAL WIRING BULB CHART

If the **total** electrical load on a factory circuit, after the addition of electrical equipment, is less than 80% of the fuse or circuit breaker protection rating in that circuit or less than the capacity of some limiting component (Switch, Relay, etc.), the items to be added can be connected directly to that circuit. For fuses located in the engine compartment, the electrical load should not exceed 60% of the fuse or circuit braker protection rating.

If the total electrical load to be added on a factory circuit exceeds the value of the circuit protection, or the value of some limiting component, the items to be added **cannot** be added directly to the circuit.

- Added electrical devices exceeding the current capabilities of the factory wiring system must be controlled through the use of a relay. The coil of the relay can be fed from the factory wiring (now acting as a signal circuit) with the added wiring providing the power feed to the added electrical device through the relay power contacts. (The relay selection is important and depends on current requirements, number of cycles expected in the relay lifetime, whether the relay is to be operated intermittently or for long periods of time, and whether the relay is exposed to weather conditions or is installed in a protected area. When the current requirements of a circuit exceed the capacity of an available relay, more than one relay can be used if the circuit is wired to split the load).
- The factory wiring should not be used as a power feed to the relay power contacts or switches. Battery power is to be supplied from the starter motor solenoid positive terminal for added circuits requiring a maximum of 30 Amps or directly from the battery positive terminal for added circuits requiring greater than 30 Amps of current.

Caution — Never use the stud on the underhood fuse panel as a junction point.

Circuit protection (fuses or circuit breakers) must be provided for all added wiring. The protection device rating should not exceed the current requirements for the add-on components and should be installed as close to the point of tapped power as possible.

Wire Gage:

1. When adding wiring, the wire gage size should be determined as follows:
- Where wire is spliced to extend a circuit, the added wire should have a gauge at least that of the circuit being lengthened.
- Where wire is being added to feed add-on devices, the **Wire Gage Table** on this page should be used. (Note: Current capacity of a given wire varies with temperature and type of insulation. The table, however, represents generally accepted values as a guide).

2. All added underhood or underbody wiring should have a thermoset insulation (such as Hypalon or Cross-linked polyethylene).

   SAE specifications J1128 type SXL, GXL or TXL.

   SAE specifications J1127 type SGX or STX for battery cables.

WIRE GAGE TABLE

Wire Gage	Maximum Current Capacity (Plastic Insulated Copper Wire)
20	10 Amps
18	15 Amps
16	20 Amps
14	25 Amps
12	30 Amps
10	40 Amps

BULB CHART

BULB TRADE NUMBER	CANDLE POWER	CURRENT @ RATED VOLTAGE
90	6	0.58 Amps @ 13.0V
94	15	1.04 Amps @ 12 .8V
97	4	0.69 Amps @ 13.5V
97A	3	0.69 Amps @ 13.5V
105	12	1.00 Amps @
161	1	0.19 Amps @14.0
168	3	0.35 Amps @ 14.0V
194	2	0.27 amps @ 14.0V
211-2	12	0.97 amps @ 12.8
212-2	6	0.74 Amps @ 13.5V
214-2	4	0.50 Amps @ 13.5V
561	12	0.97 Amps @ 12.8V
582	6	0.74 Amps @ 13.5V
631	6	0.63 Amps @ 12.8V
1076	32	1.80 Amps @ 12.8V
1156	32	2.10 Amps @ 12.8V
1157	32	2.10 Amps @ 12.8V
1157	3	0.59 Amps @ 14.0V
1157 NA	24	2.10 Amps @ 12.8V
1157 NA	2.2	0.59 Amps @ 14.0V
1178	4	0.69 Amps @ 13.5V
1195	50	3.00 Amps @ 12.5V
904	4	0.69 Amps @ 13.5
906	6	0.69 Amps @ 13.0
912	12	1.0 Amps @ 12.8
89	6	0.58 Amps @ 13.0
1095	4	0.51 Amps @ 14.0
1196	50	3.00 Amps @ 12.5V

BULB TRADE NUMBER	CANDLE POWER	CURRENT @ RATED VOLTAGE
1445	0.7	0.14 Amps @ 14.4V
1815	1.4	0.20 Amps @ 14.4V
1816	3	0.33 Amps @ 13.0V
1891	2	0.24 Amps @ 14.0V
1892	0.75	0.12 Amps @ 14.0V
1893	2	0.33 Amps @ 14.0V
1895	2	0.27 Amps @ 14.0V
4000	37.5, 60 Watts	3.14. 5.04 Amps @ 12.8V
4001	26,000	3.14 Amps @ 12.8V
4405	50,000	2.58 Amps @ 12.8V
4412	35 Watts	2.74 Amps @ 12.8V
4414	18 Watts	1.41 Amps @ 12.8V
H6054	35, 65 Watts	2.94, 5.46 Amps @ 14.0V
4415	35 Watts	2.73 Amps @ 12.8V
4416	30 Watts	2.34 Amps @ 12.8V
4435	75,000	2.34 Amps @ 12.8V
6015	27,500 Low 30,000 Hi	4.10, 4.97 Amps @ 12.8V
6014	27,500 Low 30,000 Hi	4.20, 4.97 Amps @ 12.8V
6112	40, 50 Watts	3.10. 3.91 Amps @ 12.8V
1295	50	3.0 @ 12.5
563	4	0.50
37	0.5	0.09 @ 14.0
2162	0.5	0.1 @ 14.0

ELECTRICAL WIRING BULB CHART

If the **total** electrical load on a factory circuit, after the addition of electrical equipment, is less than 80% of the fuse or circuit breaker protection rating in that circuit or less than the capacity of some limiting component (Switch, Relay, etc.), the items to be added can be connected directly to that circuit. For fuses located in the engine compartment, the electrical load should not exceed 60% of the fuse or circuit braker protection rating.

If the total electrical load to be added on a factory circuit exceeds the value of the circuit protection, or the value of some limiting component, the items to be added **cannot** be added directly to the circuit.

- Added electrical devices exceeding the current capabilities of the factory wiring system must be controlled through the use of a relay. The coil of the relay can be fed from the factory wiring (now acting as a signal circuit) with the added wiring providing the power feed to the added electrical device through the relay power contacts. (The relay selection is important and depends on current requirements, number of cycles expected in the relay lifetime, whether the relay is to be operated intermittently or for long periods of time, and whether the relay is exposed to weather conditions or is installed in a protected area. When the current requirements of a circuit exceed the capacity of an available relay, more than one relay can be used if the circuit is wired to split the load).
- The factory wiring should not be used as a power feed to the relay power contacts or switches. Battery power is to be supplied from the starter motor solenoid positive terminal for added circuits requiring a maximum of 30 Amps or directly from the battery positive terminal for added circuits requiring greater than 30 Amps of current.

Caution — Never use the stud on the underhood fuse panel as a junction point.

Circuit protection (fuses or circuit breakers) must be provided for all added wiring. The protection device rating should not exceed the current requirements for the add-on components and should be installed as close to the point of tapped power as possible.

Wire Gage:

1. When adding wiring, the wire gage size should be determined as follows:
- Where wire is spliced to extend a circuit, the added wire should have a gauge at least that of the circuit being lengthened.
- Where wire is being added to feed add-on devices, the **Wire Gage Table** on this page should be used. (Note: Current capacity of a given wire varies with temperature and type of insulation. The table, however, represents generally accepted values as a guide).

2. All added underhood or underbody wiring should have a thermoset insulation (such as Hypalon or Cross-linked polyethylene).

   SAE specifications J1128 type SXL, GXL or TXL.

   SAE specifications J1127 type SGX or STX for battery cables.

WIRE GAGE TABLE

Wire Gage	Maximum Current Capacity (Plastic Insulated Copper Wire)
20	10 Amps
18	15 Amps
16	20 Amps
14	25 Amps
12	30 Amps
10	40 Amps

BULB CHART

BULB TRADE NUMBER	CANDLE POWER	CURRENT @ RATED VOLTAGE
90	6	0.58 Amps @ 13.0V
94	15	1.04 Amps @ 12 .8V
97	4	0.69 Amps @ 13.5V
97A	3	0.69 Amps @ 13.5V
105	12	1.00 Amps @
161	1	0.19 Amps @14.0
168	3	0.35 Amps @ 14.0V
194	2	0.27 amps @ 14.0V
211-2	12	0.97 amps @ 12.8
212-2	6	0.74 Amps @ 13.5V
214-2	4	0.50 Amps @ 13.5V
561	12	0.97 Amps @ 12.8V
582	6	0.74 Amps @ 13.5V
631	6	0.63 Amps @ 12.8V
1076	32	1.80 Amps @ 12.8V
1156	32	2.10 Amps @ 12.8V
1157	32	2.10 Amps @ 12.8V
1157	3	0.59 Amps @ 14.0V
1157 NA	24	2.10 Amps @ 12.8V
1157 NA	2.2	0.59 Amps @ 14.0V
1178	4	0.69 Amps @ 13.5V
1195	50	3.00 Amps @ 12.5V
904	4	0.69 Amps @ 13.5
906	6	0.69 Amps @ 13.0
912	12	1.0 Amps @ 12.8
89	6	0.58 Amps @ 13.0
1095	4	0.51 Amps @ 14.0
1196	50	3.00 Amps @ 12.5V

BULB TRADE NUMBER	CANDLE POWER	CURRENT @ RATED VOLTAGE
1445	0.7	0.14 Amps @ 14.4V
1815	1.4	0.20 Amps @ 14.4V
1816	3	0.33 Amps @ 13.0V
1891	2	0.24 Amps @ 14.0V
1892	0.75	0.12 Amps @ 14.0V
1893	2	0.33 Amps @ 14.0V
1895	2	0.27 Amps @ 14.0V
4000	37.5, 60 Watts	3.14. 5.04 Amps @ 12.8V
4001	26,000	3.14 Amps @ 12.8V
4405	50,000	2.58 Amps @ 12.8V
4412	35 Watts	2.74 Amps @ 12.8V
4414	18 Watts	1.41 Amps @ 12.8V
H6054	35, 65 Watts	2.94, 5.46 Amps @ 14.0V
4415	35 Watts	2.73 Amps @ 12.8V
4416	30 Watts	2.34 Amps @ 12.8V
4435	75,000	2.34 Amps @ 12.8V
6015	27,500 Low 30,000 Hi	4.10, 4.97 Amps @ 12.8V
6014	27,500 Low 30,000 Hi	4.20, 4.97 Amps @ 12.8V
6112	40, 50 Watts	3.10. 3.91 Amps @ 12.8V
1295	50	3.0 @ 12.5
563	4	0.50
37	0.5	0.09 @ 14.0
2162	0.5	0.1 @ 14.0

ELECTRICAL WIRING
POWERTRAIN CONTROL SYSTEM APPLICATION

ELECTRICAL:

Guidelines for Powertrain Control System Application

SYSTEM:

All Powertrain Control Module wiring, in particular the 12A581 and 14401, must be a minimum of 2 inches from secondary ignition coil wires and at least 4 inches from the distributor, ignition coil tower, and starter motor (and its wiring) as well as 4 inches from the alternator output wiring.

These clearances apply in particular to all PCM sensor and actuator pigtail wiring.

PCM wires shall not be in the same bundle as other high-current non-PCM circuits (e.g., tachometer wire from coil to Thick Film Ignition Module (TFI), power seat/door lock/window, horn, alternator reg.) for a distance of more than 20 inches. Please refer to Electrical on page 204.

COMPONENTS:

BPP Brake Pedal Position Switch: Supplies the processor a signal for converter clutch operation. A connection here may have an adverse effect on transmission operation. Refer to the ELECTRICAL WIRING SECTION "ADDING LIGHTS OR ELECTRICAL DEVICES" (page 207) for guidelines.

CAUTION: Any connection to the PCM-V system (i.e., wiring, components) or alterations to the system may adversely affect vehicle operation (transmission and/or engine).

BARO/MAP Barometer Pressure Sensor/Manifold Absolute Pressure Sensor: Must be physically in a higher location than the intake manifold and angled with the vacuum nipple at least 4 degrees downwards. MAP vacuum line must have a downward slope to the manifold without any potential kinking or twisting. BARO has no vacuum line.

DTR Digital Transmission Range Sensor: Located on the outside of the automatic transmission at the manual lever on all models except 6.0L diesel engines. The DTR sensor provides the position of the manual lever (P, R, N, D, 2, 1) to various vehicle circuits. Do not tap into or splice any wire attached to the DTR sensor or engine and transmission damage may occur.

HO_2 Heated Oxygen Sensor: Pigtail wire must be at least 4 inches from the exhaust pipe and exhaust manifold. If necessary, a clip should be used to secure its location.

PCM Powertrain Control Module: Location must be completely shielded from weather and case grounded to sheet metal. It should be oriented such that no moisture can accumulate in the 104-way connector. The ambient temperature at the PCM module should not exceed 80° Centigrade (176° Fahrenheit). Exterior surface shall not exceed 140° F.

NOTE: The powertrain control module requires battery power to be supplied at all times to maintain the keep-alive memory. Keep this in mind when installing load disconnect switches or solenoids.

TP Throttle Position Sensor: Supplies a throttle position signal to the PCM processor. Do not tap into or splice any wire to the TP Sensor. For 6.0L diesel engines use the TPO wire, circuit 1857 (YE/WH).

VSS Vehicle Speed Sensor: The source varies by model. Sources include the Anti-Lock Brake System (ABS) module, a transmission speed sensor or the Transfer Case Speed Sensor (TCSS) for 4x4 model equipped with a manual transfer case. The vehicle speed signal is either a speed variable frequency AC signal, or a SCP Data message depending on the source. The vehicle speed signal must be operational for key sub-systems and the vehicle diagnostics to operate properly. Do not tap into or splice any VSS signal wire, sensors or engine and transmission damage may occur. For 6.0L diesel engines use VSO wire, circuit 239 (WH/OG) for the vehicle speed signal. For all other engines, installation of an additional sensor will be required.

SPEEDOMETER CALIBRATION

The vehicle speedometer receives the calibrated speed signal (sine wave) from the ABS Module or the Rear only ABS (ZWAL) Module through Circuit 679 (GY-BK) [except Mexico where the signal is received from the Central Timing (CTM) Module]. The input to the ABS, ZWAL, or CTM Module is provided by the DSS (Differential Speed Sensor) in the rear axle through Circuits 523 (R-PK) and 519 (LG-BK). If a tire change is performed, it is necessary to configure the ABS, ZWAL, or CTM Module so that the correct vehicle speed is indicated on the speedometer.

The square tooth tone wheel in the rear axle is attached to the ring gear. A variable reluctance sensor is mounted to the front section of the rear axle housing with a precise air gap with respect to the tone wheel. These two components make up the DSS (Differential Speed Sensor). The rear axle case has a fixed mounting boss for the variable reluctance sensor and therefore the air gap is non-adjustable. All factory wheels have 120 teeth for every rear axle ratio offered. If the rear axle is change, provisions for a tone wheel and the variable reluctance sensor have to be made. Calculations involving the circumference and output frequency would have to be made and are beyond the scope of this manual. It is necessary to configure the ABS, ZWAL, or CTM Module so that the correct number of tone wheel teeth are recorded in the module.

The following table gives tire sizes and revolutions per mile values. If the tire make and size is not found in the table, the tire revolutions per mile must be calculated as outline below. The tire manufacturer may be able to provide the revolutions per mile value. Once the tire revolutions per mile value is known, proceed to the Module Configuration section.

TIRE SIZE AND REVOLUTIONS PER MILE

TIRE SIZE	MAKE/ APPLICATION	REVOLUTIONS/ MILE
LT215/85R/16	FIRESTONE/ ALL SEASON	682
LT235/85R16	GOODYEAR/ ALL SEASON	655
LT235/85R16	GENERAL/ ALL SEASON	657
LT235/85R16	GOODYEAR/ ALL TERRAIN	653
LT235/85R16	GENERAL/ ALL TERRAIN	654
LT265/75R16	FIRESTONE/ ALL SEASON	655
LT265/75R16	FIRESTONE/ ALL TERRAIN	649
225/70R19.5	GENERAL/ ALL SEASON	653
225/70R19.5	GENERAL/ ALL TERRAIN	654
7.50x17	FIRESTONE	605
7.50x17	GOODYEAR	620

CALCULATING TIRE REVOLUTIONS PER MILE

Position the vehicle on level ground, load with the standard weight for the specific application, and inflate the tires to the recommended pressure (ensure that the tires are cold).

Measure the tire height from the ground to the top of the tire in inches. Ensure an accurate reading to the nearest 1/8 inch.

Divide 20,168 by the tire height in inches to get the tire revolutions per mile.

Example: Measured tire height - 33 inches

REVOLUTIONS/MILE = 20168/33 = 611

Revolutions/Mile

REQUIRED TOOLS

Rotunda New Generation Star (NGS) Tester.

Ford Service Function (FSF) Program Card Version 1.1 or newer.

The Rotunda New Generation Star (NGS) Tester and the Ford Service Function (FSF) Program Card can be obtained from Hickok Electrical Instrument Company by contacting (216) 541-8060 extension 225. If your company has an account with Rotunda, contact Rotunda - OTC Division at 1-800-533-5338.

MODULE CONFIGURATION

Ensure that all harness connectors are connected to the module that requires configuration.

Plug the NGS tester into the data link connector located below and to the right of the steering column.

Actuate the ignition switch to the RUN position (engine off).

Insert the Ford Service Function (FSF) Program Card into the Rotunda New Generation Star (NGS) Tester.

Select SERVICE BAY FUNCTIONS using the trigger button.

Scroll the highlight bar down to the module requiring configuration (see the Speedometer Calibration section). For the ZWAL Module, use the ABS option.

Press the trigger button to select the module and select the TIRE SIZE/AXLE RATIO CONFIGURATION using the trigger button.

The current configuration cannot be read on this vehicle line. Press the trigger button to continue.

Select TIRE SIZE by pressing the trigger button. Use the dial to select the custom revolutions/mile entry and press the trigger button. Enter two zero's using the number buttons and enter the 3-digit revolutions/mile value for the desired tire using the number buttons.

Using the dial, select TONE RING SIZE and press the trigger button. Use the dial to select the rear axle ring gear size (10.25 in, 10.5 in or 11.25 in) and press the trigger button. If the preceding options are not present, use the dial to select the custom number of teeth and press the trigger button. Enter two zero's using the number buttons and enter the 3-digit tone wheel teeth value using the number buttons. Unless the axle has been changed, enter 120 as the number of tone wheel teeth.

Using the dial, select OPTION and press the trigger button. Use the dial to select N/A and press the trigger button.

Using the dial, select VEHICLE and press the trigger button. Use the dial to select F250/350 and press the trigger button.

Press done (numeric 8 button) and the module will be programmed with the above data entered. To reprogram, repeat the above procedure.

ELECTRICAL WIRING
ADDING LIGHTS OR ELECTRICAL DEVICES

Although there are many points in the truck electrical system to connect additional circuits certain connection points are recommended for reliability and convenience. This section defines the recommended connection points for each Ford Truck model and the maximum electrical loads allowable. CAUTION: Improper electrical tie-ins may affect vehicle operation (e.g., engine transmission).

After all electrical or vehicle modifications, perform the on-board diagnostics procedures as described in the powertrain control/ emissions diagnosis manual to clear all diagnostic trouble codes (DTCs). Road test vehicle and rerun the on-board diagnostics to verify that no DTCs are present. If DTCs are generated, perform the appropriate diagnostic procedures and repairs. Vehicle operation (engine/transmission) may be affected if DTCs are not serviced.

Alternative connections or wiring practices are not recommended as certain modifications may result in other circuits becoming non-functional. Disconnect the battery negative (ground) cable and remove it from the battery carrier prior to any vehicle modification. Upon completion of body or equipment installation, all wiring should be checked for proper routing, etc. to preclude electrical shorts upon reinstallation of the battery negative cable.

Do not splice into the Powertrain System (PCM-V). Connecting to any component or wires to this system may adversely affect Engine/ Transmission operation.

LIGHTS CONTROLLED BY HEADLAMP SWITCH

The head lamp switch used on the F-150, Super Duty F-Series and E-Series vehicles employs one main 30A maxi fuse for the head lamp system. The left- and right-hand low beam lamps are then fused individually using a 10A fuse located in the instrument panel fuse box (see schematic on page 208) the exterior lamps are fused using a 15A fuse while the interior lamps are fused using a 10A fuse located in the instrument panel fuse box (see schematic on page 208). A connection to any circuit in the system controlled by the head lamp switch must be done using an auxiliary relay. A marker lamp relay circuit 962 for SUB additions is provided for convenience as standard equipment on chassis cabs, optional on pickups. Do not connect to other OEM wires.

E-SERIES

Rear Lights — Splice into circuit #14 (Brown) in crossover harness ar rear of vehicle.

Front Lights — Splice into circuit #14 (Brown) in engine compartment 12A581 wire assembly along right or left fender apron.

LIGHTS CONTROLLED BY STOP LAMP SWITCH AND TURN INDICATOR SWITCH

NOTE: Splicing into the stop lamp switch on vehicles with Electronically Controlled Transmissions can interfere with the proper functioning of PCM, speed control, and anti-lock brake electronic modules. This can:

- Affect EFI engine idle speed quality.
- Do not delete or deactivate the Center High Mount Stop Lamp unless it will be blocked by second unit body.
- Prevent the Powertrain Control Module torque converter clutch from applying at throttle openings less than half throttle.
- Deactivate anti-lock brake system operation
- Prevent the speed control from disengaging upon braking.

If your application involves splicing into the stop lamp switch of a Powertrain Control Module equipped vehicle, please consult the Truck Body Builders Advisory Service website at www.fleet.ford.com/truckbbas/ to obtain a copy of QVM Bulletin #10.

The stop lamp switch that is in use on Ford trucks is a mechanical switch operated by brake pedal. It is designed for maximum loads usually less than the fuse or circuit breaker in the circuit but ample for normal stop lamp loads. The maximum load is 15 amps. Under no circumstances are total loads in excess of this value permissible. (See schematic on page 203).

F-150, SUPER DUTY F-SERIES AND E-SERIES MODELS

Ford trucks are released with a mechanical stop lamp switch mounted on the brake pedal arm for E-Series (mounted on the pedal pin and master cylinder push rod for F-150 and Super Duty F-Series). This switch has a maximum allowable electrical load of 15 amps. If only stop lamp function is desired for the added lights, splice into the circuit #511 light green wire for E-Series. F-150 and Super Duty F-Series between the stop lamp switch and the turn indicator switch. This circuit is provided as standard equipment and is located at the rear of the vehicle.

If both turn signal and stop lamp function are desired for the added lights, splice into the tail lamp loom (circuit #64 dark green for F-150, Super Duty F-Series and E-Series right-hand lights and circuit #52 yellow for F-150, Super (See note below). These circuits are provided as standard equipment and are located at the rear of the vehicle. (See Figure B, Page 199 and page 202 and schematic on page 203).

NOTE:

1. The turn signal switch used on some light trucks has a maximum rated current of 6.5 amps for right and left turning functions and 10.4 amps for stop lamp function. Do not exceed these values on the turn signals.
2. The Super Duty F-Series utilizes an electronic flasher (F65B-13550-AA) for the turn signal and emergency flasher system.

ADDED LIGHTS OR ACCESSORIES CONTROLLED BY ADDED SWITCHES

This section describes the connection points for added electrical accessories when these accessories are to be controlled by added switches not a part of the Ford-released vehicle. The added switches and wiring must have sufficient electrical capacity for the accessory load and must be protected by appropriate fuses or circuit breakers. Also, added current draw must not cause total loads to exceed capabilities of the base vehicle wiring.

RADIO FREQUENCY INTERFERENCE (RFI)

During modifications to the vehicle, manufacturers, service technicians, owners and users should take the necessary precautions to maintain the RFI integrity of components. (Both the United States and Canada have RFI regulation in effect). Precautionary procedures and components listed below are examples and do not necessarily represent a complete list.

1. All components required to suppress RFI emissions, which are removed during service, repair, or completion of the vehicle, must be reinstalled in the manner in which they were installed by Ford.
2. Do not modify or change any RF device in a manner not expressly approved by Ford Motor Company.
3. Shields on distributor and ignition coil must remain installed.
4. Replacement spark plugs, ignition wires, ignition coils, distributor caps and distributor rotor must be equivalent in their RFI suppression properties to original equipment.
5. Electrical grounds on all components must be retained.
6. Metallic components installed on the body or chassis must be grounded to the chassis.
7. Electrical circuits added to the vehicle should not be installed near the high tension ignition components.
8. Only “static conductive” accessory drive belts should be used.
9. Fan, water pump, power steering and other belts should be of the OEM type or equivalent that will not build up a static electrical charge.
10. For any completed vehicle, additional measures may be needed to adequately suppress RFI emissions.

CHECK ENGINE WARNING LIGHT

The check engine warning light is a device required on certain vehicles to indicate malfunctions of the Powertrain Control Module. For all vehicles except E-Series Super Duty Stripped Chassis (which is not equipped with a dashboard), if a warning light is required, it is Ford installed and operational. The light is also required for all gasoline powered E-Series Super Duty Stripped Chassis vehicles. The warning lamp is included in the supplied instrument cluster, located in the dunnage box. It should be recognized that this light is a requirement of Emission Certification.

If an alternate instrument cluster is utilized, the final stage manufacturer must install an operational light in the dashboard. This light must glow amber and display the acronym message, “SERVICE ENGINE SOON.”

Once the light has been completed by the final stage manufacturer, proper function can be determined by turning the key to the on position. The light should come on prior to engine cranking and go out when the engine starts. If the light does not come on as above, refer to Section 14 (Quick test step 7 — Diagnostics by Symptom) of Volume H (*Engine and Emission Diagnostic Manual*) of the *Car and Truck Service Manual* for diagnostic procedure.

NOTE: The final stage manufacturer is responsible for ensuring that final vehicle configuration meets all applicable regulatory requirements.

ELECTRICAL WIRING
ADDING LIGHTS OR ELECTRICAL DEVICES

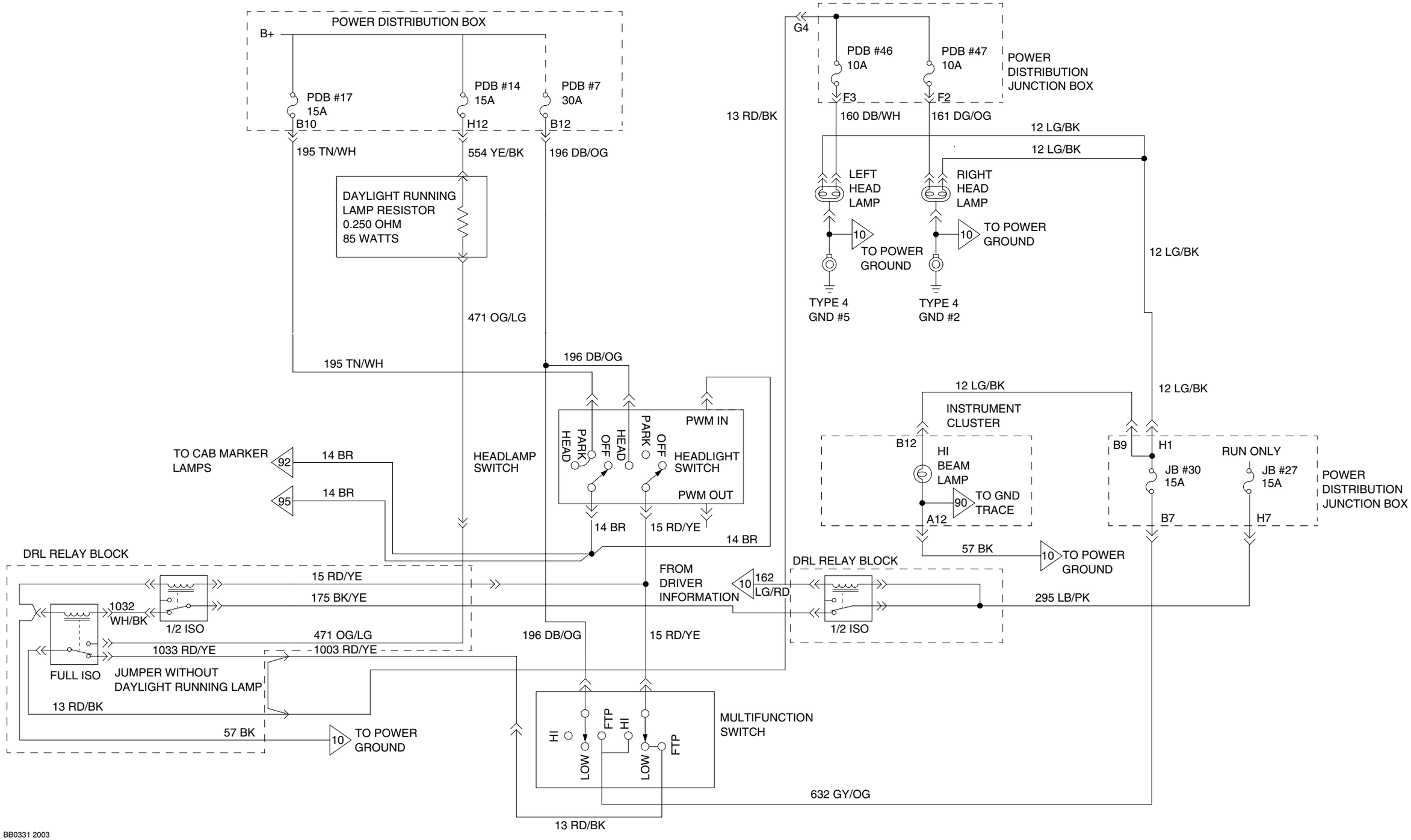

DESIGN RECOMMENDATIONS
PICKUP BOX REMOVAL/ALTERATIONS

PART I

Introduction

The following information is presented in three parts for vehicle alterers who intend to remove pickup boxes from certain Rangers and Super Duty F-Series pickup trucks, and install aftermarket second unit bodies on these vehicles. For vehicle alterers in California, see important information on page 213 concerning alteration of vehicles with a GVWR of 8500 lb or less for sale, registration, or use in California.

Part I details those Ranger and Super Duty F-Series pickup models that may be altered by removal of the pickup box and installation of aftermarket second unit bodies and indicates where specific questions should be directed. Part II provides information concerning the obligations and responsibilities of vehicle alterers with respect to United States and Canada Motor Vehicle Safety Standards (F/CMVSS). Part III provides information for vehicle alterers with respect to United States, California, and Canada exhaust emissions, evaporative emissions and RFI requirements, and California requirements with regard to fuel vapor recovery.

RANGER REGULAR CAB PICKUP BOX REMOVAL WILL AFFECT COMPLIANCE WITH THE DYNAMIC PERFORMANCE REQUIREMENTS OF F/CMVSS NO. 214 SIDE IMPACT PROTECTION FOR VEHICLES WITH A GVWR OF 2722 KG (6000 LB) OR LESS.

Vehicle alterers who intend to modify vehicles, as described above, may use the information and conditions provided herein to assist them in determining whether modified vehicles comply with applicable regulatory requirements. Alternatively, the vehicle alterer may desire to employ other limits or conditions than those provided herein. In any case, it is the responsibility of the vehicle alterer to assure compliance and certification of the altered vehicle to the applicable safety and/or emissions (including noise and RFI) requirements. Specific questions concerning compliance and/or certification to safety standards and emissions and fuel economy regulations should be directed to the vehicle alterer's legal counsel or the United States National Highway Traffic Safety Administration (FMVSS and Federal Fuel Economy Standards and requirements), the Canada Ministry of Transport (CMVSS, emissions, and noise regulations), the Canada Department of Communications (Canadian RFI regulations), the United States Environmental Protection Agency (EPA) (United States emission requirements) or the California Air Resources Board (California emissions and fuel vapor recovery requirements), and the vehicle noise emission control authorities, if any, in the state and locality in which the vehicle is sold.

If you have technical, product-related questions concerning some aspect of the vehicle alteration, a representative of Ford Motor Company will be happy to talk with you. Please contact your regional sales office or phone the Ford Truck Body Builders Advisory Service directly at 1-877-840-4338.

Models Available for Pickup Box Removal

The models listed in Table A, page 214 (Super Duty F-Series) and Table A, page 215 (Ranger SuperCab), may be altered by removing the pickup boxes and installing aftermarket second unit bodies. For Ranger SuperCab vehicles available for pickup box removal, Ford Motor Company specifies that they shall be equipped with front and rear stabilizer bars. Limitations on the second unit bodies that may be installed, as well as other vehicle conditions, are also specified in Table A, pages 214-215 and in the Safety/Emissions section beginning on page 41.

PART II

Information Concerning United States and Canada Safety Standards

The vehicle alterer is responsible for certifying the altered vehicle pursuant to Title 49 of the Code of Federal Regulations Sections 567.7 and 568.8 in the United States, or pursuant to Section 9 of the Canadian Motor Vehicles Safety Regulations in Canada. As outlined in these requirements, the vehicle alterer must ascertain which F/CMVSS are affected by the alteration, and subsequently provide certification that the altered vehicle conforms to all affected safety standards. In the information that follows, Ford has endeavored to provide sufficient instructions and guidelines to the vehicle alterer for certifying that the vehicle conforms to all F/CMVSS affected by the vehicle alteration. Information pertaining to Certification Labeling Requirements for the altered vehicle is outlined in page 211.

Federal and Canadian Motor Vehicle Safety Standards Compliance

Conformity to the following FMVSS (FMVSS) and Canadian Motor Vehicle Safety Standards (CMVSS) are affected by the removal of the pickup box and rear bumper and installation of an aftermarket second unit body:

F/CMVSS No. 105[5]	— Hydraulic Brakes
F/CMVSS No. 108	— Lighting Equipment
F/CMVSS No. 111	— Rear view Mirrors
F/CMVSS No. 135[5]	— Light Vehicle Brakes
F/CMVSS No. 204[1]	— Steering Control Rearward Displacement
F/CMVSS No. 208[2]	— Occupant Crash Protection
F/CMVSS No. 212[3]	— Windshield Mounting
F/CMVSS No. 214[3][4]	— Side Impact Protection
F/CMVSS No. 219[3]	— Windshield Zone Intrusion
F/CMVSS No. 301[3]	— Fuel System Integrity

For Motor Company represents that, in the case of a Ranger SuperCab or Super Duty F-Series pickup truck listed in Table A, page 214 (Super Duty F-Series) and Table A, page 215 (Ranger SuperCab), this vehicle, as altered, will conform to the requirements of the previously listed safety standards, provided the vehicle is altered only by the removal of the pickup box (including optional equipment attached to the pickup box) and rear bumper (if so equipped), and the installation of an aftermarket Second Unit Body (SUB) in accordance with the following conditions:

1. The following lighting components must be designed and installed on the altered vehicle in accordance with the requirements of F/CMVSS No. 108, Lamps, Reflective Devices, and Associated Equipment.

Tail Lamps*	Rear Side Marker Lamps
Stop Lamps*	Front and Rear Identification
License Plate Lamps*	Lamps (for vehicles over 80 inches in width)
Back-Up Lamps*	Front and Rear Clearance
Rear Turn Signal Lamps*	Lamps (for vehicles over 80 inches in width)
Rear Side Marker Lamps*	Center High Mounted Stop
Rear Side Reflex Reflectors*	Lamp (if second unit body
Reflectors*	blocks view of the CHMSL
	on the back of the cab
	another CHMSL must be
	added)

The items of lighting equipment (including wiring and power supply) on the cab of the pickup truck must not be removed, modified, replaced, or altered. Further, the second unit body installed by the vehicle alterer must not impair the visibility and conformity to the photometric requirements of the lamps and reflective devices installed on the cab of the pickup truck.

2. The weight (in pounds) of the Second Unit Body (SUB) installed must be within the range specified in Tables A, pages 214-215 corresponding to the particular pickup truck model and not greater than the weight (in pounds) calculated using the following formula:

   SUB WEIGHT LIMIT = Unloaded Vehicle Weight (UVW) – Original Equipment Manufacturer (OEM) Curb Weight + Pickup Box + Options Removed.

Super Duty F-Series

- Step Bumper – 74 lb.
- Pickup Box – see Table A, page 214
- Spare Wheel and Tire – see Table B, page 214

Ranger SuperCab

- Step Bumper – 37 lb.
- Pickup Box – see Table A, page 215
- Spare Wheel and Tire – see Table B, page 215

NOTES —

[1] For vehicles with a GVWR of 10,000 lb or less and an unloaded vehicle weight of 5500 lb or less.

[2] Injury criteria is applicable to vehicles with a GVWR of 8500 lb or less and an unloaded vehicle weight of 5500 lb or less.

[3] Applicable to vehicles with a GVWR of 10,000 lb or less.

[4] Dynamic Performance Requirements apply to MPV, Truck, or a Bus with a GVWR of 2722 Kg (6000lb) or less for FMVSS only.

[5] Standard 135 applied to vehicles with a GVWR of 3500 Kg (7716 lb) or less. Standard 105 applies to vehicles with a GVWR over 3500 Kg (7716 lb).

* These lamps and reflectors are available from Ford in the form of rear lamp assemblies and are the same as those installed on Ford chassis cab models.

DESIGN RECOMMENDATIONS
PICKUP BOX REMOVAL/ALTERATIONS

PART II (Cont'd)

Example

A vehicle alterer wants to remove the pickup box and rear step bumper from a Super Duty F-250 Regular Cab (4x4), 137-inch WB model with a 5.4L engine, 4R100 transmission, and air conditioning having a curb weight of 6200 lb and install a 600-pound Second Unit Body (SUB).

First, Table A (on page 214) specifies that the maximum SUB weight is 1800 lb. Since the SUB weight is 600 lb, this condition is satisfied.

Second, the SUB weight must not exceed the SUB WEIGHT LIMIT calculated below:

SUB WEIGHT LIMIT = Maximum Complete Unloaded Vehicle Weight (UVW) minus the unloaded vehicle weight as delivered (OEM) curb weight plus pickup box weight removed plus weight of removed options.

= 6900 – 6200 + 380 + 74

= 1154 lb

The 600 lb SUB is less than 1154 lb and, accordingly, may appropriately be installed as planned.

The vehicle alterer must either select a lighter weight SUB, reduce the OEM accessory weights for the vehicle, or both if the SUB is heavier than the maximum limit.

1. OEM Curb Weight includes Base Vehicle Weight (with full fuel), engine and transmission weight, and all OEM accessory weights ordered or installed (Refer to the appropriate *Truck Source Book* or the CD version of this publication for weight data).
2. Options removed include step bumpers or similar OEM options **permanently** removed from the vehicle.
3. The center of gravity height and overall height of the second unit body installed by the alterer must not exceed the values specified in Table A, pages 214-215 corresponding to the particular pickup model. Center of gravity height and overall height of the second unit body are measured from the top surface of the frame at the rear of the cab.
4. The altered vehicle's unloaded vehicle weight (see Definitions in Safety/Emission section) must not exceed the values designated in Table A pages 214-215 corresponding to the pickup truck's model and non-California engine-transmission combination.
5. These instructions must be followed in the vehicle alteration:

- The following components, as installed by Ford Motor Company, are not to be removed, relocated, altered, or modified in any way:
  - Steering column, steering shaft, steering wheel, and related structural components and attachment hardware
  - Windshield and windshield mounting system
  - Cab and front end structural components, including the roof, pillars, cowl, cowl reinforcements, hood, doors, fenders, hood restrictors and apron reinforcements, and frame and frame reinforcements
  - Radio antenna
  - Doors and hood mounting, hinging, and latching systems
  - Hood and fender ornamentation
  - Fuel tank and attachment hardware, including sending unit and vapor valve, fuel tank shield, and in-tank electric fuel pump (for gasoline engine only)
  - Fuel lines, routing, and attachments, excluding fuel filler cap, filler pipe, filler hose(s), and filler system attachment hardware, which must be removed and replaced
  - Vapor line(s) and carbon canister(s)
  - Fuel pump
  - Fuel filter and attachment
  - Air cleaner assembly
  - Safety belts
  - Front seat head restraints
  - Electrical grounds on all components (must be retained)
  - The Powertrain Control Module (PCM), and
  - Catalyst and Exhaust System.
- Any alteration or modification made to the vehicle, as manufactured by Ford Motor Company, and any components or structure installed by the vehicle alterer must not result in steering column rearward displacement of more than 5 inches (as defined in F/CMVSS No. 204)[1]; no modification to the Hydraulic Brake System that would affect compliance to F/CMVSS No 105 or 135[5]; an increase in injury potential for front outboard seating positions (as defined in F/CMVSS No. 208)[2]; any additional loss of windshield retention (as defined in F/CMVSS No 212)[3]; any change in the performance requirements of F/CMVSS 214[3][4]; any penetration of the inner surface of the windshield or intrusion into the protected zone (as defined in F/CMVSS No. 219)[3]; or loss of fuel system integrity (as defined in F/CMVSS No. 301)[3]; when the vehicle is tested in any manner specified by applicable provisions of F/CMVSS Nos. 105[5], 135[5], 204[1], 208[2], 212[3], 214[3][4], 219[3], and 301[3], respectively.

NOTE: Federal Motor Vehicle Safety Standard (FMVSS) and Canadian Motor Vehicle Safety Standard (CMVSS) No 204 are not appliable to a vehicle with an unloaded vehicle weight greater than 5500 lb. F/CMVSS No. 208 injury criteria are applicable only to vehicles with a GVWR of 8500 lb or less and an unloaded vehicle weight of 5500 lb or less. Conformity to Federal Motor Vehicle Safety Standard (FMVSS) and Canadian Motor Vehicle Safety Standard (CMVSS) No. 212 and 219 for vehicles having a gross vehicle weight rating (as defined in 49 CFR, Part 571.3) no greater than 10,000 lb, is established for representative vehicles at a vehicle weight provided by Sections S6.1(b) and S7.7(b) of FMVSS No. 212 and 219, respectively, and provided by Sections 5.1 and 8 of CMVSS No. 212 and 219, respectively.

- The second unit body installed shall be mounted securely and so designed that when the altered vehicle is impacted in any manner specified by applicable provisions of F/CMVSS No. 212[3] and 219[3], second unit body deformation or movement relative to the frame does not result in any separation or loss of body attachment to the frame.
- The second unit body installed and the required fuel system components (identified below) shall be located and mounted as follows:
  - The second unit body shall be mounted securely and is so designed that when the altered vehicle is tested in any manner specified by applicable provisions of F/CMVSS No. 301[3]:
    - (a) Second unit body components shall not contact any fuel system component (other than at the points where the fuel system is permanently attached to the second unit body) and
    - (b) Second unit body deformation or movement relative to the frame shall not cause any fuel system component to be penetrated, disconnected, or otherwise damaged.
  - The rear end of the second unit body (excluding the rear bumper) installed shall not extend beyond (overhang) the rear edge of the vehicle frame or frame extension. Any extension of the vehicle frame must be constructed and attached so as to perform as a continuation of the vehicle frame when the altered vehicle is tested in any manner specified by applicable provisions of F/CMVSS No. 301[3].
  - See the Design Recommendations, Second Unit Body (SUB) attachment section of this book beginning on page 218 for additional information.
  - The fuel filler cap, filler pipe, filler hose(s), and filler system attachment hardware for vehicles with diesel engines and for vehicles with gas engines shall be installed, as shown on Super Duty F-Series, page 175, and shall be securely retained to remain intact when the vehicle is tested in any manner specified by applicable provisions of F/CMVSS NO. 301[3].

NOTES —

[1] For vehicles with a GVWR of 10,000 lb or less and an unloaded vehicle weight of 5500 lb or less.

[2] Injury criteria is applicable to vehicles with a GVWR of 8500 lb or less and an unloaded vehicle weight of 5500 lb or less.

[3] Applicable to vehicles with a GVWR of 10,000 lb or less.

[4] Dynamic Performance Requirements apply to MPV, Truck, or a Bus with a GVWR of 2722 Kg (6000lb) or less for FMVSS only.

[5] Standard 135 applied to vehicles with a GVWR of 3500 Kg (7716 lb) or less. Standard 105 applies to vehicles with a GVWR over 3500 Kg (7716 lb).

DESIGN RECOMMENDATIONS
PICKUP BOX REMOVAL/ALTERATIONS

PART II (Cont'd)

- The front end of the second unit body installed shall be located at least three inches rearward of the rearmost point of the cab on Super Duty F-Series, and at least 1.4 inches rearward of the rearmost point of the cab on Ranger SuperCab models.
- The vehicle, as produced by Ford, meets the Center High Mounted Stop Lamp (CHMSL) requirements of Standard 108, Lighting. Compliance to these criteria may be affected by the installation of a Second Unit Body (SUB), if the SUB blocks the view of the CHMSL mounted on the back of the cab. When this happens, the subsequent manufacturer must install a CHMSL on the SUB that meets FMVSS 108. An electrical feed for installation of a CHMSL on the SUB is provided and is located inside the rearmost crossmember near the end of the left frame rail on the Super Duty F-Series models. For the Ranger, directions are given in Ford Bulletin Q-28, CHMSL – Precautions and Guidelines for Adding or Locating.
- The vehicle, as produced by Ford, meets F/CMVSS No. 111. Compliance to F/CMVSS No.111 may be affected, however, by removal of the pickup box and installation of a Second Unit Body (SUB), even though the mirror system has not been altered. A discussion of compliance, with respect to each mirror type, follows:
  - Sail-Mounted Type Outside Mirror on Super Duty F-Series or Ranger Pickup. Provided the mirrors, driver's seat, and cab are not altered, the mirror system will continue to meet Standard No. 111. if the overall width of the Second Unit Body (SUB) is no wider than the pickup box, and if the view of the roadway behind the vehicle through the inside mirror is not totally blocked off. If the SUB blocks the view through the inside mirror, a flat glass mirror is required on the passenger's side in place of the convex mirror on vehicles to be sold in the United States. Vehicles for sale in Canada may be equipped with the convex mirror on the passenger's side when the SUB blocks the view through the inside mirror. If the SUB is wider than the pickup box, both the driver's side and passenger's side mirrors may have to be replaced with mirrors providing a wider view to the rear.
  - Trailer Tow Mirrors on Super Duty F-Series. These mirrors will continue to meet Standard No. 111, provided the mirrors, the driver's seat, and the cab are not altered.
- If the front bumper and bumper mounting system are removed temporarily, the front bumper and bumper mounting system must be reinstalled in accordance with the instructions provided in the *Ford Truck Service Manual*. If the front bumper and bumper mounting system are replaced, the replacement front bumper and bumper mounting system must not result in: steering column rearward displacement of more than 5 inches (as defined in F/CMVSS No. 204)[1]; any increases in injury criteria (as defined in F/CMVSS No. 208)[2]; any additional loss of windshield retention (as defined in F/CMVSS No. 212)[3]; any penetration of the inner surface of the windshield or intrusion into the protected zone (as defined in F/CMVSS No. 219)[3]; or, loss of fuel system integrity (as defined in F/CMVSS No. 301[3]), when the vehicle is impacted in any manner specified by applicable provisions of those standards.

NOTE: The second unit body added by the vehicle alterer may have to conform to other safety standards as well. For example, any glazing used in the second unit body must conform to F/CMVSS No. 205, Glazing Materials. Additionally, if the second unit body is equipped with any passenger seating positions, the following safety standards may be applicable as well:

F/CMVSS No. 206	— Door Locks and Retention
F/CMVSS No. 207	— Seating Systems
F/CMVSS No. 208[2]	— Occupant Crash Protection
F/CMVSS No. 209	— Seat Belt Assemblies
F/CMVSS No. 210	— Seat Belt Anchorages
F/CMVSS No. 214[3][4]	— Side Impact Protection
F/CMVSS No. 302	— Flammability of Interior Materials

With respect to the second unit body installed and the above-mentioned safety standards, it is the responsibility of the vehicle alterer to assure conformity with all applicable requirements.

It is the responsibility of the vehicle alterer to determine which other safety standards, if any, their vehicles must comply with.

NOTE: See statements for F/CMVSS No. 105 and 135, Hydraulic Brake implications of modifications/alterations to completed vehicles, including pickup box removal vehicles on pages 56-63 of the Safety/Emission section.

Certification Labeling Requirements

For altered vehicles in the United States, the vehicle alterer is required to affix an additional label containing the information shown on page 64 of the Safety/Emission section.

NOTE: The safety standard certification label, which is affixed to the driver's door latch pillar of the pickup truck, by Ford Motor Company must not be removed.

For altered vehicles in Canada, the vehicle alterer is required to affix a label containing the information shown on page 65 of the Safety/Emission section.

NOTE: A vehicle alterer may be a manufacturer according to the definition of manufacturer contained in the Canadian Motor Vehicle Safety Act.

PART III

Information concerning United States and Canada Exhaust Emissions, Evaporative Emissions, RFI and Noise, and California Fuel Vapor Recovery Requirements. Refer also to pages 43-51 of the Safety/Emission section.

A. Exhaust and Evaporative Emission Requirements

Ranger SuperCab completed trucks have been certified to the applicable U.S. Federal, California, or Canadian exhaust and evaporative emissions requirements. See page 45 for important information concerning alteration of vehicles with a GVWR of 8500 lb or less that is for sale, registration, or use in California. Federal law specifies that a light-duty truck is any vehicle with a GVWR of 8500 lb or less that has a vehicle curb weight of 6000 lb or less, and a basic vehicle frontal area of 45 square feet or less, which is designed primarily for transporting property (or is a derivative of such a vehicle), or is designed primarily for transporting persons and has a capacity of more than 12 persons, or is available with special features enabling off-street or off-highway operation and use.

All heavy-duty engines (in vehicles having a GVWR of more than 8500 lb for the United States and Canada) have been certified to the applicable U.S. Federal or Canadian exhaust or California exhaust and evaporative emissions requirements for heavy-duty engines. *It is the responsibility of the vehicle alterer to assure compliance of the altered vehicle with the applicable emission requirements.*

Ranger SuperCab and Super Duty F-Series pickup truck models listed in Tables A on pages 214-215, if altered by removal of the pickup box (including items attached to the pickup box), rear bumper (if so equipped), and installation of a second unit body, *may* not require recertification to applicable Federal, California, or Canadian emissions requirements if the following conditions are satisfied:

1. None of the engine emission control hardware furnished with the pickup truck is deleted, modified, or rendered inoperable. A listing of such hardware is provided in the Emission Control Modifications section on page 45 of the Safety/Emission section of this book.

NOTES —

[1] For vehicles with a GVWR of 10,000 lb or less and an unloaded vehicle weight of 5500 lb or less.

[2] Injury criteria is applicable to vehicles with a GVWR of 8500 lb or less and an unloaded vehicle weight of 5500 lb or less.

[3] Applicable to vehicles with a GVWR of 10,000 lb or less.

[4] Dynamic Performance Requirements apply to MPV, Truck, or a Bus with a GVWR of 2722 Kg (6000lb) or less for FMVSS only.

DESIGN RECOMMENDATIONS
PICKUP BOX REMOVAL/ALTERATIONS

PART III (Cont'd)

Further, vehicles sold for principal use in high altitude areas must comply with the High Altitude Regulations.

1. A copy of the appropriate *Ford Truck Owner's Guide* and *Warranty Facts Booklet* is installed in the altered pickup truck prior to sale to the ultimate purchaser in order to provide emission systems warranty information and maintenance schedules. **Note**: Whether Ford Motor Company or the alterer is responsible for emission warranty claims depends on, among other things, whether the vehicle failed to comply with applicable warranty provisions because of modifications made by the alterer or because of the original design and manufacture of the vehicle.
2. The Super Duty F-Series fuel filler kit that is supplied with the vehicles ordered with pickup box delete option number 66D or available through Ford dealers, P/N F81Z-9B149-FA (gasoline) or -GA (diesel), must be installed as shown on pages 175-176. Filler system attachment hardware for Ranger SuperCab in kit #IL5Z-9B149-AA is installed as shown on page 216.
3. The alterer does not exceed the limitations listed on Safety/Emission page 45 under "Curb Weight and Frontal Area Restrictions".

Questions concerning requirements and policies, with respect to alterers of completed vehicles, should be directed to body builder's legal counsel, the Environmental Protection Agency, or the California Air Resources Board.

Note: If the weight of the altered vehicle exceeds the maximum unloaded vehicle weight specified in Table A pages 214-215, corresponding to the particular pickup truck model and engine combination, the vehicle alterer is required to certify the vehicle to: F/CMVSS 105 or 135[5], Brakes; F/CMVSS No. 204[1], Steering Control Rearward Displacement; F/CMVSS No.212[3], Windshield Mounting; F/CMVSS No. 214[3][4], Side Impact Protection; and F/CMVSS 219[3], Windshield Zone Intrustion; and F/CMVSS No. 301[3], Fuel System Integrity, in addition to compliance with any other F/CMVSS affected by the vehicle's alteration.

4. For a pickup truck have a GVWR of 10,000 lb or less and catalyst equipped. For vehicles other than those for sale, registration or use in California, the alterer does not add more than 500 lb to the maximum unloaded vehicle weight specified in Table A pages 214-215 corresponding to the particular pickup model.
   (a) **IMPORTANT**: Some of the preceding conditions are based, in part, on statements made by C. N. Freed of the Environmental Protection Agency (EPA) in a letter of July 13, 1979 to M. H. McBride, legal counsel of the Recreation Vehicle Industry Association. That letter explained EPA's policy concerning alterers of complete 1980 and later model year light-duty trucks in the context of EPA's Advisory Circular No. 64 – a March 7, 1977 publication that provides guidance on the need for separate certification of vehicles modified after original manufacture, but prior to sale and delivery to the ultimate purchaser. The maximum second unit body weights provided in tables on pages 214-215 are calculated in accordance with the definition of "maximum vehicle weight" provided in the July 13, 1979 letter.

   The referenced letter provides that alterers of complete light-duty trucks need not recertify such vehicles for emission control purposes if:

   1) the altered vehicles conform, in all material respects, to the design specifications in the original manufacturer's application for certification, and
   2) the weight of the altered vehicle, including the weight of fuel at nominal tank capacity, is no more than 500 lb above the "maximum vehicle weight."

The letter further states that no frontal area restrictions will apply to alterers who comply with conditions (a) and (b) above. Alterers who do not comply with these conditions will be considered manufacturers under the Clean Air Act and will be required to assure that the altered vehicles are certified.

Questions concerning EPA's policies, with respect to alterers of completed vehicles, should be directed to legal counsel or the Environmental Protection Agency.

   (b) **NOTE**: If the weight of the altered vehicle exceeds the maximum unloaded vehicle weight specified in Table A, corresponding to the particular pickup truck model and non-California engine-transmission combination, the vehicle alterer is required to certify the vehicle to: F/CMVSS No. 105 or 135, Brakes; F/CMVSS No. 204, Steering Control Rearward Displacement (if the unloaded vehicle weight is 5500 lb or less); F/CMVSS No. 208, Occupant Crash Protection (if the GVWR is 8500 lb or less and the unloaded vehicle weight is 5500 lb or less); F/CMVSS No.212, Windshield Mounting; F/CMVSS No. 214[3][4], Side Impact Protection; F/CMVSS No. 219, Windshield Zone Intrusion; and F/CMVSS No. 301, Fuel System Integrity, in addition to compliance with any other F/CMVSS affected by the vehicle's alteration.

See page 213 for important information concerning alteration of vehicles rated at 8500 lb GVWR or less, for sale, registration, or use in California.

B. High Altitude Emissions

United States Environmental Protection Agency regulations contain unique emission certification requirements for trucks that will be sold or delivered to customers for principal use above 4,000 feet (1219 meters). Certain new vehicles cannot be sold to customers who intend to use them principally at high altitudes. TO AVOID ANY QUESTION OF CERTIFICATION COVERAGE, ORDERS SHOULD SPECIFY WHETHER A HIGH ALTITUDE EMISSION SYSTEM OR A NON-HIGH ALTITUDE EMISSION SYSTEM IS REQUIRED.

C. California Fuel Vapor Recovery

California regulations require that vehicle fuel systems be designed to accommodate a new vapor-recovery fueling nozzle, including unobstructed access to the fill pipe. Fuel filler pipes, installed per Super Duty F-Series, pages 175-176, will comply with the "Specifications for Fill Pipes and Openings of Motor Vehicle Fuel Tanks," referenced in Title 13 California Administrative Code, providing no part of the second unit body, as installed, intrudes within a 10-inch radius cylinder which has its axis parallel to the ground, passing through point "Z" and extends outward from the Ford fuel pipe housing component shown in the figure on Super Duty F-Series, pages 175-176. Fuel filler pipes, installed using the alternate bracket shown on the figures on Super Duty F-Series, pages 175-176, will comply with the above California vapor recovery regulations, provided the second unit body installed does not interfere with the access zone.

D. Radio Frequency Interference (RFI)

1. UNITED STATES RADIO FREQUENCY INTERFERENCE (RFI) INFORMATION

   Devices that emit radio frequency (RF) energy, such as AM/FM radios and radio-controlled theft alarms, marketed for sale or use in the United States, are subject to the rules and regulations of the Federal Communications Commission (FCC) 47 C.F.R. Parts 2 and 15 (1992).

   These rules specify the following conditions of operation:

   > This device complies with Part 15 of the FCC rules. Operation is subject to the following two conditions: (1) This device may not cause interference, and (2) The device must accept any interference received, including interference that may cause undesired operation.

   In addition, the FCC's rules may require the device to be tested and found to comply with various RF interference emissions limits before it may be marketed. The FCC established different limits, according to the particular use and installation of RF devices. In some cases, a grant of equipment authorization from the FCC also must be obtained before and RD device may be marketed.

   To ensure continued compliance with the FCC's requirements, the owner, user, custom manufacturer, or service technician must not modify or change the RF device in a manner not expressly approved by Ford Motor Company. Such modifications could void the authority to operate the device.

NOTES —

(1) For vehicles with a GVWR of 10,000 lb or less and an unloaded vehicle weight of 5500 lb or less.

(2) Injury criteria is applicable to vehicles with a GVWR of 8500 lb or less and an unloaded vehicle weight of 5500 lb or less.

(3) Applicable to vehicles with a GVWR of 10,000 lb or less.

(4) Dynamic Performance Requirements apply to MPV, Truck, or a Bus with a GVWR of 2722 Kg (6000lb) or less for FMVSS only.

(5) F/CMVSS 135 is applicable to vehicles with a GVWR of 3500 Kg (7716 lb) or less. F/CMVSS 105 is applicable to vehicles with GVWR over 3500 Kg (7716 lb).

DESIGN RECOMMENDATIONS
PICKUP BOX REMOVAL/ALTERATIONS

2. CANADIAN RADIO FREQUENCY INTERFERENCE (RFI) INFORMATION

   All vehicles powered by spark ignition engines (e.g., gasoline, natural gas, or propane engines) and manufactured in Canada or for sale or use in Canada, are subject to the Canadian "Regulations for the Control of Interference to Radio Reception" per Interference-Causing Equipment Standard (ICES-002) and applicable test method according to "CAN/CSE-C108, 4-M92". Violation of these regulations is punishable by fine or imprisonment. Ford-built vehicles were designed and manufactured to be capable of meeting the regulatory requirements or such modifications, thereof, as may have been authorized by the Department of Communications. However, because Ford has no control over how an altered vehicle is completed by subsequent stage manufacturers, Ford does not represent that the completed vehicle, incorporating the Ford-built components, will comply with applicable requirements.

The following information is supplied to subsequent stage manufacturers to help them avoid increasing the RFI emissions of this vehicle in the course of completing it.

For any altered vehicle, additional measures may be needed to adequately suppress RFI emissions. Affected components could include spark plugs, electronic engine control module, ground straps, ignition component shields, accessory drive belts, and instrument voltage regulator suppressor assembly.

More specifically:

- All components required to suppress RFI emissions, which are removed during service, repair, or completion of the vehicle, must be reinstalled in the manner in which they were installed by Ford.
- Shields on ignition coil must remain installed.
- Replacement of spark plugs, ignition wires, and ignition coil must be equivalent in their RFI suppression properties to original equipment.
- Electrical grounds on all components must be retained.
- Metallic components installed on the body or chassis must be grounded to the chassis.
- Electrical circuits added to the vehicle must not be installed near the high voltage ignition components.
- Only "static conductive" accessory drive belts should be used. Fan, water pump, power steering, and other belts should be on the OEM type or equivalent that will not build up a static electrical charge.
- Engine component wiring must not be rerouted in any manner.
- The Powertrain Control Module (PCM) must not be relocated from the position as installed by Ford Motor Company.

E. Noise

Canadian Motor Vehicle Safety Standard (CMVSS) NO. 1106 prescribes maximum permissible noise levels of 83 dB(A) for "heavy-duty vehicles," with a GVWR between 6001 and 10,000 lb, where such levels are measured in accordance with SAE Standard J986a, "Sound Level for Passenger Cars and Light Trucks" (July, 1972). Under the Canada Motor Vehicle Safety Standards, a "heavy-duty vehicle" is a bus, a Chassis Cab, a multipurpose passenger vehicle, or a truck having a gross vehicle weight rating of more than 6000 lb, but not a passenger car. However, Transport Canada's tabulation of CMVSS indicates that CMVSS No. 1106 does not apply to incomplete vehicles as such.

A pickup truck listed in tables on pages 214-215, if altered only by the removal of the pickup box (including optional equipment attached to the pickup box) and rear bumper (if so equipped), is designed and built to conform to the applicable exterior noise emission limits of CMVSS NO. 1106 (1)(b). The alterer is, of course, responsible for determining that the vehicle, as altered, complies with CMVSS No. 1106.

WARNING — VEHICLE OPERATING TEMPERATURES

Some trucks of Ford Motor Company may exhibit high engine compartment and exhaust system temperatures in some operating modes. Components, including exhaust heat shielding systems, have been installed on some vehicles in our assembly plants in an effort to provide protection against such temperatures. Subsequent aftermarket installers/manufacturers are responsible for providing thermal protection (e.g., underbody heat shields) for any structure/equipment added to the vehicle, and should not remove any components/exhaust heat shielding installed on the vehicles by Ford. Also, the added structure/equipment should not restrict air circulation in the engine compartment or underbody. See applicable sections under "Ambulance Builders Guidelines" on page 234.

Any interior floor underlayment or insulation in the near vicinity of the exhaust system, without benefit of the Ford-provided heat shields, must be capable of withstanding 371° C and 482° C [900° F] in close proximity to the catalyst during normal operating conditions. Additionally, any under chassis-mounted component, within 4 inches of the exhaust system, must be compatible with these temperatures.

IMPORTANT INFORMATION CONCERNING ALTERATION OF VEHICLES WITH A GVWR OF 8500 LB OR LESS FOR SALE, REGISTRATION, OR USE IN CALIFORNIA

Ranger SuperCab pickup trucks, listed in Table A on page 215 and manufactured by Ford Motor Company for sale, registration, or use in California, can be altered by removal of the pickup box (including items attached to the pickup box) and rear bumper (if so equipped) and installation of a second unit body, if all of the following conditions are satisfied.

For additional information concerning noise control laws and regulations issued by the Federal (U.S.) Government, as well as some states and municipalities, see Vehicle Noise Regulations on pages 43-44 of the Safety/Emission section.

1. Conditions numbered 1, 2, 3, and 4 under Section A entitled "Exhaust and Evaporative Emission Requirements" (pages 212-213), and those under Section C, entitled "California Fuel Vapor Recovery" (page 212), as they apply to vehicles with a GVWR of 8500 lb or less.
2. The vehicle alterer does not increase the vehicle's unloaded vehicle weight by more than 10% over the maximum curb weight (unloaded vehicle weight specified in tables on pages 214-215 corresponding to the particular pickup model), does not increase the frontal area by more than 10%, or does not provide a combination increase of weight plus frontal area of more than 14%.

NOTE: The maximum unloaded vehicle weight, specified in tables on pages 214-215 for California, is the curb weight – the basic curb weight plus the weight of options of greater than 33% installation rate.

NOTE: If the weight (in pounds) of the altered vehicle exceed the maximum unloaded vehicle weight specified in tables on pages 214-215, corresponding to the particular pickup truck model, the vehicle alterer is required to certify the vehicle to: F/CMVSS No. 105 or 135, Brakes; F/CMVSS No. 204, Steering Control Rearward Displacement (if the unloaded vehicle weight is 5500 lb or less); F/CMVSS No. 208 (if the unloaded vehicle weight is 55 lb or less); F/CMVSS No. 212, Windshield Mounting; F/CMVSS No. 219, Windshield Zone Intrusion; and F/ CMVSS No. 301, Fuel System Integrity, in addition to any other F/CMVSS to which conformity is affected by the vehicle's alteration.

3. No axle ratio, tire size or tire type changes are made that would increase the drivetrain ratio by more than five percent.

Altered vehicles which do not satisfy these conditions may not be sold, offered, or delivered for sale, or registered in California, unless the altered vehicle is certified by the California Air Resources Board, pursuant to all applicable emissions requirements. The vehicle alterer is responsible for obtaining such certification. Questions regarding these requirements should be directed to your legal counsel or the California Air Resources Board.

DESIGN RECOMMENDATIONS
SUPER DUTY F-SERIES
PICKUP BOX REMOVAL/ALTERATIONS

TABLE A – SUPER DUTY F-SERIES MODELS AVAILABLE FOR PICKUP BOX REMOVAL

					Second Unit Body Limits				
					Weight		Max. Height[a/]	Maximum Complete Vehicle UVW [lb][f/]	
	Model	Drive	WB [in]	GVWR [lb]	Min [lb]	Max[b/c/] [lb]	Cg[c/] [in]	5.4L/6.8L Gasoline[g/h/]	7.3L Diesel[h/]
Regular Cab	F-250	4x2	137.0	8800	380	1800	17.6	6400	7050
	F-250	4x4	137.0	8800	380	1800	17.6	6900	7350
	F-350	4x2	137.0	9900[d/]	380	1800	17.6	6400	7050
	F-350	4x4	137.0	9900[d/]	380	1800	17.6	6900	7400
	F-350 DRW	4x2	137.0	11,200[e/]	420	3450	24.0	9750/9550	11,500/9550
	F-350 DRW	4x4	137.0	11,200[e/]	420	3450	24.0	9750/9550	11,500/9550
Super Cab	F-250	4x2	141.8	8800	340	1800	24.0	6750	7250
	F-250	4x4	141.8	8800	340	1800	24.0	7150	7550
	F-250	4x2	158.0	8800	380	1800	24.0	6850	7250
	F-250	4x4	158.0	8800	380	1800	24.0	7250	7700
	F-350	4x2	141.8	9900[d/]	340	1800	24.0	6750	7250
	F-350	4x4	141.8	9900[d/]	340	1800	24.0	7200	7600
	F-350	4x2	158.0	9900[d/]	380	1800	24.0	6850	7450
	F-350	4x4	158.0	9900[d/]	380	1800	24.0	7250	7750
	F-350 DRW	4x2	158.0	11,200[e/]	420	3450	24.0	9300/9100	11,600/9100
	F-350 DRW	4x4	158.0	11,200[e/]	420	3450	24.0	9300/9100	11,600/9100
Super Cab	F-250	4x2	156.2	8800	340	1800	24.0	7000	7450
	F-250	4x4	156.2	8800	340	1800	24.0	7400	7750
	F-250	4x2	172.4	8800	380	1800	24.0	7050	7650
	F-250	4x4	172.4	8800	380	1800	24.0	7475	7900
	F-350	4x2	156.2	9900[d/]	340	1800	24.0	7000	7500
	F-350	4x4	156.2	9900[d/]	340	1800	24.0	7400	7800
	F-350	4x2	172.4	9900[d/]	380	1800	24.0	7100	7650
	F-350	4x4	172.4	9900[d/]	380	1800	24.0	7500	7950
	F-350 DRW	4x2	172.4	11,200[e/]	420	3450	24.0	9300/9100	10,600/9100
	F-350 DRW	4x4	172.4	11,200[e/]	420	3450	24.0	9300/9100	10,600/9100

a/ Vertical height measured from the top surface of the frame at the rear of the cab.

b/ Maximum Second Unit Body (SUB) weight for any model is the lesser of two values shown below:
- The value listed here or;
- The value determined by: SUB WEIGHT = MAX UVW – (OEM Wet Curb Weight) + Pickup Box + Options Removed.
  Rear step bumer ..... 74 lb
  Spare tire and wheel assembly ..... Table B

c/ Maximum SUB weights and center of gravity (CG) shown in this table are only allowable if F/CMVSS 105 criteria are satisfied per calculation Safety/Emission section of this book.

d/ 9700 lb – California only.

e/ 12,500 lb for diesel. California is 11,000 lb for all engines.

f/ Weight shown is maximum allowable for safety certification. For vehicles with a GVWR greater than 10,000 lb, the listed UVW's are recommended only. Refer also to pages 48-49 of the Safety/Emission section for emission certification weight limitations.

g/ Note that the 5.4L engine and the 6.8L engine, with manual transmission, is not suitable for pickup box removal in California.

h/ Federal/California

i/ 11,500 lb for diesel. California is 11,000 for all engines.

TABLE B – SUPER DUTY F-SERIES TIRE AND WHEEL WEIGHTS

Wheel Size	Wheel (only) Weight [lb]
16 x 7.0 K (Steel Wheel – SRW)	35.0
16 x 6.0 K (Steel Wheel – DRW)	37.0
19.5 x 6.0 RW (Steel Wheel – DRW)	52.0
19.5 x 6.75 K (Steel Wheel – DRW)*	42.5
16 x 7.0 K (Deluxe Aluminum – SRW)	17.0
16 x 7.0 K (Premium Aluminum – SRW)	22.5
16 x 6.0 K (Polished Aluminum – DRW)	20.0
Tire Size	**Tire Weight [lb]**
LT215/85R16	36.6
LT235/85R16	46.0
LT265/75R16	46.0
225/70Rx19.5	60.0
245/70Rx19.5	75.0

* Motor Home

DESIGN RECOMMENDATIONS
RANGER PICKUP BOX REMOVAL/ALTERATIONS

TABLE A – RANGER SUPERCAB MODELS AVAILABLE FOR PICKUP BOX REMOVAL

Description	Model	Drive	WB [in]	GVWR [lb]	Second Unit Body Limits				Maximum Complete Vehicle UVWR [lb]
					Weight		Max. Height[a/]		
					Min [lb]	Max[b/c/] [lb]	Cg[c/] [in]	Overall [in]	
SuperCab	XL[d/]	4x2	126	4600	230	1000	11.5	39.75	3950
	XL[d/]	4x2	126	4920	230	1040	11.5	39.75	4150
	XLT[e/]	4x2	126	4760	230	960	11.5	39.75	3910
	XLT[e/]	4x2	126	5020	230	960	11.5	39.75	4070
	Edge[e/]	4x2	126	4840	230	680	11.5	39.75	3990
	XLT[e/]	4x4	126	5080	230	834	11.5	39.75	4208
	XLT[e/]	4x4	126	5260	230	833	11.5	39.75	4208

a/ Vertical height measured from the top surface of the frame at the rear of the cab.

b/ Maximum Second Unit Body (SUB) weight for any model is the lesser of two values shown below:
- The value listed here or;
- The value determined by: SUB WEIGHT = MAX UVW – (OEM Wet Curb Weight) + Pickup Box + Options Removed.

c/ Maximum SUB weights and center of gravity (CG) shown in this table are only allowable if F/CMVSS 135 criteria are satisfied per calculation Safety/Emission section of this book.

Rear step bumper ..... 37 lb

Spare tire and wheel assembly..... Table B

d/ Models without rear jumpseats.

e/ Models with rear jumpseats.

TABLE B – RANGER TIRE AND WHEEL DATA

Wheel Size		Wheel (only) Weight [lb]
15 x 6.0 JJ	(base argent steel)	20.4
15 x 7.0 JJ	(silver styled steel)	22.6
15 x 7.0 JJ	(silver aluminum)	14.5
15 x 7.0 JJ	(chrome steel)	23.9
16 x 7.0 JJ	(5-spokle cast aluminum)	16.2
15 x 7.0 JJ	(8-hole forged aluminum)	16.9
16 x 7.0 JJ	(5-spoke cast aluminum)	20.5
Tire Size		**Tire Weight [lb]**
P235/75R-15SL		28.2
P225/70R-15SL		24.1
P245/75R-16SL		30.8
31X10.5R15		43.2

PICKUP BOX REMOVAL/ALTERATIONS
RANGER FILLER PIPE LOCATION AND DIMENSIONS

NOTES – PROVIDE ADEQUATE SUPPORT OF FUEL FILLER AND VENT HOSES TO ENSURE A CONTINUOUS DOWNWARD SLOPE FROM FUEL INLET TO TANK. (RECOMMENDED 2 DEGREES)

– RANGER FUEL FILLER KIT #IL5Z–9B149–AA

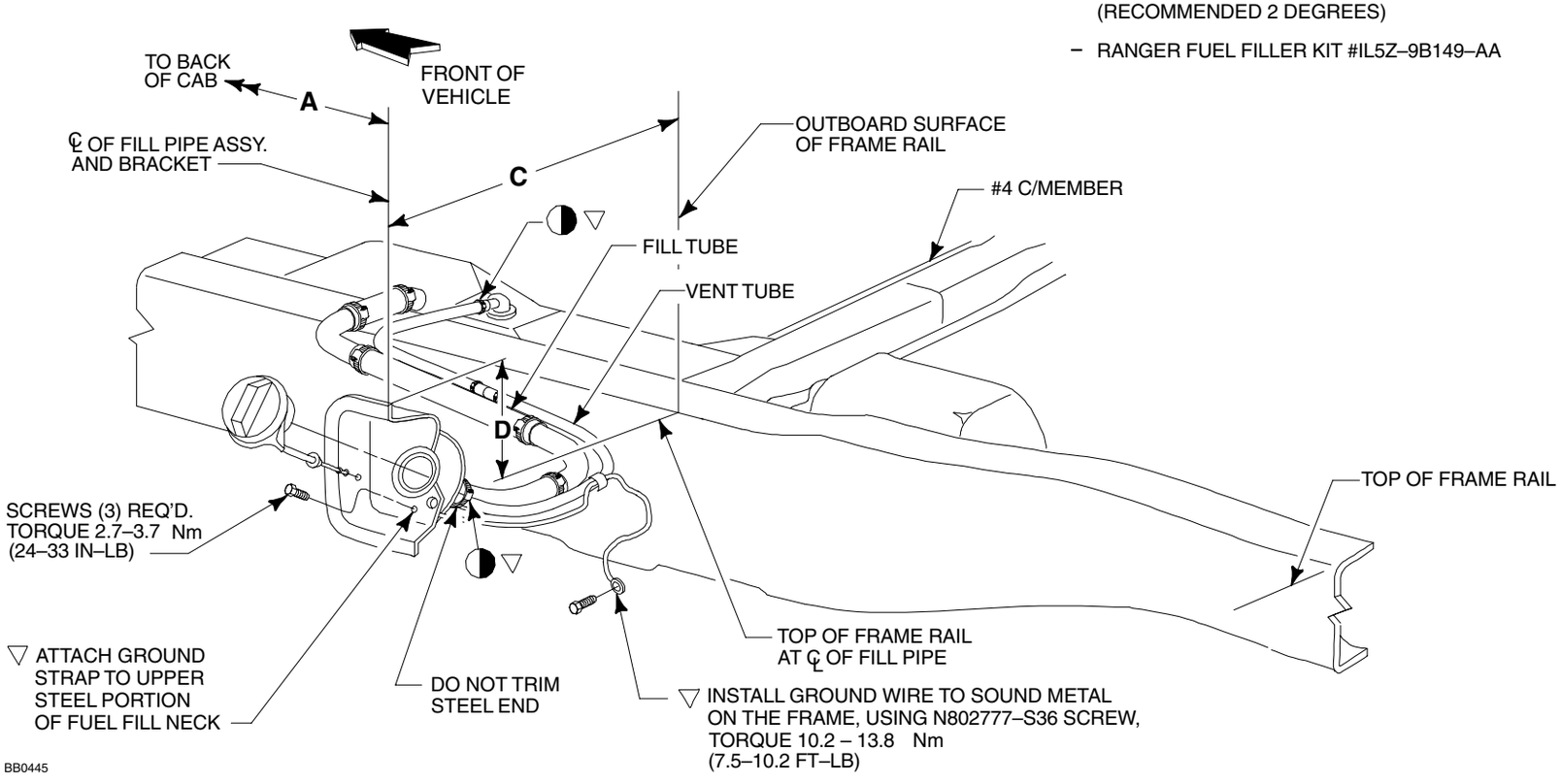

DIM.			
▽A	SUPERCAB	193 [7.6]	533 [21.0]
▽C	SUPERCAB	387 [15.2]	412 [16.2]
▽D	SUPERCAB	206 [8.1]	597 [23.5]

USE COMPONENTS FROM FUEL FILL SYSTEM INSTALLED BY FORD. REMOVE FROM VEHICLE HOSES AND CLAMPS AND CAP FOR USE WITH FILL PIPE KIT. USE NEW HOSES, PIPE, STEEL PORTION, TIE-WRAPS AND CLAMPS PROVIDED IN KIT TO CONNECT FUEL FILL SYSTEM FROM TANK TO UNIT BODY AS SHOWN. FUEL FILL AND VENT HOSES PROVIDED IN KIT MAY REQUIRE TRIMMING AS SHOWN IN FIGURE. THE RESULTING TRIMMED FILLER SYSTEM SHOULD PROVIDE A DIRECT DOWNWARD SLOPE TO THE FUEL TANK FROM THE METAL PIPE WHILE AVOIDING KINKS WHICH RESTRICT FUEL FLOW. ADDITIONAL SUPPORT MAY BE REQUIRED TO PREVENT SAGGING OR MIS-ORIENTATION. FAILURE TO DO SO WILL RESULT IN SPRAY OR SPIT-BACK DURING THE FUELING OPERATIONS.

▽ CRITICAL CONTROL ITEM

◑ TORQUE ALL WORM GEAR DRIVEN HOSE CLAMPS TO 2.7-3.7 Nm 24-38 IN-LB

NOTE - [ ] DIMENSIONS ARE INCHES.

PICKUP BOX REMOVAL/ALTERATIONS
RANGER

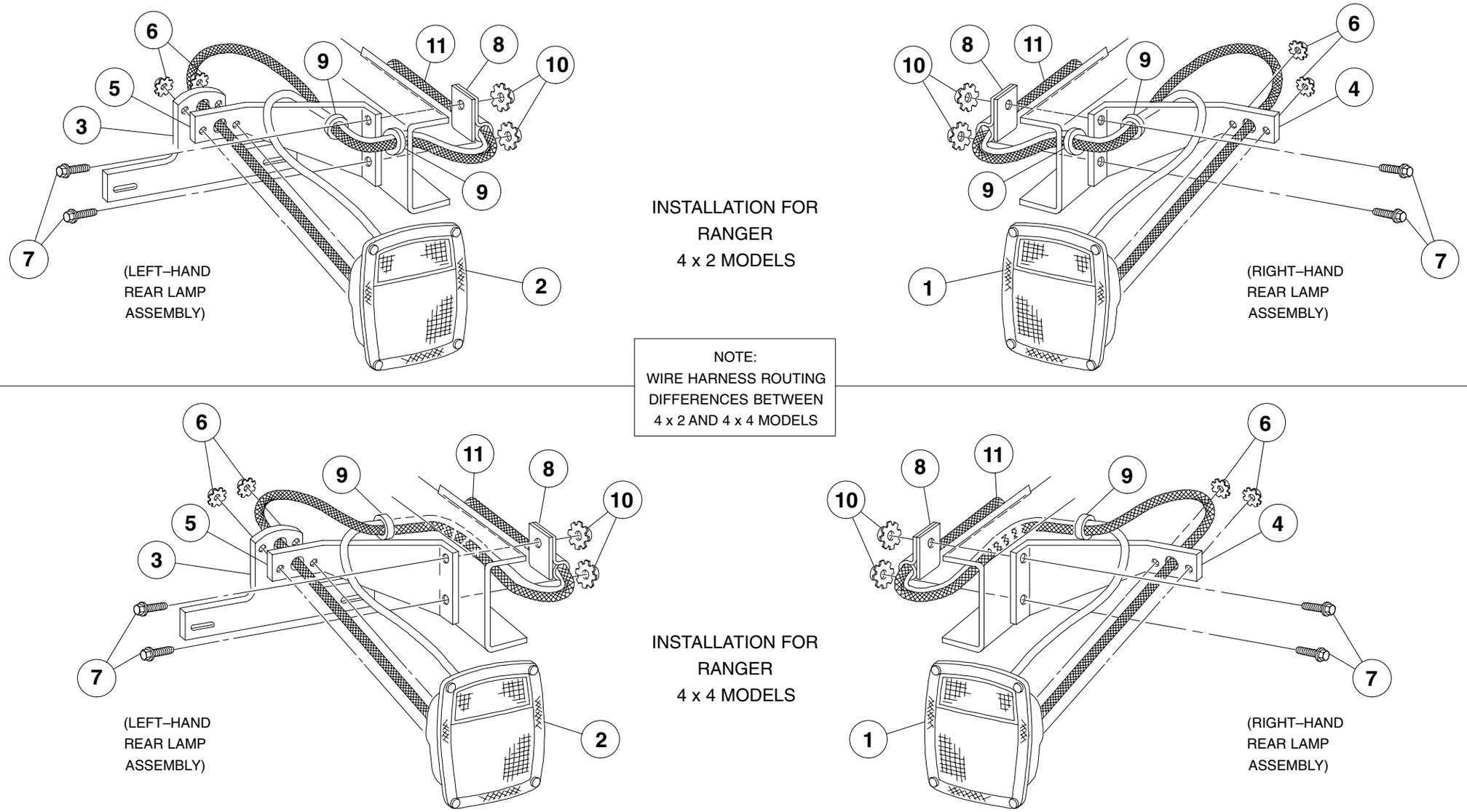

SERVICE PART NUMBERS	PART DESCRIPTION
1. E4TZ–13404–C	RIGHT–HAND REAR LAMP ASSEMBLY
2. E4TZ–13405–C	LEFT–HAND REAR LAMP ASSEMBLY
3. C7TZ–13406–A	LICENSE PLATE BRACKET
4. E0TZ–13470–C	RIGHT–HAND MOUNTING BRACKET
5. E0TZ–13471–A	LEFT–HAND MOUNTING BRACKET
6. 34659–S36M	NUT AND WASHER ASSEMBLY (4 REQUIRED) (TORQUE TO 3–7 POUND–FEET)
7. 55653–S36	BOLT (4 REQUIRED)

SERVICE PART NUMBERS	PART DESCRIPTION
8. 353473–S36	CLIP (2 REQUIRED)
9. 384646–S	GROMMET (4 REQUIRED FOR 4 x 2 MODELS; 2 REQUIRED 4 x 4 MODELS) (SPLIT LINE IN GROMMET MUST BE AT TOP, IN VERTICAL POSITION)
10. 34661–S36	NUT AND WASHER ASSEMBLY (4 REQUIRED) (TORQUE TO 12–20 POUND–FEET)
11. E3TZ–13A409–A	WIRING HARNESS (CONNECT TO MAIN WIRING ASSEMBLY) – RANGER ONLY

BB0220

REAR LAMP ASSEMBLY INSTALLATION AND PARTS LIST

DESIGN RECOMMENDATIONS SECOND UNIT BODY MOUNTING

INFORMATION

The following recommendations are intended to assist in the design of second unit bodies and body mounting systems that will control second unit body movement with respect to the Ford supplied chassis when tested to the procedures specified in F/CMVSS 204[(1)], 208[(2)], 212[(3)], 214[(3)(4)], 219[(3)], and 301[(3)]. These recommendations are based on testing and analyses performed by Ford Motor Company.

Second Unit Bodies (SUB) and their body mounting systems may take many forms, and the following recommendations cannot cover all the possibilities. Strict adherence to these recommendations will not ensure that the completed vehicle will comply with F/CMVSS 204[(1)], 208[(2)], 212[(3)], 214[(3)(4)], 219[(3)], or 301[(3)]. The final stage manufacturer who installs a second unit body on the chassis is responsible for compliance to the above mentioned regulations. Accordingly, Ford Motor Company cannot represent that these recommendations are appropriate for every specific application of a second unit body, the body mounting system, or act of a subsequent stage manufacturer.

To verify compliance of a particular second unit body and selected body mounting system with F/CMVSS 204[(1)], 208[(2)], 212[(3)], 214[(3)(4)], 219[(3)], and 301[(3)], the testing of a representative vehicle to the applicable procedures of the above regulations is recommended. Questions regarding compliance with F/CMVSS regulations should be directed to your legal counsel, the National Highway Traffic Safety Administration, or Transport Canada.

SECOND UNIT BODY STRUCTURES

The structural design and materials used in the construction of second unit bodies must be sufficient to help control collapse of the body and prevent disengagement from the chassis when tested in accordance with the specifications of F/CMVSS 204[(1)], 208[(2)], 212[(3)], 214[(3)(4)], 219[(3)], and 301[(3)]. Steel or aluminum structures are recommended, however, wood or composite materials may require additional reinforcements to provide the structural integrity required for actual crash testing. SUB structures should not exceed beyond (overhang) the end of the chassis (frame side members).

SECOND UNIT BODY FUEL SYSTEM COMPONENTS

SUB floor and bulkhead structures must accommodate the Ford fuel fill system and suggested design clearances. Fill neck locations and all F/CMVSS 301[(3)] compliance representations for Super Duty F-Series and E-Series vehicles are in the Statements of Conformity section of the *Incomplete Vehicle Manual*. See additional Fuel System Design Recommendations.

SECOND UNIT BODY ELECTRICAL

Some electrical power sources are identified in the Design Recommendations and the F/CMVSS 108 compliance representations in the *Incomplete Vehicle Manual*. For wiring diagrams and additional information see Electrical Wiring pages of the Design Recommendations section.

UNDERBODY HEAT MANAGEMENT

1. Underbody longitudinal or lateral air movement should not be restricted. Frame spacers designed by the intermediate and final stage manufacturer should provide for adequate airflow over the frame.
2. No portion of the floor pan should drop below the body sills, nor should the underbody structure drop below the top surfaces of the number 3 and 4 crossmembers. These conditions can result in reduced airflow, pinched fuel lines or vapor hoses which can raise the temperature of underbody components and increase fuel system pressure.
3. Any interior floor underlayment or insulation in the near vicinity of the exhaust system, without benefit of the Ford provided heat shields, must be capable of withstanding 371° C [700° F] (and 482° C [700° F] in close proximity to the catalyst) during normal operating conditions. Additionally, any under chassis mounted components within 101.6 mm [4 in] of the exhaust system must be compatible with these temperatures.

   The subsequent stage manufacturer should also consider the following situations, which may have an adverse effect on heat management.

   - Poor vehicle service or lack of maintenance
   - Deviation from a 50/50 ethylene glycol based antifreeze (coolant) to water ratio
   - Exceeding Ford GVW and GCW ratings
   - Malfunctioning systems such as exhaust or engine
   - Altering, changing, removing Ford engine fan and shroud
   - Blocked radiator grille area (spare tire, bicycles, etc.)
   - Use of throttle kickers.
4. Second unit body exterior panels, tool boxes, running boards, structures, or skirting that extend below the bottom of the frame, may affect underbody temperatures. The final stage manufacturer should verify that underbody temperatures of the completed vehicle are compatible with all vehicle's components when under conditions that consider the projected vehicle duty cycle and vehicle loading.
5. Full-width mudflaps should not be installed, as they restrict airflow under the vehicle and can also increase underbody temperatures.
6. Added structure or equipment should not restrict air circulation in the engine compartment/ underbody.
7. Added body vents, especially powered vents, should be located away from the fuel filler and venting areas and exhaust to avoid fuel fumes and vapors entering the interior of the vehicle.
8. Use of wood in construction should be eliminated where at all possible. If used, wood should be adequately protected from moisture and heat. Shields should be added if wood is installed near exhaust components.

NOTES —

(1) For vehicles with a GVWR of 10,000 lb or less and an unloaded vehicle weight of 5500 lb or less.

(2) Injury criteria is applicable to vehicles with a GVWR of 8500 lb or less and an unloaded vehicle weight of 5500 lb or less.

(3) Applicable to vehicles with a GVWR of 10,000 lb or less.

(4) Dynamic Performance Requirements apply to MPV, Truck, or a Bus with a GVWR of 2722 Kg (6000lb) or less.

DESIGN RECOMMENDATIONS SECOND UNIT BODY MOUNTING RANGER

RANGER SUB MOUNTING SYSTEM (BRACKET ATTACHMENT METHOD)

Shear plates are a method of SUB attachment that should minimize SUB movement under impact conditions. The following items are critical to the performance of this type of mounting system:

1. The SUB must be minimum 36.0 mm [1.40 in] from the back of the cab.
2. The frame to SUB spacers have a web dimension of 101.6 mm [4 in] minimum and the upper and lower flanges to be 57.0 mm [2.25 in], using 6.35 mm [0.25 in] HRLC steel. The spacer minimum length is 76.2 mm [3 in] for the front spacer and 152.4 mm [6 in] for the rear. These spacers will accommodate the recommended fuel filler pipe clearance provided they are installed 25.4 mm [1 in] or more from any fuel filler pipe. See Figure 1 on the next two pages for additional information.
3. Shear plate recommendations for a second unit body are:
   - 3/8 inch thick HRLC steel material, with a minimum of four fasteners for each shear plate, or two fasteners installed in the frame if the shear plate is welded to the SUB structure. Detailed shear plate design recommendations are shown in the sketches in Figure 1 on this page.

- Hole size, location, and spacing are shown in the above mentioned sketches.
- Three shear plates per side – one forward and two rearward of the rear axle.
- Use 5/8 inch diameter, grade 8 bolts, nuts and washers, four per side to attach shear plates to the frame, see Figure 1. **DO NOT WELD THE SHEAR PLATES TO THE FRAME.**
- Use 5/8 inch diameter, grade 8 bolts, nuts, and washers, four per side to attach shear plates to the SUB, or equivalent weld.
- 105-220 ft-lb torque for 5/8 inch nuts
- Direct the threaded end of bolt away from any fuel, brake, or electrical system component.

RANGER SUB MOUNTING SYSTEM (BRACKET ATTACHMENT METHOD)

This typical system design utilizes the existing eight (four per frame rail) pickup box mounting holes. The typical service body under-structure referenced uses 3 inch front and rear body cross sills. The height of the mounting system is governed by the clearance requirements of the midship fuel tank fuel filler to the front intermediate body cross sill. The mounting system depicted herein represents the minimum floor height achievable for a service body of conventional design.

Various service body designs (larger body cross sills or lower wheel house height) will dictate a higher mounting system in order to provide standard body to chassis (fuel filler and tire) clearances.

This suggested typical system is made up of eight (8) components and associated attaching hardware. A chart on this page and drawings of each component and their installation on the next 2 pages are typical of a service body installation.

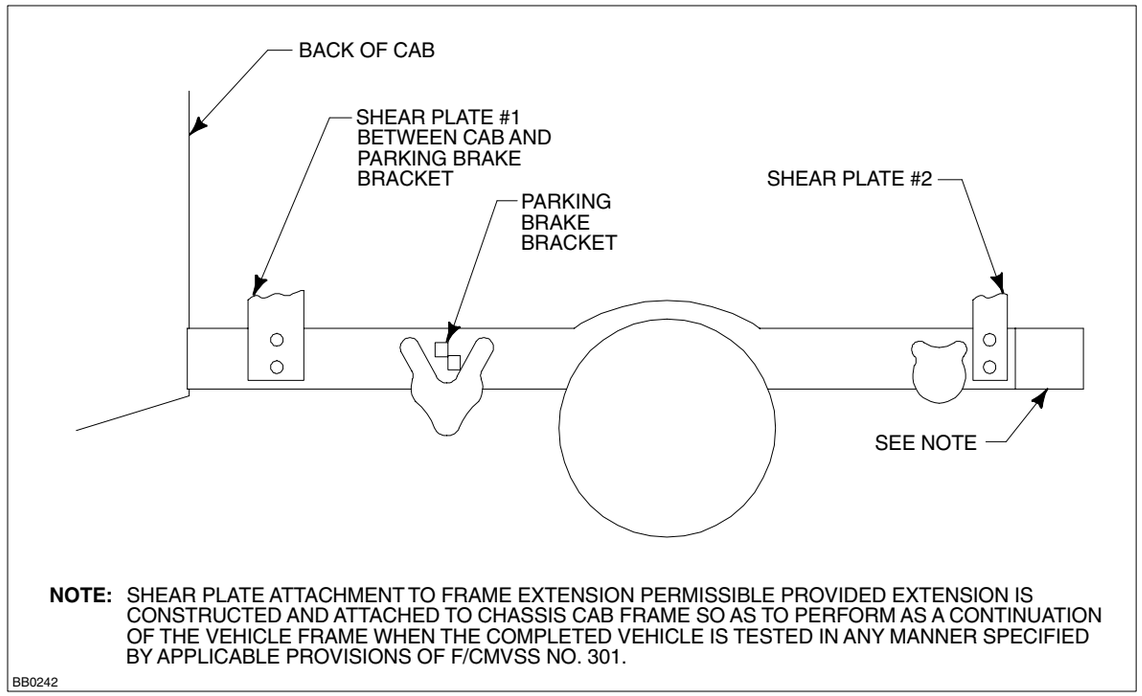

FIGURE 1 - TYPICAL RANGER SHEAR PLATE ATTACHMENT

COMPONENT DESIGNATION	COMPONENT DESCRIPTION	NOTES
Front Service Body Mount (Item A)	A 3" C section with outboard brace (restrainer). LH mount is a mirror image of the RH mount	Weld and bolt to underbody as specified, See Figure 1, Item A on page 220.
Mid-Front Cross Sill Service Body Mount (Item B)	A 4.66" C section 30.5" long	Locate on lower surface body floor by means of hole alignment to P/U box mounting holes in frame siderail upper flange. Weld to floor as specified, see Item B, on page 221.
Mid-Rear Service Body Mount (Item C)	A 3.06" C section 31.90" long	Locate with respect to P/U box mounting holes in frame siderail upper flange. Weld and bolt to rear cross sill of service body as specified, see Item C, on page 221.
Rear Service Body Mount (Item D)	A 1.81" C section. The LH mount is a mirror image of the RH mount.	Locate forward (4.125" C/L) hole with respect to P/U box mounting hole in frame siderail upper flange. Weld and bolt to rear cross sill of service body as specified, see Item D, on page 221.
Attaching Parts, *et.al.*	Use 0.62" diameter grade 8 bolts, nuts, and washers. Minimum length of 1.25" for bolts. Torque to 105-220 ft-lb.	Largest possible flat washers must be utilized on lower side of frame rail flange. Caution: Ensure that the flat washer does not interfere with frame bend radii.

DESIGN RECOMMENDATIONS
SECOND UNIT BODY MOUNTING
RANGER

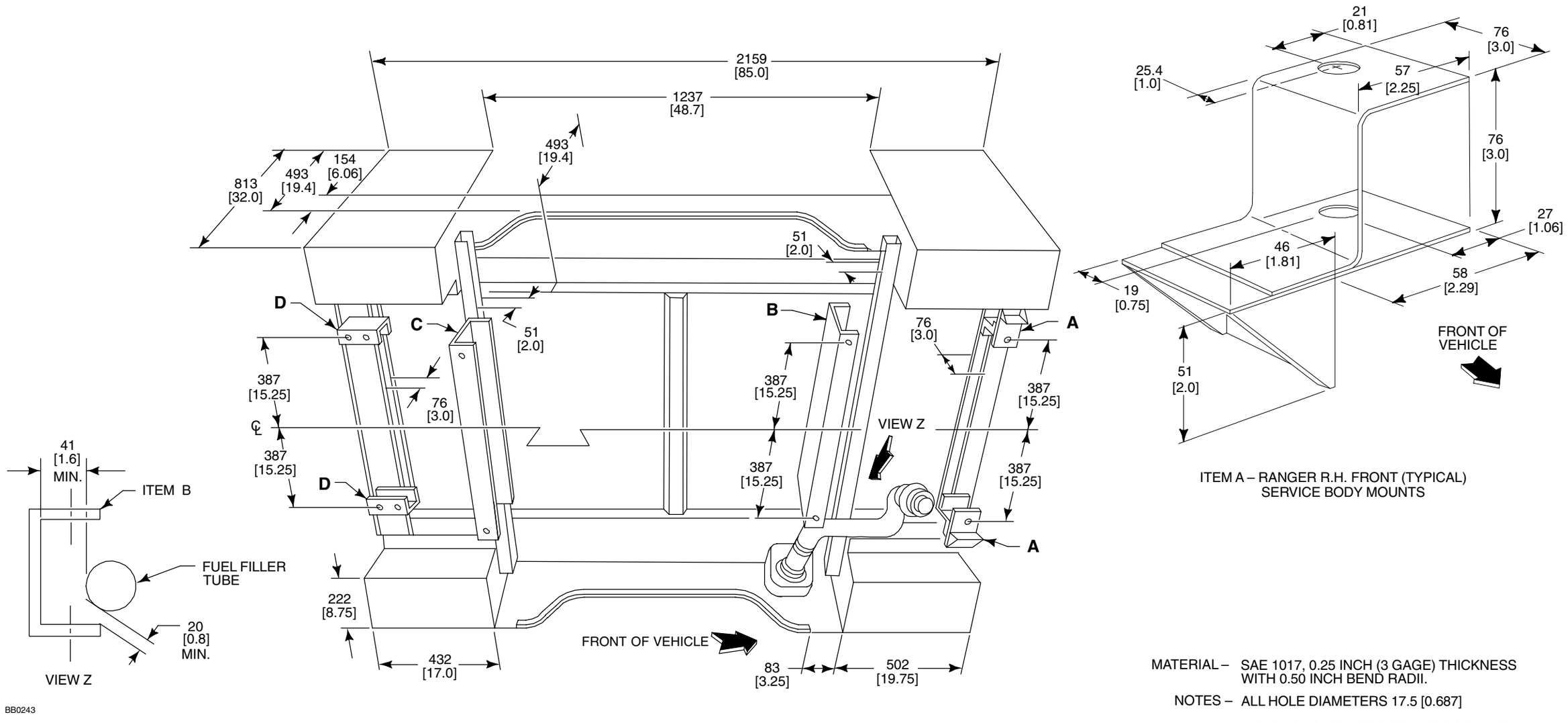

MATERIAL – SAE 1017, 0.25 INCH (3 GAGE) THICKNESS WITH 0.50 INCH BEND RADII.

NOTES – ALL HOLE DIAMETERS 17.5 [0.687]

WELD LEADING EDGE OF UPPER FLANGE (2 INCH LONG 0.125 ✳ INCH FILLET) TO BODY FRONT CROSS SILL AND GRADE 8 BOLTS, NUTS AND WASHERS. (L.H. SYMMETRICALLY OPPOSITE)

✳ REFERENCE ONLY, LEG OF FILLET SHOULD NOT EXCEED 0.7 OF THE THICKNESS OF THINNEST MATERIAL TO BE WELDED.

FIGURE 1 - RANGER BRACKET ATTACHMENT METHOD
(Typical Service Body)

NOTE — [ ] DIMENSIONS ARE INCHES.

DESIGN RECOMMENDATIONS
SECOND UNIT BODY MOUNTING RANGER

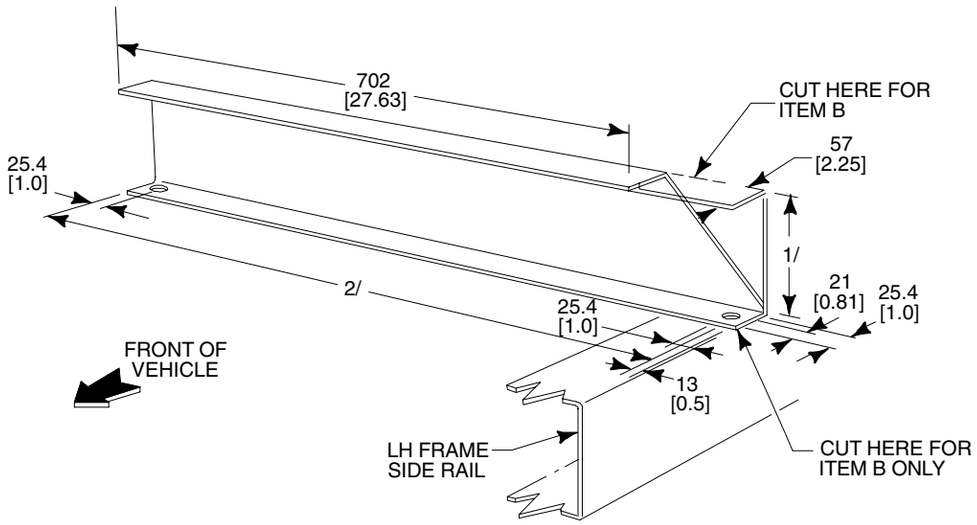

ITEMS B & C – RANGER MID–FRONT/REAR CROSS SILL (TYPICAL) SERVICE BODY MOUNT

MATERIAL – SAE 1017, 0.25 INCH (3 GAGE) THICKNESS WITH 0.50 INCH BENT RADII.

NOTES – ALL HOLE DIAMETERS 17.5 [0.687]

1/HEIGHT
ITEM B 118 [4.66]
ITEM C 78 [3.06]

2/LENGTH
ITEM B 822 [32.375]
ITEM C 810 [31.90]

WELD LEADING EDGE AND RADIUS OF UPPER FLANGE (SIX 2 INCH LONG WITH 3 INCH SPACING 0.125 ✳ INCH FILLET) TO UNDERSIDE OF BODY FLOOR

✳ REFERENCE ONLY LEG OF FILLET SHOULD NOT EXCEED 0.7 OF THE THICKNESS OF THINNEST MATERIAL TO BE WELDED.

BB0244

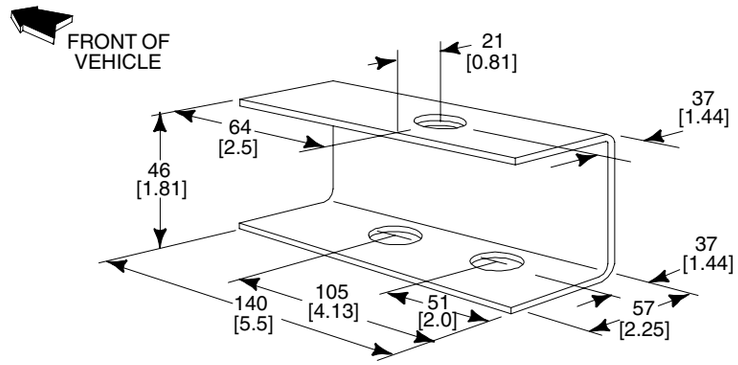

ITEM D – RANGER R.H. REAR (TYPICAL) SERVICE BODY MOUNT

MATERIAL – SAE 1017, 0.25 INCH (3 GAGE) THICKNESS WITH 0.50 INCH BEND RADII.

NOTES – ALL HOLE DIAMETERS 17.5 [0.687]

WELD REAR EDGE OF UPPER FLANGE (2 INCH LONG 0.125 ✳ INCH FILLET) TO BODY #4 CROSS SILL AND USE 5/8 INCH DIA. GRADE 8 BOLTS, NUTS, AND WASHERS. (LH SYMMETRICALLY OPPOSITE)

✳ REFERENCE ONLY, LEG OF FILLET SHOULD NOT EXCEED 0.7 OF THE THICKNESS OF THE THINNEST MATERIAL TO BE WELDED.

NOTE — [ ] DIMENSIONS ARE INCHES.

DESIGN RECOMMENDATIONS
SECOND UNIT BODY MOUNTING E-SERIES CUTAWAY

E-SERIES SUPER DUTY CUTAWAY SUB MOUNTING SYSTEM

Ford provides optional SUB mounting spacers which will isolate the SUB from the frame. The SUB should be attached to these spacers using all the provided holes in the spacer with a suggested minimum 7/16-14 UNC grade 8 fastener. These fasteners should be directed away from any fuel system component or should not extend more than 25.4 mm [1.00 in] below the spacer flange. The location of these spacers is shown on page 96-101. The rubber isolators on the spacers are capable of 19.0 mm [0.75 in] movement in spherical zone from a static (design) position, which is the same for the isolators that mount the Cutaway body to frame. This will minimize squeaks, rattles and water or air leaks at the mounting surface of the SUB, to Cutaway body. The Ford optional spacers will accommodate the recommended fuel fill neck installation as shown on page 119, and a recommended 101.6 mm [4.00 in] minimum clearance between the frame and the bottom of the SUB (except at the rear axle kick-up area).

Vehicles not equipped with the Ford optional spacers have 34.8 mm[1.37 in] diameter holes on the upper flange of the frame sidemembers for body to frame isolators. The density/durometer, size and quantity of these isolators should be based on the SUB weight plus the projected payload of the completed vehicle, within the limits of the GAWRs and GVWR, as determined by the final stage manufacturer.

E-450 Super Duty Cutaway and Stripped Chassis vehicles have a transmission mounted parking brake. SUB structures should clear this component by 25.4 mm [1.00 in] minimum.

[176.00 in] WB vehicles equipped with a 55-gallon fuel tank will require a 457 mm [18.00 in] minimum frame extension to provide for an adequate departure angle.

The attachment of the SUB to the Cutaway body should consider the following:

1. Blind installation of self- expanding nut type fasteners can be located in the zone as defined in the figure on this page, and should allow for functional expansion, and be equally spaced. The body edge flange may also be used for fasteners provided the center of the required hole is 1.5 times the hole diameter from the edge of the panel. These recommendations apply to both B-pillar attachment.
2. Removal of the access panel and fasteners at the lower area of the B-pillar will allow for flush mounting of the SUB. This opening should be completely covered and sealed from obvious climatic conditions.
3. Roof attachments should be equally spaced and are permitted on the flange provided. The center of the required holes should be 1.5 times the hole diameter from the edge of the flange.
4. Floor attachments should be equally spaced and are permitted on the flange provided. The center of the required holes should be 1.5 times the hole diameter from the edge of the panel.
5. Washers or doublers should be considered to increase the bearing surface under fasteners to increase joint integrity and to decrease sheet metal fatigue, squeaks, and rattles.
6. Gaskets or sealers installed between the Cutaway body and the SUB should consider the displacement and stabilization of such materials when clamped, and the effect on joint integrity.

Second Unit Body mounting components NOT PROVIDED by Ford must be installed on the frame in areas as shown on page 51.

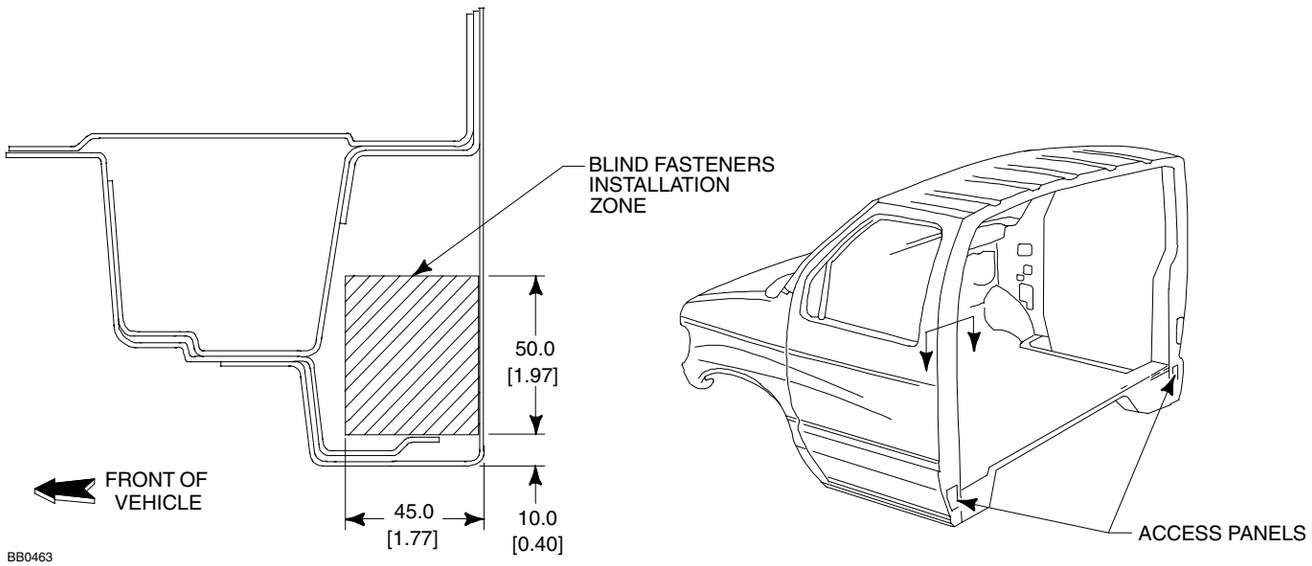

E-SERIES SUPER DUTY CUTAWAY BODY TO SECOND UNIT BODY ATTACHMENT

NOTE — [ ] DIMENSIONS ARE INCHES.

DESIGN RECOMMENDATIONS
SECOND UNIT BODY MOUNTING

E-250/350/450 SUPER DUTY STRIPPED CHASSIS SECOND UNIT BODY

A full length structural body should be attached to the chassis utilizing a system of body bolsters bolted and welded to the chassis frame sidemember as shown on this page.

Rear body bolsters extend along the parallel sections of the frame sidemember using the existing 34.8 mm [1.4 in] diameter holes as shown in View B, on this page.

Bolster attachment in the rear axle kick-up area can be accomplished by bolting shear plates to the web of the frame sidemember as shown in View C, on this page. The maximum size hole that may be drilled in the frame web is 19 mm [0.75 in] diameter. Refer to the drilling precautions in the Frame section of these Design Recommendations on page 233.

Front body bolsters should be attached to the frame sidemember as far forward as possible. They should be welded to the web of the frame sidemember immediately to the rear of the front radiator and cowl support structure as shown in View A. Front bolsters should not be bolted to the frame sidemember in this area since there is no access to the inside surface sidemember.

Each front bolster should be rigidly connected to the corresponding rear bolster through the body floor or a tie bar.

Do not weld to the flanges of the side rail. Refer to the welding precautions in the Frame section of these Design Recommendations on page 233.

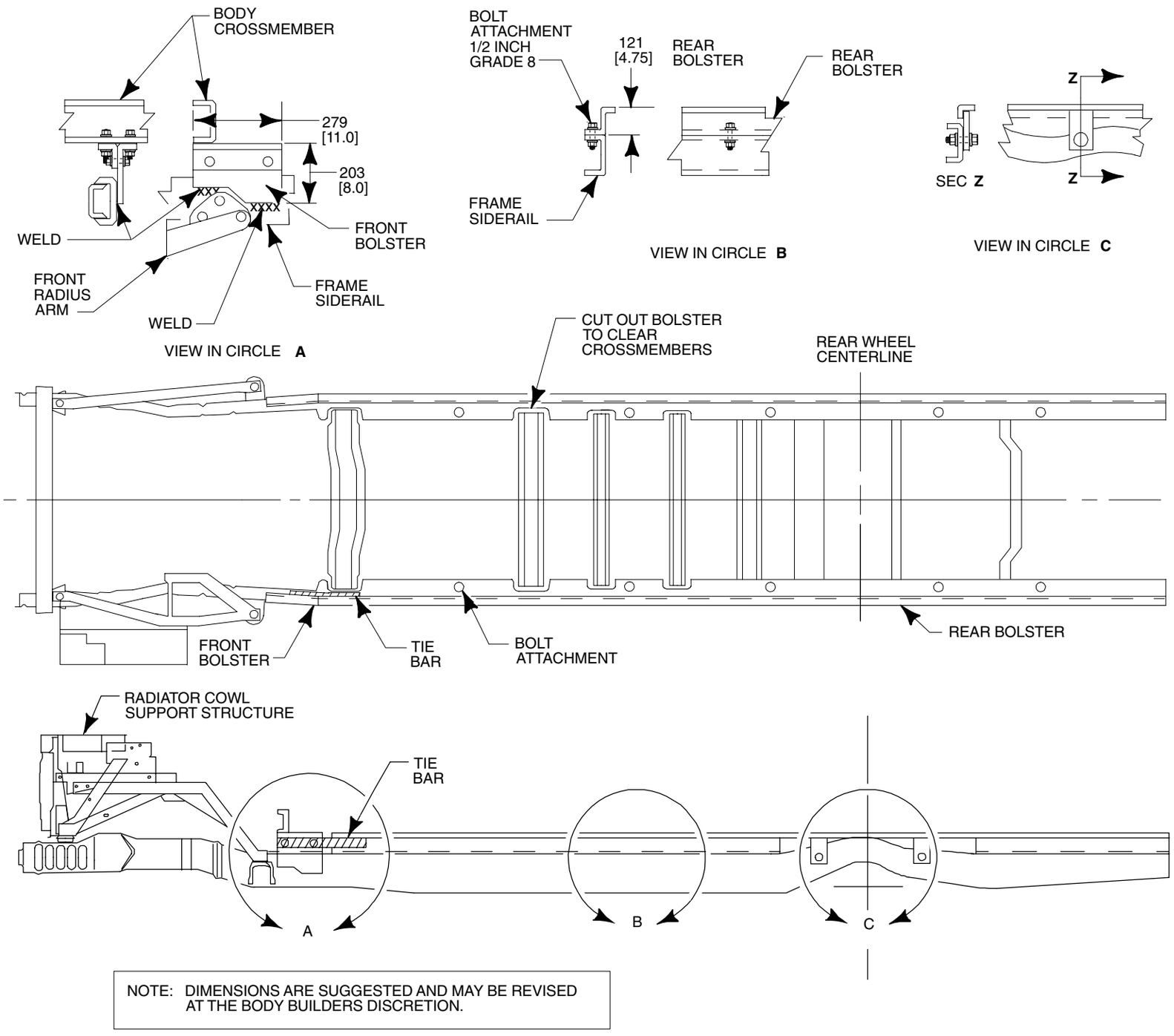

E-250/350/450 SUPER DUTY STRIPPED CHASSIS SECOND UNIT BODY INSTALLATION

NOTE — [ ] DIMENSIONS ARE INCHES.

DESIGN RECOMMENDATIONS SECOND UNIT BODY MOUNTING

SUPER DUTY F-SERIES SECOND UNIT BODY (SUB) MOUNTING TECHNIQUES FOR CHASSIS CAB (WIDE FRAME)

The intent of the illustrations shown on the following two pages is to offer an expanded range of Second Unit Body (SUB) mounting design recommendations for Super Duty F-Series trucks with a 1422 mm [56 in] Cab to Axle (CA) design.

SUB Mounting Techniques #1 and #2 for 56" CA with SUB weight 1800 lb or less

These SUB mountings were tested by Ford Motor Company and found to be capable of complying with F/CMVSS requirements. The sketches in Figures A and B on the following page depict the recommended SUB mounting techniques.

SUB Mounting Technique #3 for 56" CA with SUB weight 1800 lb or less

The third mount scheme is a top bolted mounting technique. This top bolted SUB mounting is recommended for the Super Duty F-Series pickup trucks with a 1422 mm [56 in] CA. This technique uses the existing pickup box mounting holes to mount a SUB weighing 1800 lb or less provided the SUB is mounted in a similar fashion to the Ford's pickup box. These mountings should use the same number of OEM fasteners and OEM locations. The sketch which is shown in Figure C on page 226 depicts this technique. Refer to page 173 of Super Duty F-Series section for mounting hole layout.

SUB Mounting Technique #4 for 56" CA with SUB weight 1800 lb or less

This technique embodies the Front and Rear Shear plate attachment as depicted in SUB Mounting Techniques #1 and #2, but requires addition of U-bolts for further attachment. Figures D and F on page 226 depicts this technique.

CHASSIS CAB (NAROW FRAME)

Figures E and F on page 226 show the SUB mounting design recommendations for Super Duty F-Series Trucks with a 60", 84", 108", or 120" Cab to Axle (CA). Prepunched holes are provided to accommodate front shear plates as shown on pages 177-178 of the Super Duty F-Series section.

DETAILS OF THE SECOND UNIT BODY MOUNTING TECHNIQUES

The following SUB mounting design recommendations are methods of attachment intended to minimize SUB movement under crash situations. The following items are important factors in the performance of the system:

1. The forwardmost surface of the SUB is located at least 76.2 mm [3.0 in] behind the rearmost surface of the cab. Refer to the Statements of Conformity for F/CMVSS 212[(1)], 219[(1)], and F/CMVSS 301[(1)], in the *Incomplete Vehicle Manual*.
2. Spacers between the frame and SUB must provide adequate clearance to the fuel fill system on wide frame or pickup box delete models. Refer to the Statement of Conformity for F/CMVSS 301[(1)] of the *Incomplete Vehicle Manual* and the Design Recommendations for fuel fill systems on page 228-229 of this book.
3. The following are SUB mounting instructions for a SUB weight of 3960 kg [1800 lb] or less and a 56" CA:

   The frame to SUB spacers must provide adequate space to allow a proper fuel filler pipe installation on pickup box delete models.

   Technique #1; **front shear plate** attachment; use two, 5/8" diameter, grade 8 bolts, nuts, and washers in the OEM frame. One, 5/8" diameter, grade 8 bolt, nut, and washers with a 1/4" equivalent weld bead around three sides of the shear plate and the SUB mounting frame, skip welded at the shear plate corners. See Figure A, View A on page 225. **DO NOT WELD THE SHEAR PLATES TO THE OEM FRAME.**

   Technique #1; **rear shear plate** attachment; use three, 5/8" diameter, grade 8 bolts, nuts, and washers in the OEM frame. One, 5/8" diameter, grade 8 bolt, nut, and washers with a 1/4" equivalent weld bead around three sides of the shear plate and the SUB mounting frame, skip welded at the shear plate corners. See Figure A, View B on page 225.

   Technique #2; **front shear plate** attachment; use two, 5/8" diameter, grade 8 bolts, nuts, and washers in the OEM frame. Two, 5/8" diameter, grade 8 bolt, nut, and washers in the SUB mounting frame. See Figure B, View C on page 225.

   Technique #2; **rear shear plate** attachment; use three, 5/8" diameter, grade 8 bolts, nuts, and washers in the OEM frame. Two, 5/8" diameter, grade 8 bolt, nut, and washers in the SUB mounting frame. See Figure B, View D on page 225.

   Technique #3; **pickup box** attachment; use eight, 5/8" diameter, grade 8 flange nuts and bolts that utilize the existing pickup box holes in the top frame flanges. See Figure C on page 226.

   Technique #4 (56" CA with SUB weight over 1800 lb) use same as Technique #1 except with addition of U-bolts as shown in Figure D on page 226.

   For Super Duty F-Series Chassis Cab vehicles with a 60", 84", 108", or 120" CA, it is recommended that the front shear plate mounting holes, as provided on each chassis, be used. Use the same front and rear shear plate attachment ad Technique #1 or #2 with a 5/8" diameter U-bolt spaced every 24 to 36 inches. See Figure E on page 226. When U-bolts are used, vertical spacers must be between the upper and lower frame flanges at each U-bolt to prevent collapse of the flanges. See Figure F on page 226. U-bolt torque must be checked every six months.

The following items are important factors in the performance of the system:

- The spacer should be secured in such a manner as to maintain retention during installation or during operational use and should have a slight taper which starts at the front of the SUB frame. See figures on page 225.
- Front shear plates should be angled forward approximately 45 to 60 degrees from the horizontal. Front shear plates should be a sufficient distance from the front of the SUB to allow for frame flexing, i.e., front shear plates should be placed behind the tapered section of the spacer.
- Use 5/8" diameter, grade 8 bolts, nuts, and washers that attach the shear plates to the OEM vehicle and SUB frame.
- 60-65 ft-lb torque for the 5/8" diameter, grade 8 bolts, nuts, and washers.
- Direct the threaded end of the bolts away from any fuel, brake or electrical system components.

DESIGN RECOMMENDATIONS
SECOND UNIT BODY MOUNTING

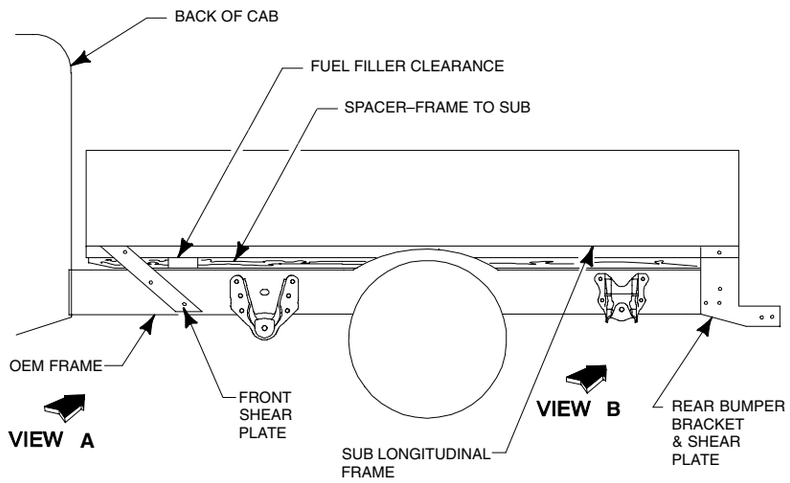

ATTACHMENT ARRANGEMENT WITH LONGITUDINAL SUB FRAME

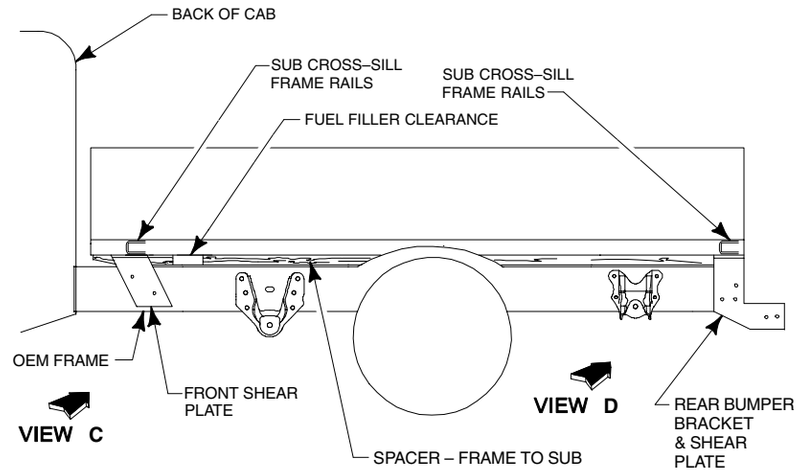

ATTACHMENT ARRANGEMENT WITH CROSS–SILL SUB FRAME RAILS

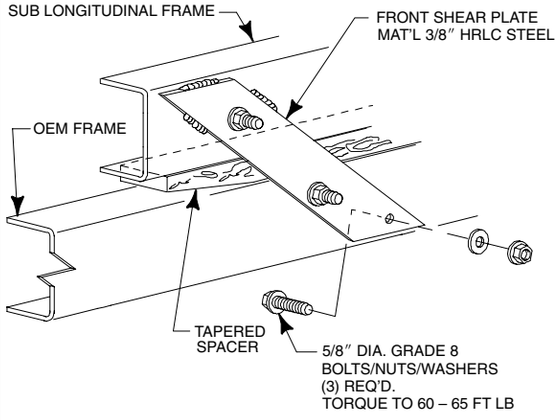

DRAWING DEPICTS SUB LONGITUDINAL FRAME WITH ONE 5/8″ DIA. BOLT AND 1/4″ WELD BEAD AROUND THE PERIMETER OF THE SHEAR PLATE.

IF THE SHEAR PLATE IS NOT WELDED ON THE SUB LONGITUDINAL FRAME, TWO 5/8″ DIA. BOLTS WOULD BE NECESSARY TO ATTACH THE SHEAR PLATE TO THE LONGITUDINAL FRAME.

VIEW A

LEFT FRONT SHEAR PLATE
(SUB LONGITUDINAL FRAME)
RIGHT SHEAR PLATE IS A MIRROR IMAGE.

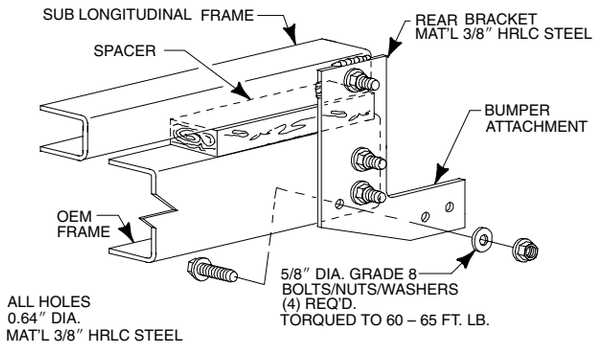

DRAWING DEPICTS SUB LONGITUDINAL FRAME WITH ONE 5/8″ DIA. BOLT AND 1/4″ WELD BEAD AROUND THE PERIMETER OF THE SHEAR PLATE

IF REAR BRACKET AND SUB FRAME ARE NOT WELDED TWO 5/8″ DIA. GRADE 8 BOLTS WILL BE NECESSARY TO ATTACH REAR BRACKET TO SUB FRAME. THREE 5/8″ DIA. BOLTS/NUTS/WASHERS ARE NEEDED TO ATTACH THE REAR BRACKET TO OEM FRAME.

VIEW B

LEFT REAR BRACKET (SUB LONGITUDINAL FRAME)
RIGHT REAR BRACKET IS A MIRROR IMAGE.

RECOMMENDED SHEAR PLATE ATTACHMENT FOR SECOND UNIT BODIES WEIGHING 1800 LB OR LESS WITH A 56"CA

FIGURE A - SUPER DUTY F-SERIES SUB MOUNTING TECHNIQUE #1

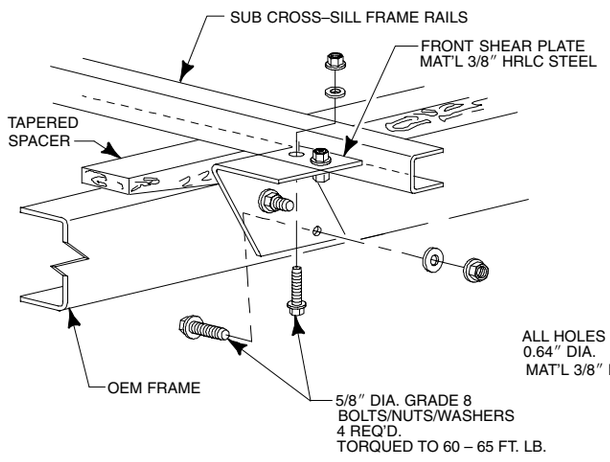

DRAWING DEPICTS SUB CROSS–SILL FRAME WITH TWO 5/8″ DIA. BOLTS

VIEW C

LEFT FRONT SHEAR PLATE
(SUB CROSS–SILL FRAME)
RIGHT SHEAR PLATE IS A MIRROR IMAGE

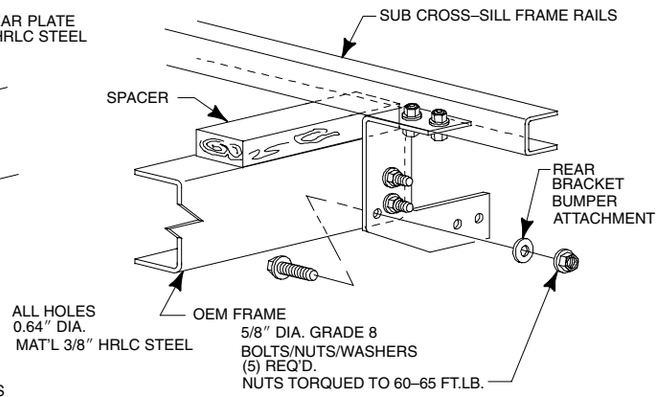

DRAWING DEPICTS SUB CROSS–SILL FRAME WITH TWO 5/8″ DIA. BOLTS ATTACHING THE REAR BRACKET TO SUBFRAME, THREE 5/8″ DIA. GRADE 8 BOLTS/ NUTS/WASHERS/ARE NEEDED TO ATTACH THE REAR BRACKET TO THE OEWM FRAME.BOLTS ATTACHING THE REAR BRACKET

VIEW D

LEFT REAR BRACKET (SUB CROSS–SILL FRAME)
RIGHT REAR BRACKET IS A MIRROR IMAGE.

BB0327

RECOMMENDED SHEAR PLATE ATTACHMENT FOR SECOND UNIT BODIES WEIGHING 1800 LB OR LESS WITH A 56"CA

FIGURE B - SUPER DUTY F-SERIES SUB MOUNTING TECHNIQUE #2

DESIGN RECOMMENDATIONS
SECOND UNIT BODY MOUNTING

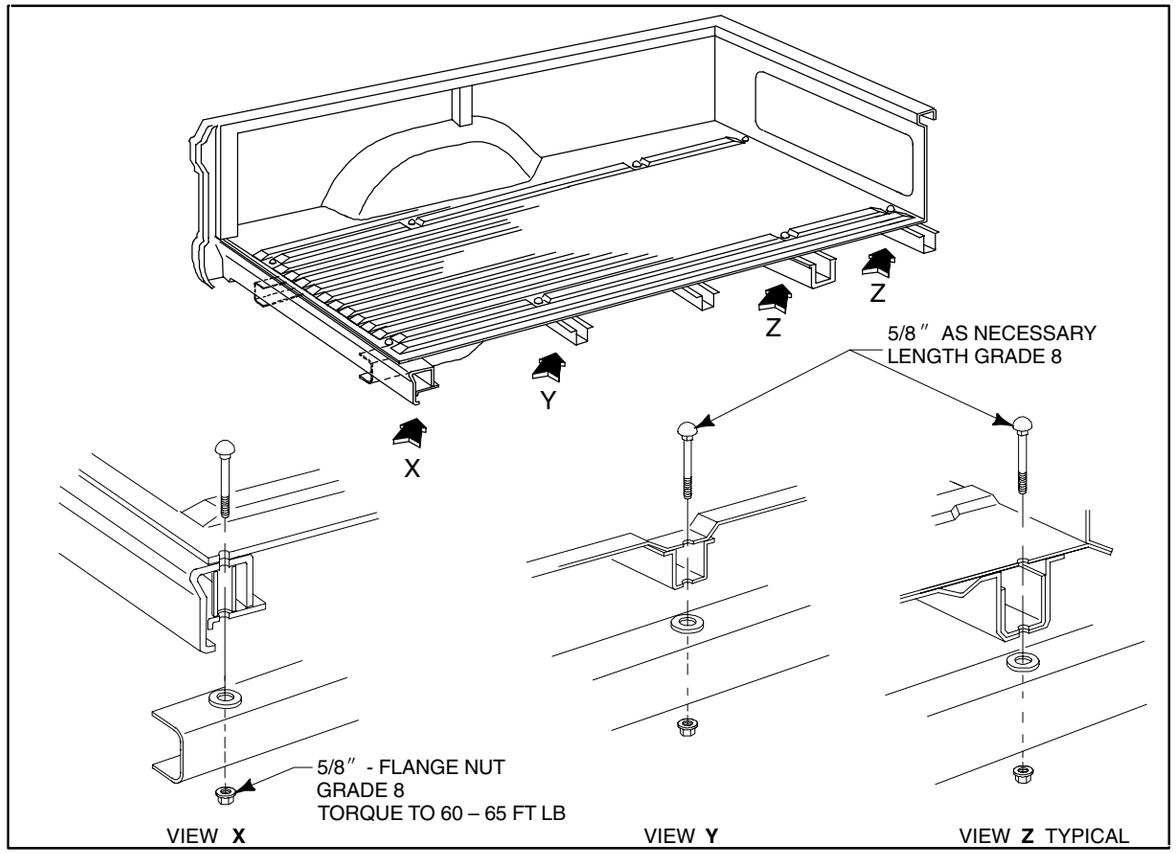

FIGURE C - SUPER DUTY F-SERIES SUB MOUNTING TECHNIQUE #3

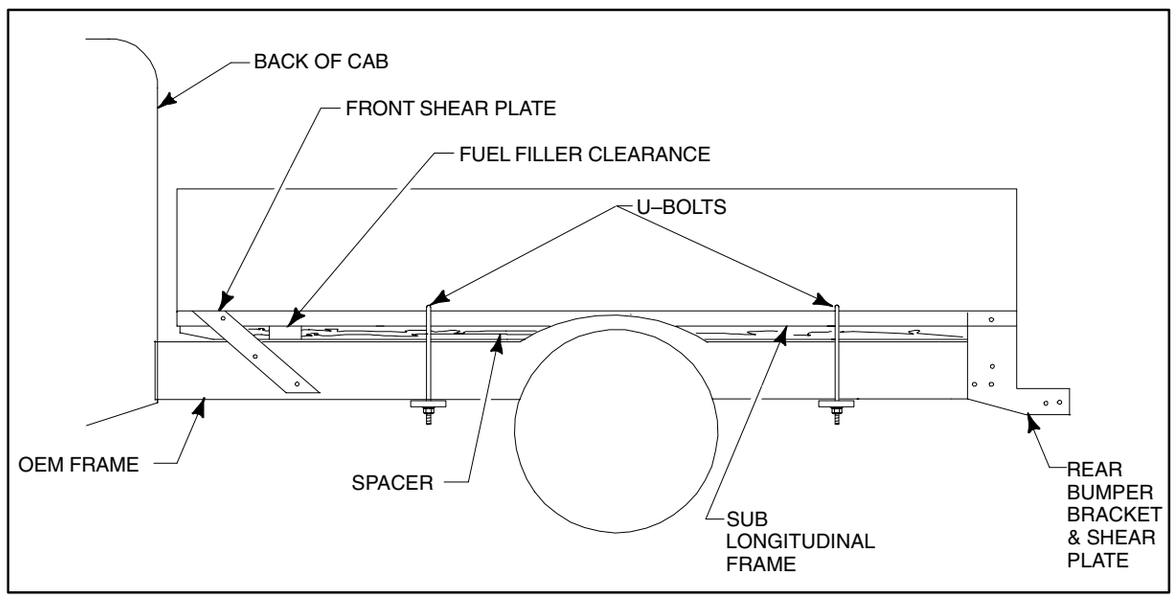

BB0322

FIGURE D - SUPER DUTY F-SERIES SUB MOUNTING TECHNIQUE #4

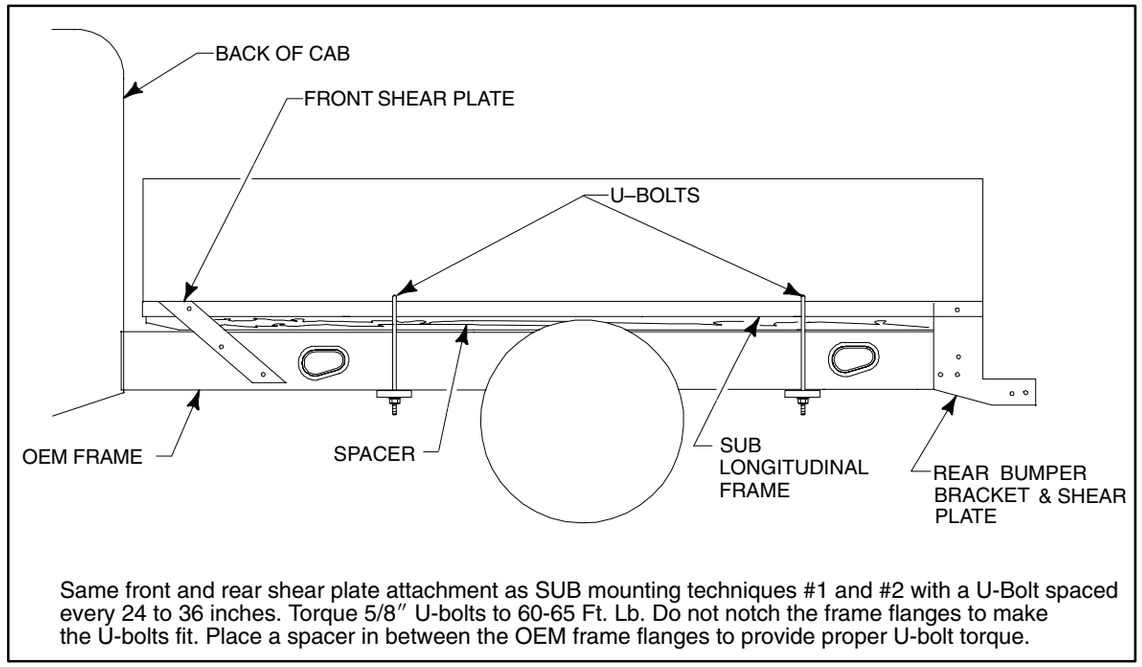

Same front and rear shear plate attachment as SUB mounting techniques #1 and #2 with a U-Bolt spaced every 24 to 36 inches. Torque 5/8″ U-bolts to 60-65 Ft. Lb. Do not notch the frame flanges to make the U-bolts fit. Place a spacer in between the OEM frame flanges to provide proper U-bolt torque.

FIGURE E - SUPER DUTY F-SERIES SUB MOUNTING TECHNIQUE #4 FOR 60″, 84″, AND 120″ CA CHASSIS CABS.

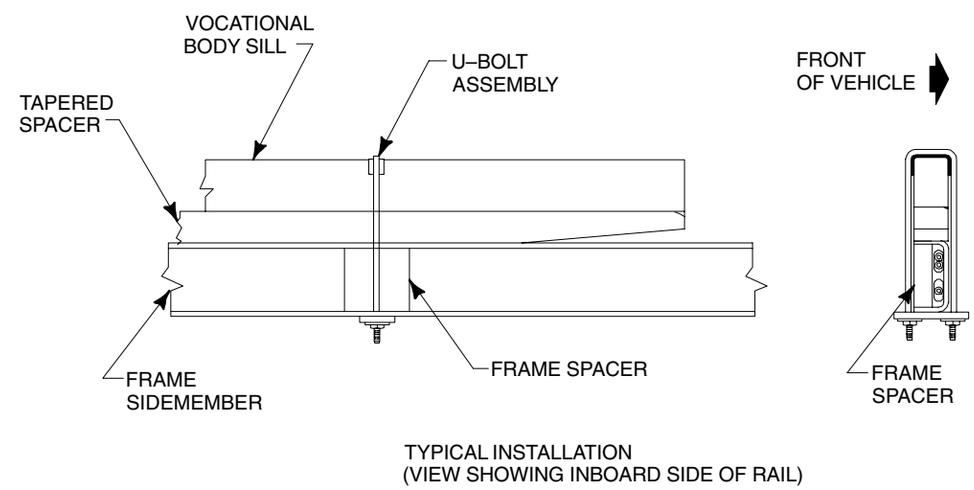

Where wrap around body attachments (such as U-Bolts) are used, the frame sidemembers must have flange reinforcement spacers to avoid flange damage when full torque is applied to attaching bolts. Spacers are recommended and must be cut out to clear brake lines, fuel lines, wiring, etc. If metal spacers are used, no welding to frame sidemembers is permitted.

Tapered spacers between vocational-body sill and frame sidemember flanges are recommended. (see sketch for typical installations).

Periodic checking of body attachments for torque retention is highly recommended.

A minimum of one set of shear plates per side is recommended. Also, one set of side shift plates should be attached to vocational-body sills per side.

FIGURE F - SUPER DUTY F-SERIES SUB FRAME SPACER FOR U-BOLT.

FUEL SYSTEM

INFORMATION

The following recommendations are intended to assist in the design and completion of the fuel system capable of meeting the requirements of F/CMVSS 301. These recommendations are based on testing and analysis performed by Ford Motor Company.

Since completed vehicles may take many forms, this list of recommendations cannot cover all possibilities. Strict adherence to these suggestions will not ensure that the completed vehicle will comply with F/CMVSS 301. The responsibility for determining compliance to F/CMVSS 301 regulations is that of the final stage manufacturer. Accordingly, Ford Motor Company makes no representations as to the appropriateness of any particular recommendation in its specific application to a particular design or act of intermediate or final stage manufacture.

To verify compliance with F/CMVSS 301, testing of representative vehicles to applicable F/CMVSS 301 procedures may be necessary. Questions regarding compliance with F/CMVSS regulations should be directed to your legal counsel, the National Highway Traffic Safety Administration, or Transport Canada.

Any alteration or modification of a vehicle's fuel or evaporative system may affect the vehicle's compliance with applicable federal and state emission laws, including on-board diagnostics (OBDII) and evaporative emissions requirements, and may also effect vehicle performance (driveability, idle quality, etc.). Vehicle modifiers are responsible for ensuring that a vehicle, as modified, complies with all applicable emissions regulations and for obtaining any necessary federal or state approval or certification relating to vehicle modification or sale of add-on or auxiliary parts.

WARNING:
BEFORE OPENING THE FUEL SYSTEM ON VEHICLES WITH EFI ENGINES, RELIEVE FUEL PRESSURE BY FOLLOWING THE INSTRUCTIONS IN THE *FORD TRUCK SHOP MANUAL* FOR THE APPROPRIATE MODEL AND MODEL YEAR.

WHEN WELDING NEAR FUEL SYSTEM COMPONENTS, ALL METALIC COMPONENTS SHOULD BE ADEQUATELY SHIELDED AND PROTECTED FROM HEAT OR WELD SPLATTER. ALL NON-METALLIC COMPONENTS SHOULD BE REMOVED.

REMOVAL OR REINSTALLATION OF ANY FORD FUEL SYSTEM COMPONENT SHOULD BE PERFORMED TO THE SPECIFICATIONS AND INSTRUCTIONS FOUND IN THE *FORD TRUCK SHOP MANUAL* FOR THE APPROPRIATE MODEL AND MODEL YEAR. (EXCEPT FOR E-SERIES VAN AFT-OF-AXLE TANK INSTALLATIONS, SEE THE FOLLOWING NOTE).

E-SERIES VAN AFT-OF-AXLE FUEL TANK

A Fuel System Modification Kit is available for some E-Series products for removing the midship fuel tank and adding an aft-of-axle fuel tank. This kit is distributed by:

TDM
13000 Farmington Rd., Livonia MI 48150
Phone: (800) 540-3913
Fax: (734) 458-9118

* The modifier is responsible for determining if the vehicle as modified with this kit meets an applicable safety & emission regulations and is properly certified.

A. NEW FUEL TANKS

1. The fuel tank should be designed with as few openings and connections as possible. Openings and connections generally should be located on the upper surface of the fuel tank.
2. Fuel tanks should be fitted with an evaporation control valve having the means to close if the vehicle is rotated about a longitudinal axis pursuant to F/CMVSS 301.
3. The tank should be of simple configuration minimizing sharp surface transitions and protrusions which may be required for attachment or function.
4. The tank should be strong enough to withstand instantaneous internal pressure imposed in the event of crash situations.
5. Hoses connected to the tank should be sufficiently flexible to permit small movements of the tank relative to fixed mounting surfaces, without rupture or disconnection of such hoses in the event of crash situations.
6. Emission regulations may require an OBDII fuel tank pressure sensor for the evaporative system. Any new fuel tank must be tested and comply with all emission regulations, including evaporative emissions.
7. Package new tank away from heat sources such as exhaust.

B. NEW FUEL TANK RETENTION SYSTEMS

1. The retention system should attach the fuel tank to the frame, between the frame rails, and below the body of the vehicle with sufficient clearance for normal body to frame movement under loaded conditions.
2. A retention system should restrict fuel tank movement in all possible directions to prevent contact or rupture with rigid or sharp objects, and the disconnection of fuel system tubes and hoses under crash conditions. Retention straps should avoid sharp edges and tank supports should be designed with fuel tank compatible surfaces and edges to the fuel tank.
3. System fasteners and attachments should be designed to retain the tank during deflections incurred in crash situations.

TEMPORARY 7.5 GALLON FUEL TANK

Vehicles equipped with a 7.5 gallon temporary fuel tank (for transit shipping only) will require the subsequent stage manufacturer to dispose of this tank in an appropriate manner. The permanent aft-of-axle tank requires a 10 gallon minimum initial fuel fill to dilute the Ford provided anti-corrosion solution in the tank

C. FUEL FILL SYSTEM

1. Fill system should be sufficiently flexible to prevent possible rupture or disconnection resulting from movement of the fuel tank relative to frame during crash situations. Use the original pickup truck filler if the fill location is similar to the original pickup truck location. For Ranger, user Ranger Fuel Fill Kit #IL5Z-9B149-AA.
2. Any appliance or hardware attachments to the body in the area of a fuel system component should be designed, positioned, and secured so as not to impact any fuel system component during crash situations.
3. The fuel filler opening area of the body should provide adequate sealing from the vehicle interior because holes or cracks in this area may allow fuel vapors to enter the vehicle interior. Openings should be sealed with a product which is fuel resistant. See Figure A on this page.
4. The metal outer end of the fuel fill neck tube provided by Ford must be properly grounded to the chassis to dissipate any electrostatic charge that may be produced and so reduce the possibility of a spark during fueling. A fill neck support made of metal would provide a ground path if directly mounted on the chassis. If the filler neck support is made of plastic or other non-metallic material, a ground strap or wire must connect the metal end of the fuel filler neck and a metal chassis component.

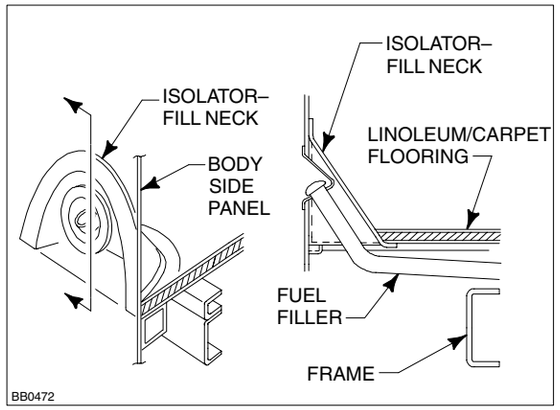

FIGURE A – BODY MOUNTED FUEL FILLER OPENINGS

5. Fill openings should be recessed, and caps, when installed, should be inside the normal body plane.
6. Whenever possible, the fill system should pass under the body rather than through it. Where passing through floors and sides, the fill system should be shielded and have adequate clearance to surrounding structure. Fuel Filler and Vent Hoses should maintain a minimum of one inch clearance to body and surrounding chassis components, except where the hoses and protective sleeve material pass through the designed frame opening.
7. Be sure that the fuel tank filler cap is the correct Ford designated part. Provide adequate hand clearance for cap installation and correct sealing of the cap to filler pipe.
8. The recommended horizontal and vertical locations for the fuel tank filler pipe is shown on page 119 (E-Series), pages 175-176 (Super Duty F-Series) and page 216 (Ranger).

SUPER DUTY F-SERIES CHASSIS CAB 60", 84", AND 120" CA		
Standard	Aft Axle Fuel Tank	Kit #F81A-9B149-C
Optional	Midship Fuel Tank	Kit #F81A-9B149-A
BOX DELETE 56" CA		
Standard	Midship Fuel Tank	Kit #F81A-9B149-E

Other parts that can be ordered/purchased separately:

SERVICE PART NUMBERS	PART DESCRIPTION
E0TZ-9040-A	Support (unskirted body)
D702-9A095-A	Label – Unleaded Fuel
E432-9A095-A	Label – Diesel Fuel

C. FUEL FILL SYSTEM (CONT'D)

9. When installing accessories or equipment, avoid exposure of fuel and vapor hoses to surfaces with sharp edges (see Figure A on this page) or high temperature surfaces (near hot exhaust or coolant). Also avoid installations which result in the exposure of these lines to road debris or undercoating, except as specified on page 231.
10. Install or route fuel tank filler hoses and filler vent hoses as follows:
    a. Avoid sags below the horizontal which allow fuel puddling (i.e., avoid sink traps). See Sink Traps in Figure A. Fuel trapped in low spots can be expelled when the cap is removed, even if the tank is nearly empty.
    b. Avoid pinches or kinks, as they restrict fuel filling or venting. Hose length may require adjusting depending on second unit body width. See Kinked Fuel Fill System, Figure A.
    c. Do not place adjacent hardware such that it may cut or otherwise damage the filler neck and vent hoses and cause fuel or vapor leakage (i.e., avoid unfriendly surfaces) see Hostile Surfaces, Figure A.
    d. Keep the flow of fuel continuously downward from the inlet of the fuel filler pipe all the way to the tank.
    e. The filler hose and vent hose must be clear of moving suspension components so as to prevent abrasion which can result in fuel leakage. They should maintain a minimum of 1 inch clearance to body and surrounding chassis components, except where the hoses and protective sleeve material pass through the designed frame opening.
    f. Be certain that all clamps are secure and properly located.
    g. The fuel filler and filler vent hoses should not contain fittings or connections other than those incorporated in the original design, nor should they be interconnected with each other in any way.
    h. Ford released parts should be used.

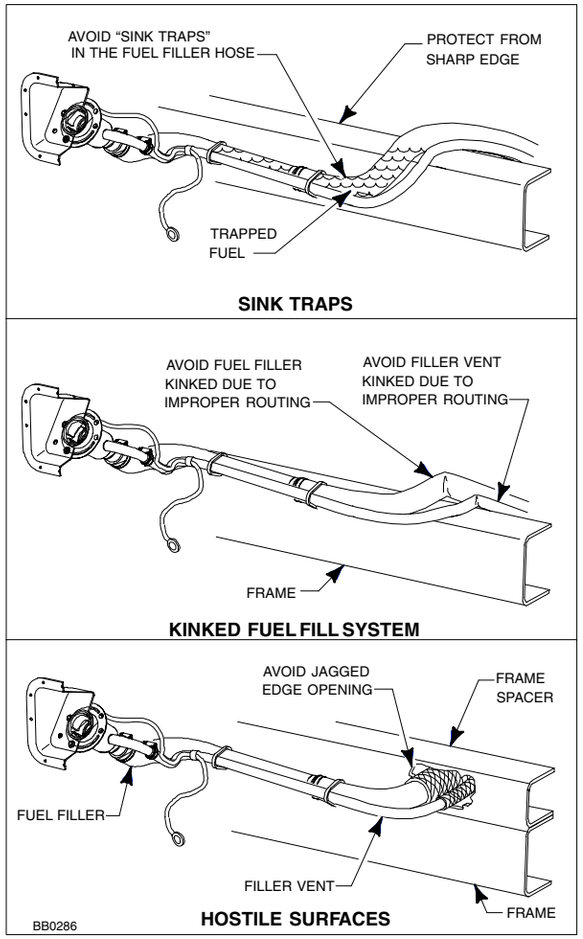

FIGURE A – FUEL FILL SYSTEM INSTALLATION CONDITIONS TO BE AVOIDED

D. FUEL TUBES, HOSES AND PUMPS

1. Do not reroute or change the attachment of fuel lines or fuel vapor hoses. Doing so may alter the vehicle's ability to comply with F/CMVSS 301, Fuel System Integrity, and may adversely affect vehicle performance by increasing the amount of heat absorbed by the fuel system or by restricting its venting.
2. Tubes and hoses should be routed away from and not attached to members that will move or deform during crash situations.
3. Tubes and hoses must be sufficiently flexible to avoid rupture or disconnection resulting from movement of the engine relative to the frame during crash situations.
4. Tubes and hoses should be routed away from hot regions and sharp objects and should be retained adequately to prevent movement into such regions or against such objects.
5. Do not add fuel or vapor line flow restrictors as they can cause engine fuel starvation or abnormally high fuel tank pressures.
6. Do not install auxiliary fuel pumps. This could cause the engine to run rich, producing additional exhaust heat.
7. If the push connectors on nylon fuel lines are disconnected, they must be reconnected as shown in Figure A on the next page, and the retention clip must be discarded and replaced with a new clip as specified in Figure A on the next page.
8. The special removal tool shown in Figure B on the next page must be used to open push connectors installed on flexible fuel lines if the lines need to be disconnected. The appropriate tool is available from Ford Customer Service Division.
9. The push connectors on flexible fuel lines, if disconnected, must be reconnected by snapping them back into position and installing the appropriate retainer as shown in Figure B on the next page.
10. Avoid pinching or kinking of any fuel vapor hose. (See Figure B below).

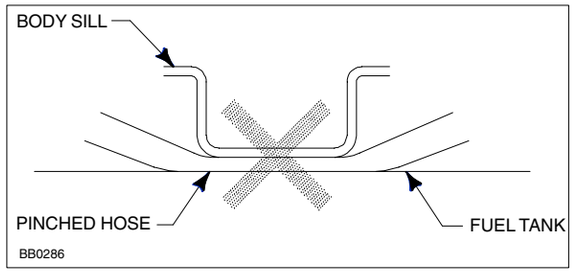

FIGURE B – FUEL VAPOR VENT LINES

11. Each of the fuel lines and fuel vapor hose retention clips provided by Ford must be used in original factory locations to prevent misplacement or movement of the lines.
12. Be certain that the vent valves on top of the fuel tanks are seated and secure; do not dislodge or damage them when mounting the second unit body. If they are unseated, fuel leakage may occur. If damaged, the vapor vent system may not function, resulting in increased fuel tank pressure.
13. If a fuel sender is removed for any reason, use a new gasket when it is reinstalled so as to prevent fuel leaks. Be certain the fuel sender is seated and secure on the top of each fuel tank. Do not step upon or place weight upon the sender during vehicle manufacture. See page 119.
14. Fuel filters installed in the fuel supply line must be of sufficient size to be nonrestrictive to fuel flow and placed so as to be protected from exposure to exhaust heat and physical damage. Ford replacement fuel filters are recommended. Filters are not to be installed in the fuel return line.
15. **Temporary shipping fuel lines are not to be reused**. They should be disposed of in an appropriate manner.
16. Fuel system components which are disconnected during manufacturing should be capped or plugged promptly to prevent possible contamination.
17. When welding near fuel system components, all metallic components must be adequately shielded and protected from heat or weld splatter. All nonmetallic components must be removed.

E. FUEL SYSTEM ACCESS FOR AXUILIARY FUEL POWERED EQUIPMENT

Precautions similar to those described in this Fuel System section should be taken in the design and positioning of a fuel system for auxiliary fuel-powered equipment. The auxiliary fuel-powered equipment should be securely mounted so as to withstand forces during crash situations.

E-Series Super Duty Cutaway/Chassis Cab, Super Duty F-Series, and E-Series Super Duty Stripped Chassis aft-of-axle fuel tanks are equipped with an auxiliary fuel port in the fuel sender unit. The purpose is to provide a fuel supply for fuel powered accessories such as generator sets.

E-Series van vehicles may have an optional auxiliary fuel port which is located on the midship fuel tank sender unit.

Final Stage Manufacturers that utilize the auxiliary fuel port must install a check valve because of Onboard Fuel System Diagnostics (OBDII). The system may affect the vehicle's compliance with applicable Federal/ State emissions laws. Additional information is available in Bulletin Q-42. To obtain a copy, log on to www.fleet.ford.com/truckbbas/ and select from the list of Bulletins required.

All auxiliary fuel ports have a safety cap which must remain in place until a fuel consuming accessory is installed.

E-Series van vehicles equipped with the auxiliary fuel port have a braided jumper hose which provides access without removing the fuel tank. A cap removal tool is provided on the jumper line immediately behind the cap and must be removed and reversed before it can be used to remove the cap.

A push connector F7UA-9J274-AA, available from your local Ford dealer, will attach to the auxiliary fuel port and accept a 1/4 inch hose and clamp. See page 119.

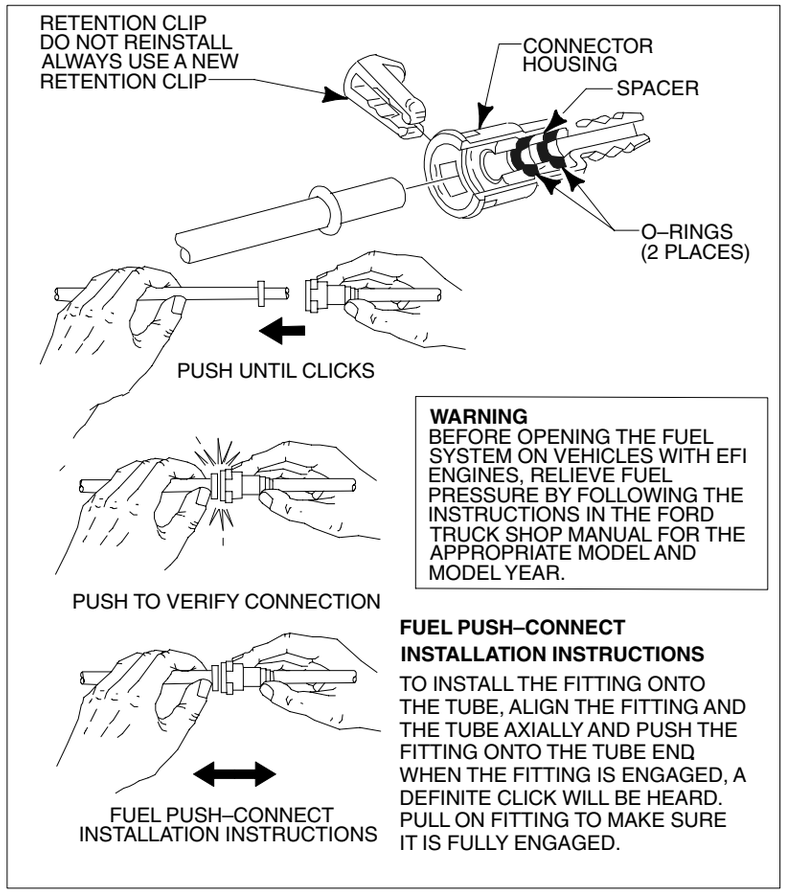

FIGURE A – NYLON FUEL LINE PUSH-CONNECT

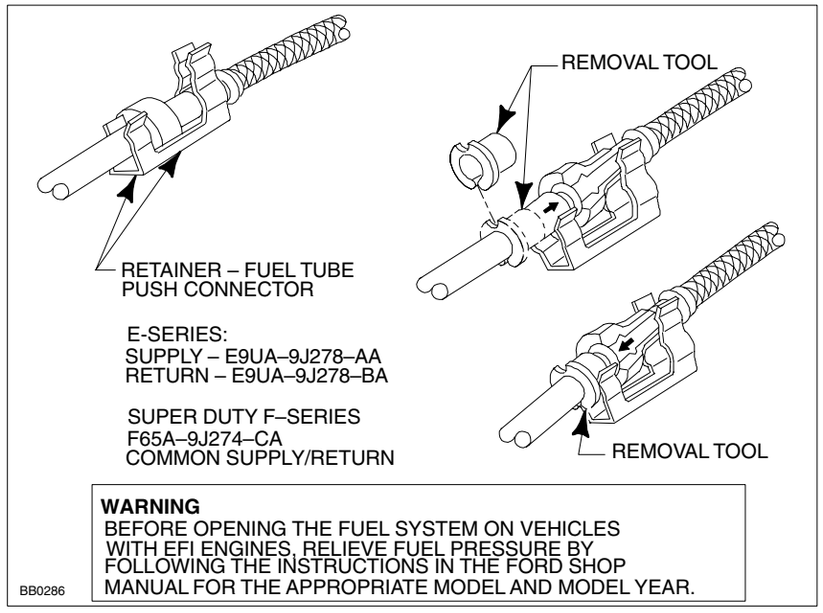

FIGURE B – FLEXIBLE FUEL LINE PUSH-CONNECT

COOLING SYSTEM

1. Equipment such as flashing lights and sirens, spare tires or any other accessories should not be installed in the grille area forward of the radiator or air cleaner air inlet. Doing so restricts proper air flow through the radiator and engine compartments. E-Series and Super Duty F-Series are illustrated in the figure below.
2. For proper engine cooling, do not alter, change the locations of, or remove the original equipment fan, fan clutch, or shroud.
3. Maintain a 50/50 mixture of ethylene glycol-based antifreeze-to-water ratio when adding or modifying the heater system or auxiliary heater system. A 60/40 antifreeze-to-water ratio may be necessary during winter months in very cold climates. For the remainder of the year, however, a 50/50 ratio should be maintained.
4. Use worm gear drive clamps only.
5. Upper radiator hoses and heater hoses, which are added or replaces, should be EPDM-Kevlar composition. Lower radiator hoses should be EPDM-Rayon composition.
6. The radiator and fan shroud should not be used as structural members and additional components should not be attached.
7. Revisions to the Front End Accessory Drive System may affect the cooling system/component performance and are not recommended.
8. Do not alter or modify the automatic transmission water bypass system.
9. The minimum radiator grille opening (excluding all grille parts) for the E-Series Stripped Chassis, to provide optimum cooling for the engine, is 300 sq. in.
10. Equipment, hazardous materials markers, or placards must not obstruct the airflow to the radiator or the air cleaner inlet on the E-Series Super Duty Stripped Chassis.
11. The E-Series Super Duty Stripped Chassis engine compartment must be designed to eliminate any air circulation restriction that would affect the air induction or cooling systems. An engine compartment must provide adequate flow-through ventilation to prevent local air temperature from exceeding recommended maximums.

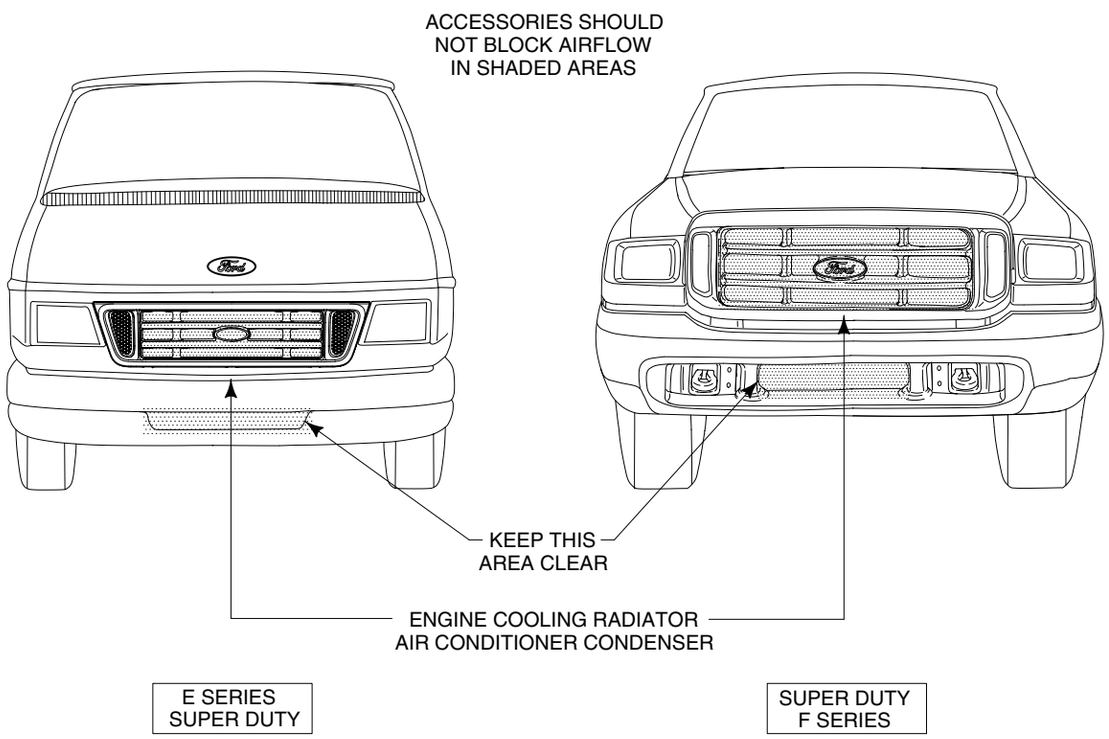

BB0482 2003

CLIMATE CONTROL SYSTEM

1. An Auxiliary Heater A/C Connector Package can be either standard or optional on E-Series vehicles for connecting auxiliary climate control systems to the Ford system. The following items are important for the maximum efficiency of the combined systems:
   - The connector tubes are under the floor directly below the driver's seat.
   - The heater supply tube is identified with a white paint dot and should be connected to the lowest connection port on the auxiliary heater core.
   - The A/C connector tubes have a 20 x 1.5-6g metric thread for high pressure and 24 x 2.0-6g metric thread for low pressure.
   - If the vehicle is equipped with the auxiliary heater-air conditioner, do not operate the front A/C system prior to the addition of an auxiliary system. The system oil could settle in the connector tubes and not provide lubrication to the compressor. See Bulletin Q-47. To obtain a copy, log on to www.fleet.ford.com/truckbbas/ and select from the list of Bulletins required.
   - The Ford provided auxiliary blower switch requires an electric relay for high-speed blower operation. Additional detailed information is available in Bulletin Q-19. To obtain a copy, log on to www.fleet.ford.com/truckbbas/ and select from the list of Bulletins required.
2. R134-A charge A/C systems must use PAG-type lubricating oil YN-12-B, Ford part number F2AZ-19577-C. Always use the same refrigerant and lubricating oil as originally equipped by Ford.
3. Maintain a 4% suspended oil ratio in the A/C system for proper compressor lubrication.
4. E-Series A/C and Refrigerant Oil System are classified into the following (3) types:

A/C System	R-134A lb	PAG Oil oz
Front Only [1]	2.75	9[a]
Front w/Prep Unit	2.75	13
Front & Aux. Unit	4.0	13
[1] **Must add 1-oz Oil for each 4-oz of R-134A above Ford's charge**.		

   A label stating the total refrigerant charge, type of refrigerant (R-134A), and type of compressor lubricant oil (PAG) used, should be affixed in a conspicuous place in the engine compartment.
5. The A/C compressor will cycle during the defrost mode. A refrigerant shut-off valve for the auxiliary system may impair compressor lubrication.
6. R-134A charged A/C systems should use barrier type A/C hose. Barbed fittings and external clamping may not be compatible with this type of hose. Swaged, permanent fittings on this type of hose are recommended.
7. Use only worm gear drive clamps on heater hose.
8. **NEVER ATTACH ANY COMPONENT TO THE TRANSMISSION FILLER AND DIPSTICK TUBE**.
9. Auxiliary heater and air conditioning systems hose routings must consider the following:
   - Dynamic engine roll or any system component which has an operating zone. Make sure there is adequate clearance (e.g., transmission downshift linkage, steering column shift linkage).
   - Do not route heater or A/C hoses directly over or near the exhaust system.
   - Do not route hoses by attaching to the engine.
   - Use only metallic "Y" and "T" type fittings.
   - Do not route hose in wheelhouse area.
   - Do not route by sharp edges or moving component parts. There must be shield protection from any potential abrasive source.
   - When routing in stone kickup area, lines should be protected by shields. Minimize use of concentric protective heater hose shields. Limit length of concentric hose shields to 305 mm [12 in] maximum.

EXHAUST SYSTEM

WARNING:

VEHICLE OPERATING TEMPERATURES

SOME TRUCKS OF FORD MOTOR COMPANY MAY EXHIBIT HIGH ENGINE COMPARTMENT AND EXHAUST SYSTEM TEMPERATURES IN CERTAIN OPERATING MODES. COMPONENTS, INCLUDING EXHAUST HEAT SHIELDING SYSTEMS, HAVE BEEN INSTALLED AS STANDARD EQUIPMENT ON SOME VEHICLES IN OUR ASSEMBLY PLANTS IN AN EFFORT TO PROVIDE THERMAL PROTECTION AGAINST SUCH TEMPERATURES. AFTERMARKET EQUIPMENT INSTALLERS OR INTERMEDIATE AND FINAL STAGE MANUFACTURERS ARE RESPONSIBLE FOR PROVIDING THERMAL PROTECTION (e.g., UNDERBODY HEAT SHIELDS) FOR ANY STRUCTURE OR EQUIPMENT ADDED TO THE VEHICLE AND SHOULD NOT REMOVE ANY COMPONENTS OR EXHAUST HEAT SHIELDING INSTALLED ON THE VEHICLE BY FORD.

1. Do not substitute exhaust system components or add to those furnished by Ford, except as noted in this section. Such a substitution or addition may adversely affect engine performance or emissions system effectiveness.
2. Do not change the position or routing of the exhaust system components. Such a change may affect the amount of heat transferred to body, chassis, or powertrain components, particularly fuel system components. Specifically, do not add dual exhausts or reroute exhaust components to the left side of the vehicle.
3. Do not remove or modify the existing shields. Ford underbody heat shields are installed on vehicles to provide heat protection for the vehicle floor and body mounting system, and must remain in place on the completed vehicle. (See Figure A.)
4. Exhaust heat shields should be added by a body builder, and should extend far enough beyond the exhaust system components to protect underbody surfaces from heat radiated at any angle. Add shields over the muffler and exhaust pipe kick-up areas.
5. Do not remove Ford furnished exhaust clamps and hangers.
6. An additional exhaust hanger should be installed, if appropriate, to support extended tailpipe length necessitated by body dimensions.
7. Do not make a rigid connection between the exhaust system and the body.
8. Do not apply body undercoating on the fuel tank, fuel fill hose, or fuel fill vent hoses. The extra insulation on these components may cause excessive heat build-up or possible material incompatibility concerns. (See Figure B.)
9. Do not apply body undercoating within twelve inches of the are directly above the exhaust, on any components within twelve inches of the exhaust, or to any part of any exhaust system. Undercoating will smoke or burn if subjected to high heat. (See Figure B.)

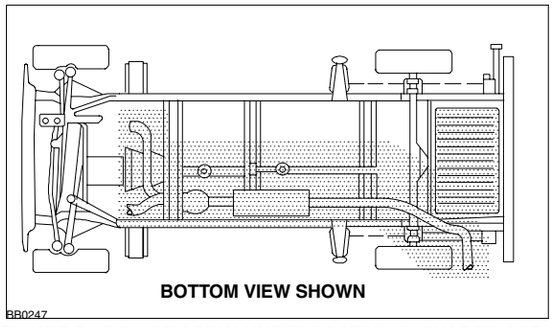

FIGURE B - DO NOT APPLY UNDERCOATING IN SHADED AREA

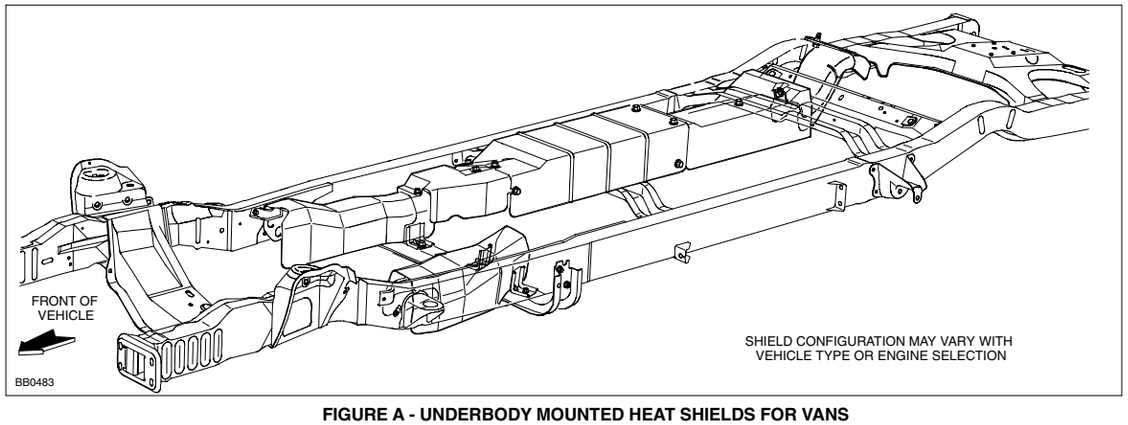

FIGURE A - UNDERBODY MOUNTED HEAT SHIELDS FOR VANS

10. Extensions to the exhaust outlet pipe should direct exhaust away from the body to minimize the possibility of fumes entering the vehicle. Extensions should also protrude beyond the vertical body surface.
11. Install all underbody plumbing for heaters, air conditioners, and other accessories so that they are not installed against sharp surfaces or jagged edges. Protect from exhaust heat when routing.
12. Use only stainless steel for any exhaust system modifications or additions.
13. Exhaust system revisions should consider thermal expansion of materials and the affect on design clearances.

FORD BODY COMPONENTS

1. Modifications to doors, roof, or body side panels may have an affect on F/CMVSS 208, 210, 212, 214, 219, and 301 compliance. Refer to the Statements of Conformity section in the *Incomplete Vehicle Manual* for compliance representations.
2. Running boards or entry steps should use a mounting system that will attach only to the body. The Ford body to frame isolators allow body movement which may loosen fasteners. A combined frame and body mounting system may cause frame Noise, Vibration, and Harshness (NVH) transfer through such a mounting system into the body.
3. Use a butyl type sealer on trimmed body sheet metal panels to prevent corrosion.
4. Temporary mounting pads may eliminate chipping and scratches when accessories are installed.
5. Select materials which will not have a corrosive action with each other.
6. Additional fresh air vents should be located so that engine exhaust cannot be drawn into the vehicle.
7. When adding holes to the floor of the vehicle, consideration must be given to all components below the floor. The use of drill stops is recommended. A pattern for a floor template, which will locate the E-Series Van fuel tank, is available from the Ford Truck Body Builders Advisory Service.
8. Fasteners added to the floor should not point at the fuel tank or should have an appropriate shield. Components with sharp edges should have an appropriate shield to eliminate the possibility of fuel tank penetration in crash situations.
9. Components added to the E-Series engine cover should allow for easy removal. Refer to the Statements of Conformity in the *Incomplete Vehicle Manual* or Figure A on page 41 of this book for Occupant Protection Zone requirements for the engine cover and other affected areas.
10. The E-Series engine cover seal requires that carpeting and insulation should be installed as shown in Figure C.
11. Power operated windows, a partition, or roof panel systems when added to a vehicle with a GVWR of 4536 [10,000 lb] or less must comply with the requirements of F/CMVSS 118, refer to the Statements of Conformity in the *Incomplete Vehicle Manual*.
12. When a Second Unit Body (SUB) or rear closure panel is attached directly to the cutaway body, difficulty may be experienced when closing doors due to air pressure build up. It is recommended that vent(s) be installed which will allow “ONE WAY” pressure release from the inside of the cab to the outside. Recommended minimum size of the venting is 36 square inches.

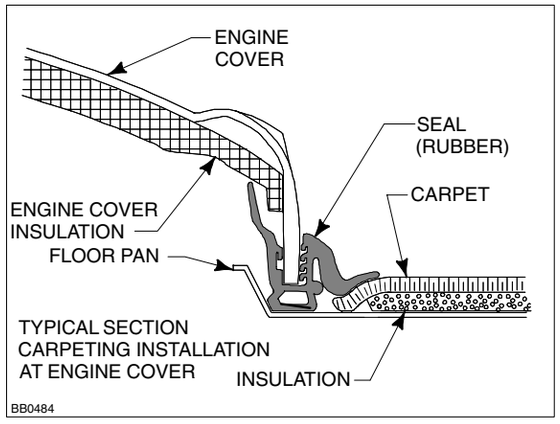

FIGURE C - E-SERIES ENGINE COVER SEAL

WHEELS AND TIRES

WARNING:

SOME AFTERMARKET WHEEL ASSEMBLIES MAY NOT BE COMPATIBLE WITH SOME VEHICLES AND SHOULD NOT BE USED. USE OF INCOMPATIBLE WHEEL ASSEMBLIES MAY RESULT IN WHEEL FRACTURES, SEPARATION, WITH THE POTENTIAL FOR AN ACCIDENT, AND INJURY TO OCCUPANTS. FORD RECOMMENDS THAT ONLY WHEEL ASSEMBLIES APPROVED AND RELEASED BY FORD MOTOR COMPANY FOR THE VEHICLE MODEL SHOULD BE USED.

WARNING:

RE-TORQUE ALL LUG NUTS TO SPECIFICATION. IT IS IMPERATIVE THAT THE DEALER RETORQUE ALL WHEEL LUG NUTS ON ALL VEHICLES PRIOR TO DELIVERY TO THE FINAL VEHICLE PURCHASER. DUAL REAR WHEEL VEHICLES MAY BE SHIPPED WITH THE OUTER REAR WHEELS REMOVED AND, THEREFORE, THE DEALER MUST ENSURE THAT THE LUG NUTS ARE RETORQUED TO THE PROPER SPECIFICATION BEFORE THE VEHICLE IS DELIVERED TO THE FINAL VEHICLE PURCHASER. IMPROPERLY TIGHTENED LUG NUTS COULD LOOSEN AND ALLOW THE WHEEL TO COME OFF WHILE THE VEHICLE IS IN MOTION, CAUSING LOSS OF CONTROL.

1. Use only wheels with the same load capacity, rim width, rim offset, and mounting configuration as those originally installed on the vehicle. Consult an authorized Ford Dealer for correct wheel load capacity, size, and usage. Wheels used must conform to the F/CMVSS 120. The use of any wheel or tire, other than those originally installed on the vehicle as manufactured by Ford, may adversely affect load carrying capacity, handling, bearing life, ride, braking performance, speedometer/odometer accuracy, automatic transmission shift timing, and tire/wheel clearance of the body and chassis.
2. Use only tires with the equivalent load-carrying capacity as those originally installed on the vehicle. Use only tires of a type and size that are recommended by the vehicle manufacturer and are compatible with the wheel installed on the vehicle. Do not over or under inflate tires, always maintain proper tire pressure. Never mix radial, bias-belted, or conventional bias type tires, and avoid mixing P and LT metric tires with alphanumeric tires whenever possible. Consult an authorized Ford Dealer for correct tire load capacity, type, size, and inflation pressure for the vehicle. Tires used must conform to FMVSS 119 (non-passenger car type tires) in the United States, or to the Motor Vehicle Tire Safety Regulations in Canada.
3. If you loosen or remove wheel lug nuts for any reason or have in your possession a vehicle at any of the mileage intervals listed in the Wheel Lug Nut Table below; check the lug nut torque and re-torque to the specifications as listed in the table.

WHEEL LUG NUT TABLE

	MILEAGE		WHEEL LUG NUT TORQUE	
VEHICLE TYPE	**KM**	**MILES**	**Nm**	**Ft/Lb**
E-Series				
E-150	800	500	135	100
E-250/350 SRW	800	500	190	140
E-350/450 DRW	160	100	190	140
	800	500		
F-Series				
Super Duty F-250/350 SRW	800	500	200	145
Super Duty F-350/450/550 DRW	160	100	200	145
	800	500		
Super Duty Class A Motor Home Chassis (F53)	160	100	200	145
	800	500		

SUSPENSION AND STEERING SYSTEM

NOTICE – VEHICLE HANDLING INFORMATION

The weight of the body structure and its center of gravity location (both longitudinally and vertically), as well as the weight and positioning of the cargo load, are important to the handling of the completed vehicle. Subsequent stage manufactures should note that matching a body to a chassis in a manner appropriate for the intended use of the vehicle is the responsibility of the final-stage manufacturer. Following the representations in this book or the IVM Manual, with respect to center of gravity locations and body weights for compliance with Federal or Canada Motor Vehicle Safety Standards, is only part of the task of producing a completed vehicle that handles appropriately in service.

IMPORTANT:
The final-stage manufacturer is responsible for verifying that the front wheel toe is within Ford specifications on completed vehicles. The steering wheel clear vision (horizontal or level orientation of the steering wheel) should also be maintained when resetting wheel toe. These specifications are found in the General Suspension section of the *Ford Shop Manual*.

1. Front end alignment warranty policy for incomplete vehicles is based upon the completed vehicle remaining within OEM weight ratings, vehicle attitude, suspension and wheel/tire guidelines, and other characteristics affecting wheel alignment. Exceeding or modifying these restrictions may jeopardize related warranty.
2. Modifications made by subsequent stage manufacturers, particularly those that significantly affect vehicle ride heights, may cause vehicle control problems during excessively sharp turns or other abrupt steering maneuvers, possibly leading to rollover or other accidents that could result in death or serious injury.
3. The steering gear, intermediate shaft, coupling shaft, linkage, column, and steering wheel should not be altered or relocated. Steering linkage travel should not be restricted.
4. Ford front and rear GAWRs and GVWR must not be exceeded.
5. Front or rear suspension components should not be drilled, cut, welded, or relocated for any reason.
6. Welding to the frame in the steering gear area is not recommended.
7. If rear suspension spacers are used between the spring and axle seats to accommodate side-to-side variations, they should not exceed 3/8 inch. The spacers should not exceed the profile of the axle spring seat. Additional spacing may adversely affect driveline angles and axle system package clearance. Also affected are spring stress limits from excessive jounce travel.
8. Do not use any suspension component as a welding ground.
9. When welding or cutting near suspension components, shield and protect all springs and rubber components from heat penetration and welding splatter.
10. Any add-on device mounted on the steering column, shroud, multifunction switch, or gear selector lever, must not affect steering column angles, tilt mechanism (if so equipped), range of operation, or steering column mounting hardware. Any such device must not interfere with steering column collapse stroke travel during crash situations or air bag deployment.

ENGINE

1. Refer to the Emission Control Modifications on Safety/Emission pages 44-47 prior to making modifications to any engine component that could affect the emission certification.
2. Gasoline engine conversion guidelines for Liquefied Petroleum Gas (LPG) or Compressed Natural Gas (CNG) are in the Alternative Fuel pages of Safety/Emission section of this book.
3. The engine should not be operated with the hood up or removed. This may allow excessive unforced air to circulate that could adversely affect the cooling system.
4. Do not use manual throttle kickers
5. When using electric throttle kickers on gasoline engines, set the high idle RPM at as low as possible to obtain the required performance. The idle speed must be set when the engine is at normal operating temperature and under normal load. This RPM setting should be affixed to the vehicle and should be checked after the 2,000 mile brake-in engine tune up. This informations should be provided to the purchasers. The addition of throttle kickers may affect electronic transmission operation.
6. An auxiliary crankshaft bearing support is required on all modular gas engines before a FEAD-mounted PTO can be installed. Refer to Power Take-Off Installations page for information.
7. The 7.3L DI Turbo Diesel engine requires an auxiliary power train control module to elevate idle. An Auxiliary Idle Control Kit is described on page 196-198, which satisfies the Ford Standard Corporate Protocol serial data communication link required. Do not tap into the electrical circuits attached to the Pedal Position Sensor (PPS) or the Idle Position Switch (IPS) on the accelerator control. Do not bypass the electrical circuits attached to the PPS or IPS. See figure below for component identification.

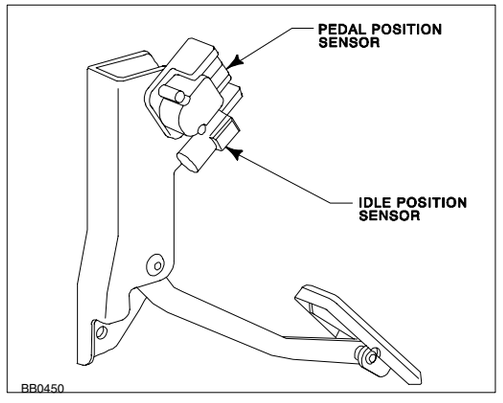

ELECTRONIC ACCELERATOR CONTROL

8. Installation of a gasoline engine speed governor is permissible, provided the governor design is compatible with each respective throttle body for the individual engine application and it does not exceed specified engine maximum RPM. It must also meet all noise and engine emission requirements. Governor installations may affect electronically controlled transmissions. Contact Ford Truck Body Builders Advisory Service before installing.

DRIVELINE

1. Bulletin Q-14, "Guidelines for Modifying Truck Drivelines," is available on www.fleet.ford.com/truckbbas/. Any deviation from Ford specifications may adversely affect powertrain system operation including engine and transmission, or component reliability. Subsequent stage manufacturers or installers are responsible to maintain Ford specifications in the completion of such modifications.
2. Rear axle vent and hose, if installed, must not be bent, pinched, or obstructed so that normal "breathing" of the rear axle is provided.
3. On all rear axle assemblies, additional bracket bars or supports must not be welded to the axle assembly. Attachment of any equalizing-type trailer hitch or auxiliary suspension systems (springs) must not be attached to the rear axle assembly.

TRANSMISSION

1. The transmission oil filler tube and dipstick must not be altered by bending, lengthening, or shortening, and must be readily accessible in the engine compartment for checking lubricant level. **NEVER ATTACH ANY COMPONENT TO THE TRANSMISSION FILLER AND DIPSTICK TUBE.**
2. The installed engine angle must not be altered. The relative position of engine and transmission to shift linkage must not be altered.
3. Transmission vent must not be altered, pinched, or collapsed, and the vent opening must not be restricted or relocated.
4. Adequate tool clearance and suitable access openings for transmission adjustments must be provided. Transmission removal provisions must also be considered.
5. Transmission oil cooler lines should not be kinked, bent, or restricted. All oil cooler lines must be properly retained with adequate clips. The truck type external oil cooler must not be "boxed in", which would restrict adequate air circulation. Use only Ford factory coolers.

Some automatic transmissions are equipped with "Stand Alone" transmissions fluid coolers. Vehicles equipped with this new oil to air cooler (OTA) may not have a transmission fluid cooler in the radiator. The OTA is located in front of the radiator and will require replacement every time the transmission is reworked or replaced. The cooler lines and Cooler Bypass Valve (CBV) must also be cleaned and backflushed.

CAUTION:
FAILURE TO REPLACE THE OTA, BACKFLUSH THE COOLER LINES AND CBV MAY RESULT IN TRANSMISSION ASSEMBLY INTERNAL DAMAGE.

6. Transmission shift cable, transmission outer shift lever, and shift cable bracket must not be altered and must have provisions for adjusting tool clearance. A severe duty shift cable (booted) is available as a service part from a Ford Dealer, for Super Duty F-Series vehicles which experience extensive off-road use.
7. Some automatic transmissions may be equipped with a transmission cooler bypass system. The purpose of the cooler bypass valve is to allow some transmission fluid to bypass the transmission fluid coolers and return to the transmission sump during cold weather operation. This provides a faster transmission fluid warm up and increased lube flow during cold weather operation. Do not remove or modify this system or transmission damage may occur. Do not use the cooler bypass line as a fitting point. Vehicles equipped with transmission cooler bypass will NOT have a hot water feed circuit from the water pump to the radiator tank containing the transmission cooler.

CAUTION:
DO NOT USE THE COOLER BYPASS VALVE (CBV) AS A HANDLE. DAMAGE TO THE CBV AND TRANSMISSION MAY RESULT. THIS ALSO CAUSES LEAKS.

8. Transmission service identification tags must not be removed or destroyed. If the transmission is reworked or replaced, the tag should be attached to new transmission.
9. Electronically controlled automatic transmission wire harness routing location, wire harness locating clips, all heat shielding, and clearance to the exhaust must be maintained as installed from the assembly plant.
10. The manual transmission filler plug should not be obstructed, preventing easy checking of lube level or filling.
11. Body structures should not be less than 1.00 inch from the rectangular vent holes on the top surface of the manual transmission housing.
12. Bulletin Q-14 and Q-18 contain additional detailed information on modifications which may affect transmissions. To obtain a copy, log on to www.fleet.ford.com/truckbbas/ and select from the list of bulletins.

FRAME

1. Holes that would weaken the frame sidemember should not be drilled in the frame. Holes are **not** to be drilled in the sidemember's top or bottom flange.
2. Holes to mount brackets, out-riggers, and supports, may be drilled in the vertical frame side rail web with the following restrictions:

- Material between edge of hole and inside of upper or lower flange must not be less than 1.50 inch for low carbon steel (36,000 PSI yield).
- The minimum edge distance between any two holes up to 0.625 inch diameter must be 1.00 inch. For larger than 0.625 inch diameter holes, the minimum edge distance must be 1.5 times the diameter of the largest hole.
- 0.75 inch is maximum hole diameter.
- Avoid close vertical succession of fasteners.
- All attaching fasteners, including flat washers, must be of high strength steel (Grade 8).

3. When welding is performed anywhere on the vehicle, precautionary measures should be taken to prevent damage to electrical system wiring or components. Prior to welding, any parts which could be damaged by excessive temperatures should be removed or adequately shielded. Also, prior to welding, disconnect both batteries, then the ABS module, then the PCM. The welding ground clamp should be positioned as close to the affected welding area as possible. Computer processors should be removed if welding is to be done within their close proximity. Welding cables should never be allowed to lay on, near, or across any electrical wiring or electronic component during welding. After welding, when parts are cool, carefully inspect wiring and electrical components for shorts or other damage which could draw excessive currents and possibly cause an electrical system short when the battery is reconnected.
4. When welding low carbon steel side rails (36,000 PSI yield strength), emphasis should be placed upon weld application techniques to avoid stress risers that may adversely affect frame operating stresses. When welding within 4 inches of any crossmember rivet, remove the rivets and replace with Grade 8 bolts and nuts.
5. Do not modify or alter the convoluted frame sections in the area behind the front bumper. Modifications or alterations could have an adverse effect on vehicle performance in a crash situation.
6. Wheelbase alteration and frame extension guidelines for and E-Series Super Duty Cutaway are available in Bulletin Q-18, log on to www.fleet.ford.com/truckbbas/ and select from the list of bulletins. Any deviation from the original vehicle specification will become the responsibility of the subsequent stage manufacturer or installer. This may affect transmission operation and durability.
7. Recommend the use of OEM front tow hooks only. See *Ford Towing Manual* FCS-12141-00 for towing instructions.
8. To prevent collapse of the frame side rail flanges, when U-bolts are used for the attachment of bodies to the truck chassis, vertical spacer bars must be used between the upper and lower flanges at each U-bolt.
9. All E-Series Super Duty Cutaways or Stripped Chassis with a 176-inch WB and equipped with a 55-gallon fuel tank will require an 18-inch minimum frame extension to provide for an adequate departure angle fuel tank clearance.
10. School bus rear bumpers should meet the following recommended minimum specifications; height, 203.2 [8.00] under 10,000 lbs and 241.3 [9.50] over 10,000 lbs; 50.8 [2.00] upper and lower flange; 304.8 [12.00] wrap-around; 4.8 [.187] thick. See the *Incomplete Vehicle Manual* for additional information.

JACK

1. Jacks, if installed, must be stowed in an adequate location for customer access.

AMBULANCE BUILDER GUIDELINES

A FORD VEHICLE IS SUITABLE FOR MANUFACTURE INTO AN AMBULANCE ONLY IF EQUIPPED WITH A FORD AMBULANCE PREPARATION PACKAGE. FORD URGES AMBULANCE MANUFACTURERS TO FOLLOW THE RECOMMENDATIONS FURNISHED IN THE *INCOMPLETE VEHICLE MANUAL*, (AND ANY PERTINENT SUPPLEMENTS), AND THE QUALIFIED VEHICLE MODIFIER (QVM) GUIDELINES.

USING A FORD VEHICLE WITHOUT THE FORD AMBULANCE PREPARATION PACKAGE TO PRODUCE AN AMBULANCE VOIDS THE FORD WARRANTY AND COULD RESULT IN ELEVATED UNDERBODY TEMPERATURES, FUEL OVER-PRESSURIZATION AND THE RISK OF FUEL EXPULSION AND FIRES.

VEHICLES EQUIPPED WITH FORD AMBULANCE PREPARATION PACKAGES HAVE LABELS LOCATED ON (THE INSIDE) DRIVER DOOR LOCK PILLAR THAT STATE THAT THE VEHICLE IS SO EQUIPPED.

INFORMATION

Ford urges careful consideration of the recommendations that follow. They are based on analyses of component and vehicle tests, actual service situations, and engineering judgments. Disregard of these recommendations may affect the durability, reliability, handling and performance characteristics of a completed vehicle and may elevate underbody temperatures and increase the potential for fire, or may affect the safety of the occupants in the event of an accident.

These recommendations are supplemental to U.S. and Canadian Motor Vehicle Safety compliance representations provided in the *Incomplete Vehicle Manual*. Additional information is also provided in this book and *Ford Truck Shop Manual* which may be helpful to subsequent stage manufacturers.

Subsequent stage manufacturers are encouraged to contact the Ford Truck Body Builder Advisory Service if they have any questions concerning these recommendations.

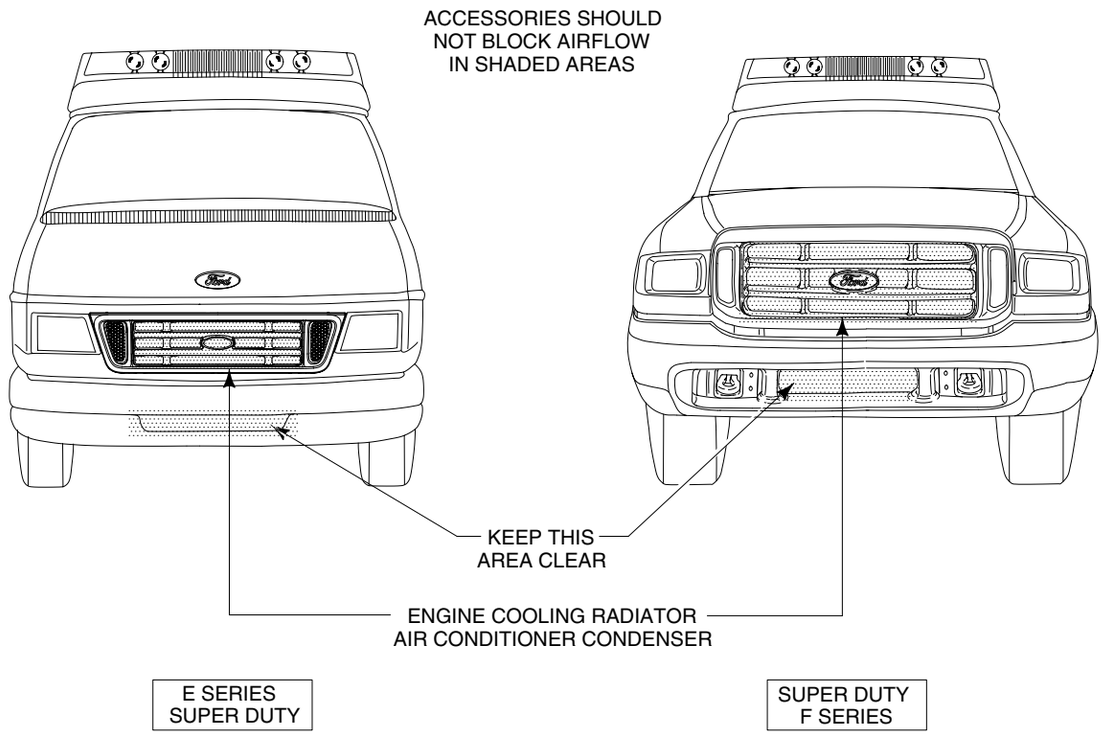

BB0485 2003

GUIDELINES

1. All Exhaust System and Underbody Heat Management statements on pages 218 and 231 respectively, apply to completed ambulance type vehicles.
2. Data concerning the effect of hood louvers is inconclusive. If a body builder chooses to add them, the opening should be directed rearward to avoid recirculating discharged hot air through the radiator.

NOTE: The vehicle interior vent air enters the passenger compartment at the base of the windshield. Louvers may direct heated air or fumes toward this opening. Removal of the underhood insulation may affect Exterior Noise compliance. See the Exterior Noise information on Safety/Emissions pages 43-44.

3. To deal with higher electrical loads, Ford vehicles with the Ambulance Prep Package are equipped with dual 115 ampere alternators, dual batteries and heavy duty wiring to handle higher electrical loads. Added wiring should be of sufficient capacity to handle the higher current. The alternator should not be modified, altered or replaced.
4. Added Second Unit Body vents, especially powered vents, should be located away from the fuel filler, fuel venting areas and exhaust to avoid fuel fumes and vapors entering the interior of the vehicle.
5. Equipment such as flashing lights and sirens, spare tire, or any other accessories should not be installed in the grille area forward of the radiator or air cleaner air inlet. Doing so restricts proper airflow through the radiator and engine compartment. Lights, speakers, or sirens should not be mounted in the center area of the grille. Equipment should be mounted as far outboard as possible, not to exceed 90 square inches each or 180 square inches combined in area.
6. An ambulance is not to be used as a tow vehicle.

NEW VEHICLE STORAGE GUIDELINES

GENERAL

- Store vehicles in a dry, ventilated place; protect from sunlight if possible.
- If vehicles are stored outside, provide regular maintenance against rust and damage.

BODY

- Wash vehicle thoroughly to remove dirt, grease, oil, tar, or mud from exterior surfaces, rear wheel housing, and underside of front fender.
- Periodically wash vehicles stored in exposed locations.
- Touch up exposed raw or primed metal to provide rust protection.
- Cover chrome and stainless steel parts with a thick coat of auto wax to prevent discoloration. Rewax as necessary when the vehicle is washed.
- Lubricate all hoods, door hinges and latches with a light grade oil.

  CAUTION: Keep all rubber parts free from oil and solvents.
- Cover the interior soft trim to prevent fading, if stored in exposed location.

ENGINE

- Start the engine every 15 days and move the vehicle at least 25 feet. Run it al fast idle until it reaches normal operating temperature.
- Shift the transmission into all gears while engine is running.

FUEL SYSTEM

- Regularly move vehicles short distances to mix fuel anti-oxidation agents.

NOTE: During extended periods, if vehicle is stored for 60 days or more, gasoline may deteriorate due to oxidation. This can damage rubbers and other polymers in the fuel systems such as fuel pressure regulator diaphragms and fuel line connector seals. It may also clog small orifices. Diesel fuel deterioration in the form of fuel separation, sludge formation, and bacterial growth can cause restrictions in fuel supply lines, filters and sticking of fuel injection systems components.

A commercially available gasoline fuel stabilizer (“Sta-Bil” or equivalent) should be added to gasoline-powered vehicles or a diesel fuel stabilizer (“Fire Prep 100” or equivalent) to diesel-powered vehicles whenever actual or expected storage periods exceed 60 days. The manufacturer’s instructions packaged with product should be followed. The vehicles should then be operated at an idle speed to circulate the additive throughout the fuel system.

A volatile, corrosion inhibitor (NOx Rust VCI 105” or equivalent) added to the fuel will protect the fuel tank inner surface from corrosion. Follow instructions packaged with product.

E-SERIES TEMPORARY 7.5 GALLON FUEL TANK

Vehicles equipped with a 7.5 gallon temporary fuel tank (for transit shipping only) will require the subsequent stage manufacturer to dispose of this tank in an appropriate manner. The permanent aft-of-axle tank requires a 10-gallon minimum initial fuel fill to dilute the Ford-provided anti-corrosion solution in the tank.

COOLING SYSTEM

- Maintain appropriate antifreeze protection against freezing temperatures.
- Only use coolant compatible with that installed at the Ford Assembly Plant.

BATTERY

- Check and recharge as necessary.
- Keep connections clean and covered with light coat of grease.

BRAKES

- Make sure brakes and the parking brake are fully released.

TIRES

- Maintain recommended air pressures.

MISCELLANEOUS

- Verify that all linkages, cables, clevis pins, and levers under the vehicle are covered with grease to prevent rust.
- Move trucks at least 25 feet every 15 days to lubricate working parts and prevent corrosion.

TRANSMISSION

- Run engine to normal operating temperature.
- Shift the transmission into all gears with engine running.
- Check fluid level and condition (no water contamination, etc.).
- Stripped Chassis vehicles – cover transmission to prevent water from entering through the vent.